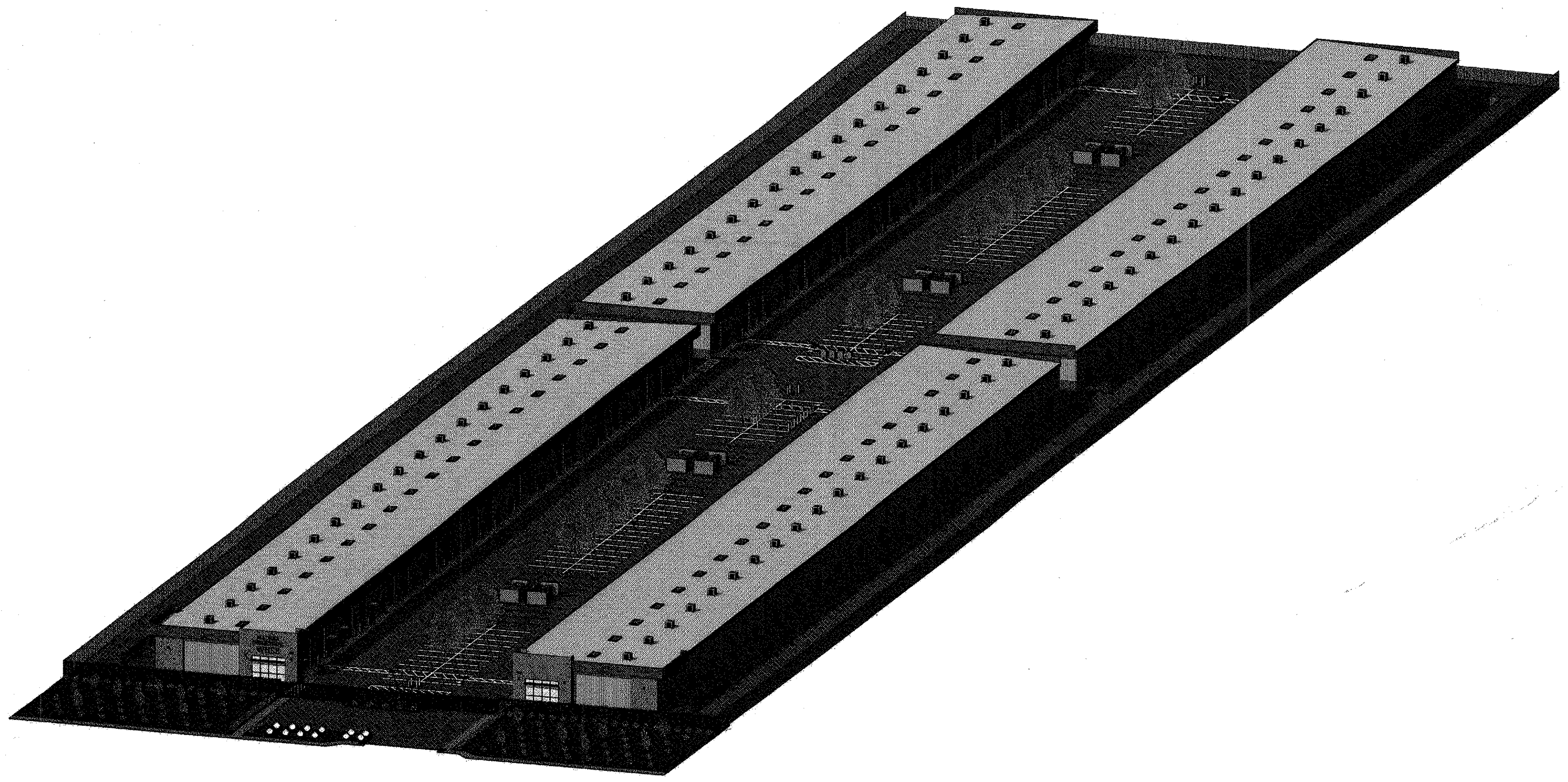

LEASE FLEX / WAREHOUSE BUILDINGS

AT

325 (BUILDING A)
345 (BUILDING B)
335 (BUILDING C)
355 (BUILDING D)
S SCHNOOR AVE., MADERA, CA

FOR

MADERA INDUSTRIAL WHSE, LLC

1967 N GATEWAY BLVD., SUITE 102
FRESNO, CA 93727

SHEET LIST BY DISCIPLINE

SHEET NUMBER	SHEET TITLE	ISSUE DATE	CURRENT REVISION	REVISION DATE
COVER SHEET				
CS1.0	COVER SHEET	9/17/2021	2	11/17/2021
CIVIL (FOR REFERENCE ONLY)				
C-1	COVER SHEET	9/3/2021		
C-2	GRADING PLAN	9/3/2021		
C-3	GRADING PLAN DETAILS	9/3/2021		
C-4	UTILITY PLAN	9/3/2021		
C-5	EROSION CONTROL PLAN	9/3/2021		
LANDSCAPE				
L1.0	LANDSCAPE SPECIFICATIONS	9/7/2021		
L2.0	IRRIGATION PLAN	9/7/2021		
L2.1	IRRIGATION PLAN	9/7/2021		
L3.0	PLANTING PLAN	9/7/2021		
L3.1	PLANTING PLAN	9/7/2021		
L4.0	LANDSCAPE DETAILS	9/7/2021		
GENERAL				
G1.0	EGRESS PLAN AND CODE SUMMARY	9/17/2021	2	11/17/2021
G2.0	MISC. ACCESSIBILITY DETAILS	9/17/2021		
G2.1	MISC. ACCESSIBILITY DETAILS (CONT.)	9/17/2021		
G2.2	MISC. ACCESSIBLITY DETAILS (CONT.)	9/17/2021		
G3.0	CALGREEN (SHEET 1 OF 3)	11/17/2021		
G3.1	CALGREEN (SHEET 2 OF 3)	11/17/2021		
G3.2	CALGREEN (SHEET 3 OF 3)	11/17/2021		
ARCHITECTURAL				
A1.0	SITE PLAN	9/17/2021	2	11/17/2021
A1.1	MISC. SITE DETAILS	9/17/2021		
A1.2	FIRE SITE PLAN	11/17/2021	2	11/17/2021
A2.0A	FLOOR PLAN - BLDG. A	9/17/2021		
A2.0B	FLOOR PLAN - BLDG. B	9/17/2021		
A2.0C	FLOOR PLAN - BLDG. C	9/17/2021		
A2.0D	FLOOR PLAN - BLDG. D	9/17/2021		
A2.1	TYPICAL ACCESSIBLE RESTROOM DETAILS	9/17/2021		
A3.0A	ROOF PLAN - BLDG. A	9/17/2021	2	11/17/2021
A3.0B	ROOF PLAN - BLDG. B	9/17/2021	2	11/17/2021
A3.0C	ROOF PLAN - BLDG. C	9/17/2021	2	11/17/2021
A3.0D	ROOF PLAN - BLDG. D	9/17/2021	2	11/17/2021
A5.0A	EXTERIOR ELEVATIONS - BLDG. A	9/17/2021	2	11/17/2021
A5.0B	EXTERIOR ELEVATIONS - BLDG. B	9/17/2021	2	11/17/2021
A5.0C	EXTERIOR ELEVATIONS - BLDG. C	9/17/2021		
A5.0D	EXTERIOR ELEVATIONS - BLDG. D	9/17/2021		
A5.1	PROJECT ISOMETRIC VIEWS	9/17/2021	2	11/17/2021
A5.2	TYPICAL BLDG. SECTION	11/17/2021	2	11/17/2021
A6.0	DETAILS	9/17/2021	2	11/17/2021
A7.0	STUD FRAMING PLANS	9/17/2021		
A7.1	FRAMING DETAILS	9/17/2021		
A7.2	FRAMING DETAILS (CONT.)	9/17/2021		
STRUCTURAL				
S1.0	GENERAL NOTES	9/17/2021		
S2.0A	FOUNDATION PLAN	9/17/2021	2	11/17/2021
S2.0B	FOUNDATION PLAN	9/17/2021	2	11/17/2021
S2.0C	FOUNDATION PLAN	9/17/2021	2	11/17/2021
S2.0D	FOUNDATION PLAN	9/17/2021	2	11/17/2021
S2.1	CONTROL JOINT PLAN	9/17/2021		
S3.0	SECTIONS AND DETAILS	9/17/2021		
S3.1	FOUNDATION DETAILS	9/17/2021		
S3.2	LOADING DOCK DETAILS	9/17/2021		
MECHANICAL				
M1	MECHANICAL SITE PLAN	9/9/2021		
M2	TYP. MECHANICAL FLOOR PLAN	9/9/2021		
M3	ENERGY CALCULATIONS	9/9/2021		
M4	ENERGY CALCULATIONS (CONT.)	09/20/21		
M5	ENERGY CALCULATIONS (CONT.)	09/20/21		
M6	ENERGY CALCULATIONS (CONT.)	09/20/21		
M7	ENERGY CALCULATIONS (CONT.)	09/20/21		
M8	ENERGY CALCULATIONS (CONT.)	09/20/21		
M9	ENERGY CALCULATIONS (CONT.)	09/20/21		
M10	ENERGY CALCULATIONS (CONT.)	09/20/21		
M11	ENERGY CALCULATIONS (CONT.)	09/20/21		
M12	ENERGY CALCULATIONS (CONT.)	09/20/21		
ELECTRICAL				
E1	ELECTRICAL SITE PLAN	9/8/2021		
E2	ELECTRICAL PLAN	9/8/2021		
E3	LIGHTING SPECS	9/8/2021		
E4	LIGHTING SPECS	9/8/2021		
E5	TITLE 24	11/17/2021		
E6	TITLE 24 (CONT.)	11/17/2021		
E7	EGRESS PLAN	11/30/21		
PLUMBING				
P-1.0	GENERAL NOTES AND DETAILS	9/14/2021		
P-2.0A	BUILDING A PLUMBING PLAN	09/17/21		
P-3.0B	BUILDING B PLUMBING PLAN	09/17/21		
P-4.0C	BUILDING C PLUMBING PLAN	09/17/21		
P-5.0D	BUILDING D PLUMBING PLAN	09/17/21		
PRE-ENGINEERED METAL BUILDING				
1	BUILDING A PERMIT DRAWINGS (47 PAGES)	9/16/2021		
2	BUILDING B PERMIT DRAWINGS (47 PAGES)	11/24/2021		
3	BUILDING C PERMIT DRAWINGS (60 PAGES)	10/5/2021		
4	BUILDING D PERMIT DRAWINGS (60 PAGES)	10/13/2021		

PROJECT DATA:

PROJECT NAME: LEASE FLEX / WAREHOUSE BUILDINGS

SCOPE OF WORK: NEW LEASEABLE WAREHOUSE / FLEX SPACES FOR LIGHT INDUSTRIAL USE CONFORMING TO THE USES PERMITTED. CONSISTS OF 74 UNITS AT 1,950 SF EACH W/ INCIDENTAL OFFICE / ADMIN. AREA. THIS PROJECT WILL DEVELOP APPROX. 9.0 ACRES OF THE TOTAL 16.57 ACRE PARCEL (NOT INCLUDING THE REQUIRED INFILTRATION POND AT THE NORTHEAST CORNER OF THE SITE).

JURISDICTION: CITY OF MADERA

ASSESSOR'S PARCEL NO.S: 009-330-011 (16.57 ACRES)

ZONING: I (INDUSTRIAL)

GOVERNING CODES:
2019 CALIFORNIA BUILDING CODE
2019 CALIFORNIA FIRE CODE
2019 CALIFORNIA PLUMBING CODE
2019 CALIFORNIA MECHANICAL CODE
2019 CALIFORNIA ELECTRICAL CODE
2019 CALIFORNIA ENERGY CODE
APPLICABLE ORDINANCES AND AMMENDMENTS BY THE CITY OF MADERA

HIGH FIRE HAZARD SEVERITY ZONE:
PROJECT LOCATION IS NOT IN A "VERY HIGH FIRE SEVERITY ZONE".

LEGAL DESCRIPTION:

LOTS 13 AND 14 OF MIDVALE COLONY, IN THE CITY OF MADERA, STATE OF CALIFORNIA, ACCORDING TO THE MAP THEREOF RECORDED APRIL 8, 1909 IN BOOK 2, PAGE 18 OF MAPS, IN THE OFFICE OF THE COUNTY RECORDER OF SAID COUNTY.

EXCEPTING THEREFROM THE SOUTH 675.0 FEET OF LOTS 13 AND 14, INCLUDING THE 30 FOOT ROAD ON THE SOUTH, ACCORDING TO THE MAP OF SAID MIDVALE COLONY REFERRED TO ABOVE.

ALSO EXCEPTING THEREFROM THAT PORTION CONVEYED TO THE CITY OF MADERA, A MUNICIPAL CORPORATION IN DEED RECORDED JULY 12, 2004 AS INTRUMENT NO. 2004029511 AND RE-RECORDED JANUARY 7, 2005 AS INTRUMENT NO. 2005000957, BOTH OF OFFICIAL RECORDS.

ALSO EXCEPTING THEREFROM ONE-HALF OF ALL OIL, GAS AND MINERALS IN AND UNDER SAID LAND, AS RESERVED BY CALIFORNIA LANDS, INC., A CORPORATION, IN DEED RECORDED JANUARY 26, 1935 IN BOOK 168, PAGE 112 AND AS MODIFIED BY QUITCLAIM DEED RECORDED MARCH 9, 1953 IN BOOK 567, PAGE 582, BOTH OF OFFICIAL RECORDS.

OCCUPANCY CLASSES AND CONSTRUCTION TYPES:

NEW SINGLE STORY PRE-ENGINEERED METAL BUILDINGS (PEMB) FOR FLEX / WAREHOUSE SPACES TO BE LEASED TO TENANTS NOT ENGAGED IN HIGH PILE STORAGE OR OPERATIONS THAT WILL UTILIZE HAZARDOUS MATERIALS IN EXCESS OF THE MAXIMUM ALLOWABLE QUANTITIES OF HAZARDOUS MATERIALS LIST IN TABLE 307.1(1) PER CBC SECTION 311.2

OCCUPANCY CLASS: S-1 / B (NONSEPARATED OCCUPANCIES)

CONSTRUCTION TYPE: II-B, FULLY SPRINKLERED - ONE STORY

FLOOR AREA PROVIDED:
37,050 SF (BLDG. A)
37,050 SF (BLDG. B)
35,100 SF (BLDG. C)
+ 35,100 SF (BLDG. D)
144,300 SF TOTAL
2

12/5/2021 11:17:35 PM

G:\Shared drives\DBKOmpany\PROJECTS\20106_WHSE Partners-Fresno, CA\Plans, Calcs & Specs\Arch-Struct (DBKO)\Drawings\Franco Property - Madera\20106 -WP - Franco-Madera_2021-11-17.rvt

PROJECT NOTES:

GENERAL CONDITIONS

1. ALL WORK INCLUDED UNDER THIS PROJECT WILL COMPLY WITH THE 2019 CALIFORNIA BUILDING CODE.
2. ALL SUBCONTRACTORS SHALL VISIT THE SITE AND VERIFY ALL DIMENSIONS PRIOR TO SUBMISSION OF ANY BIDS OR COMMENCEMENT OF WORK. NOTIFY DBKO OF ANY DISCREPANCIES. OBTAIN ALL REQUIRED PERMITS, APPROVALS, LICENSES.
3. ALL HEIGHTS AND ELEVATIONS SHALL BE MEASURED FROM FINISHED FLOOR UNLESS NOTED OTHERWISE.
4. OVERLAPPING AND CONFLICTING REQUIREMENTS - WHERE COMPLIANCE WITH TWO (2) OR MORE INDUSTRY STANDARDS OR SETS OF REQUIREMENTS IS SPECIFIED, AND OVERLAPPING OF THOSE DIFFERENT STANDARDS OR REQUIREMENTS ESTABLISHES DIFFERENT OR CONFLICTING MINIMUMS OR LEVELS OF QUALITY, THE MOST STRINGENT IS THE INTENDED STANDARD AND IS THE ONE THAT SHALL BE ENFORCED, UNLESS SPECIFICALLY NOTED OTHERWISE. BRING DIFFERENT BUT OTHERWISE APPARENTLY EQUAL STANDARDS TO DBKO BEFORE PROCEEDING.
5. ALL CONSTRUCTION SHALL BE DONE WITH MATERIALS, METHODS, AND WORKMANSHIP ACCEPTED AS GOOD PRACTICE BY THE CONSTRUCTION INDUSTRY AND IN CONFORMANCE WITH THE PROVISIONS OF THE CBC AND STANDARDS REFERENCED THEREIN.
6. MINIMUM QUALITY/QUANITITY - IN EVERY INSTANCE, QUALITY LEVEL OR QUANTITY SHOWN OR SPECIFIED IS INTENDED AS THE MINIMUM FOR THE WORK TO BE PERFORMED OR PROVIDED. EXCEPT AS NOTED OTHERWISE, ACTUAL WORK MAY EITHER COMPLY EXACTLY WITH THAT MINIMUM OR MAY EXCEED THAT MINIMUM WITHIN REASONABLE LIMITS. IN COMPLYING WITH REQUIREMENTS, INDICATED NUMERICAL VALUES ARE EITHER MINIMUMS OR MAXIMUMS AS NOTED OR AS APPROPRIATE FOR THE CONTEXT GIVEN. BRING INSTANCES OF UNCERTAINTY TO THE ATTENTION OF THE ENGINEER BEFORE PROCEEDING WITH THAT WORK.
7. WHERE CONTRACT DOCUMENTS (DRAWINGS OR SPECIFICATIONS) ARE INCOMPLETE, AMBIGUOUS OR CONTAIN CONFLICTING INSTRUCTIONS, DO NOT PROCEED UNTIL RECEIVING CLARIFICATION FROM DBKO IN WRITING.
8. THIS PROJECT HAS BEEN DESIGNED FOR A UNIFORM LOAD OF 2 PSF TO SUPPORT THE ADDED LOADS OF A FIRE SPRINKLER SYSTEM.

JOBSITE SAFETY

1. THE DESIGN TEAM HAS NOT BEEN RETAINED OR COMPENSATED TO PROVIDE DESIGN AND/OR CONSTRUCTION REVIEW SERVICES RELATED TO THE CONTRACTOR'S SAFETY PRECAUTIONS OR TO MEANS, METHODS, TECHNIQUES, SEQUENCES OR PROCEDURES FOR THE CONTRACTOR TO PERFORM HIS WORK. THE UNDERTAKING OF PERIODIC SITE VISITS BY THE ENGINEER SHALL NOT BE CONSTRUED AS SUPERVISION OF ACTUAL CONSTRUCTION NOR MAKE HIM RESPONSIBLE FOR PROVIDING A SAFE PLACE FOR THE PERFORMANCE OF WORK BY THE CONTRACTOR, SUBCONTRACTORS, SUPPLIERS OR THEIR EMPLOYEES, OR FOR ACCESS, VISITS, USE, WORK, TRAVEL, OR OCCUPANCY BY ANY PERSON.
2. LOCATE ALL EXISTING UTILITIES BEFORE DIGGING, EXCAVATING OR DRIVING PILES. NOTIFY ENGINEER WITH CONFLICTS. CONTRACTOR WILL BE RESPONSIBLE FOR ALL DAMAGE TO EXISTING UTILITIES AND WILL BE REPAIRED AT CONTRACTOR'S EXPENSE TO THE SATISFACTION OF THE DBKO.

VICINITY MAP:

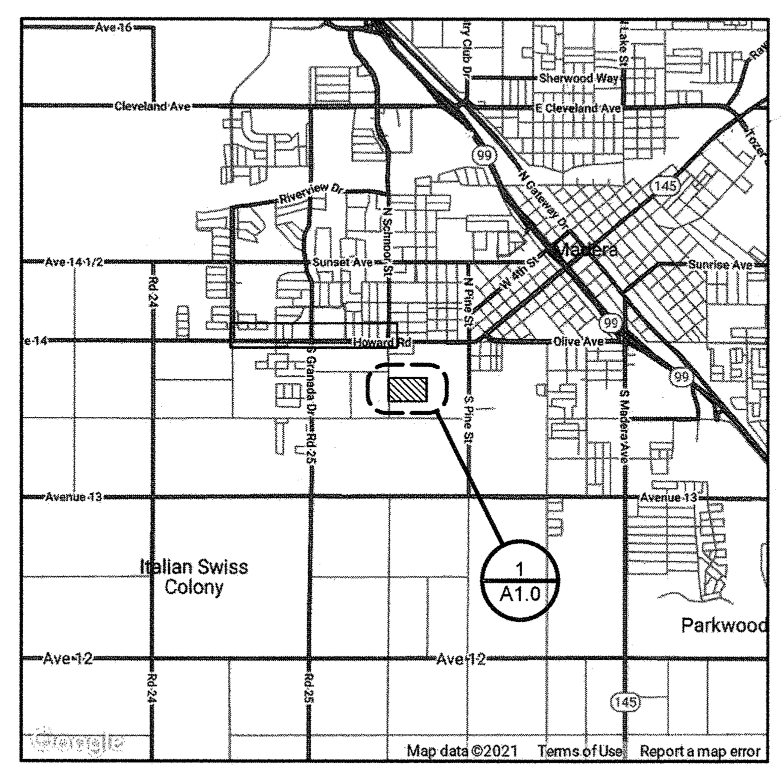

DEFERRED SUBMITTALS:

ALL DEFERRED SUBMITTAL ITEMS ARE NOT TO BE INSTALLED UNTIL THE BUILDING OFFICIAL HAS REVIEWED AND APPROVED THE SUBMITTALS.

DEFFERED SUBMITTAL APPROVAL IS REQUIRED FOR THE FOLLOWING:

1. FIRE SPRINKLER SYSTEM
2. FIRE ALARM
3. UNDERGROUND FIRE MAIN
4. BUILDING-MOUNTED AND MONUMENT SIGNAGE

2

OWNER:

MADERA INDUSTRIAL WHSE, LLC
1967 N GATEWAY BLVD., SUITE 102
FRESNO, CA 93727

CONTACT: ERIN VOLPP
erin@whsepartners.com
(310) 429-0051

PROJECT TEAM:

GENERAL CONTRACTOR:

DBKO DESIGN-BUILD
3406 VIA LIDO STE 1A #24
NEWPORT BEACH, CA 92663

CONTACT: FRANK FLORES
frankf@dbkompany.com
(559) 907-6176

STRUCTURAL ENGINEER:

DBKO DESIGN+BUILD
3406 VIA LIDO STE 1A #24
NEWPORT BEACH, CA 92663

CONTACT: ROB TAMACCIO, S.E.
robt@dbkompany.com
(619) 307-9770

CIVIL ENGINEER

PRECISION CIVIL ENGINEERING, INC.
1234 O STREET
FRESNO, CA 93721

CONTACT: CHRISTIAN GONZALES
cgonzales@precisioneng.net
(559) 449-4500

MECHANICAL

VALLEY AIR CONDITIONING & REPAIR
825 S TOPEKA AVE
FRESNO, CA 93721

CONTACT: STEVE MENDRIN
smendrin@valleyairrepair.com
(559) 237-3188

ELECTRICAL

PERFORMANCE ELECTRIC
11206 AVENUE 264
VISALIA, CA 93277

CONTACT: TOM DUKES
elect28@msn.com
(559) 631.1000

PLUMBING

GT PLUMBING
5405 E HAMPTON WAY
FRESNO, CA 93727

CONTACT: TONY GAITAN
tonygaitan@outlook.com
(559) 779-9665

LANDSCAPING

RIVERSIDE LANDSCAPE & NURSERY
4763 W SPRUCE AVE., STE #111
FRESNO, CA 93722

CONTACT: MITCHEL HUTCHENSON
mail@riversidelandscape.com
(559) 275-1891

2019CBC
City of Madera
Building Department
The approval of these plans does not prevent the City of Madera from requiring correction of errors or omissions in the plans, specifications or construction. Subject to field inspections and approval. Laws, Codes and Ordinances
APPROVED
By:
Date: MAR 0 3 2022
2019CBC

DBKO
DESIGN BUILD

RECEIVED
DEC 1 6 2021
BUILDING DEPARTMENT

WHSE PARTNERS

RECEIVED
MAR 0 1 2022
CITY OF MADERA
BUILDING DEPARTMENT

DATE	BY	REVISION
11/17/2021	2	PLAN CHECK RESPONSE

ANY INFORMATION OR DATA ON THIS DRAWING IS NOT INTENDED TO BE SUITABLE FOR REUSE BY ANY PERSON, FIRM, CORPORATION, OR ANY OTHERS ON EXTENSIONS OF THIS PROJECT OR FOR ANY USE ON ANY OTHER PROJECT. ANY REUSE WITHOUT WRITTEN VERIFICATION AND ADAPTATION BY THE ENGINEER FOR THE SPECIFIC PURPOSE INTENDED WILL BE AT THE USER'S SOLE RISK AND WITHOUT LIABILITY OR LEGAL EXPOSURE TO THE ENGINEER.

SEAL
REGISTERED PROFESSIONAL ENGINEER
ROBERT A. TAMACCIO
S5607
STRUCTURAL
STATE OF CALIFORNIA
11/17/2021

JOB COPY

COVER SHEET

LEASE FLEX. / WAREHOUSE BUILDINGS
FOR
MADERA INDUSTRIAL WHSE, LLC
S. SCHNOOR AVENUE, MADERA, CA

JOB NUMBER 21107
DESIGNED BY RT
DRAWN BY LM
DATE 9/17/2021
SHEET NUMBER
CS1.0

CITY OF MADERA
CONSTRUCTION PLANS FOR SPR 2021-24:
SOUTH SCHNOOR AVENUE AND WEST ALMOND AVENUE

811 Know what's below. Call before you dig.

GENERAL NOTES:

1. THE WORK EMBRACED HEREIN SHALL BE DONE IN ACCORDANCE WITH THE APPROPRIATE PROVISION OF THE SPECIFICATIONS ENTITLED BY CITY OF MADERA, STANDARD PLANS AND SPECIFICATIONS LATEST REVISION.
2. THE CONTRACTOR SHALL SECURE AN ENCROACHMENT PERMIT FOR ANY OFF-SITE CONSTRUCTION.
3. ALL PERMITS INCLUDING ENCROACHMENT AND BARRICADE PLANS SHALL BE KEPT ON-SITE AT ALL TIMES.
4. APPLICATION FOR INSPECTION BY THE CITY OF MADERA SHALL BE MADE BY CONTRACTOR AT LEAST 24 HOURS BEFORE THE INSPECTION SERVICES WILL BE REQUIRED, 559-661-5418.
5. TWO WORKING DAYS PRIOR TO COMMENCING UTILITY EXCAVATION, THE CONTRACTOR SHALL NOTIFY UNDERGROUND SERVICES ALERT, TOLL FREE, AT 1-800-227-2600.
6. PRIOR TO ACCEPTANCE, BOND RELEASES AND A CERTIFICATE OF OCCUPANCY, A CERTIFIED LEGIBLE ASBUILT DRAWING MUST BE SUBMITTED TO THE CITY OF MADERA. AS-BUILT MUST SHOW ALL CHANGES AND ACTUAL FIELD CONDITIONS. IN THE ABSENCE OF CHANGES, A COPY OF APPROVED DRAWINGS WILL BE REQUIRED STATING "INSTALLED AS PER DRAWINGS" AND CERTIFIED AS SUCH BY THE DEVELOPER'S ENGINEER.
7. ALL CONSTRUCTION EQUIPMENT SHALL BE TUNED AND MAINTAINED IN ACCORDANCE WITH THE MANUFACTURER'S SPECIFICATIONS.
8. CONTRACTOR'S WORK CREWS SHALL SHUT OFF CONSTRUCTION EQUIPMENT WHEN NOT IN USE.

LIABILITIES

9. ANY EXISTING SECTION CORNER, QUARTER SECTION CORNER, PROPERTY CORNER, STREET CENTERLINE MONUMENT, OR ANY OFFICIAL BENCHMARK DAMAGED BY THE CONTRACTOR IN THE COURSE OF THE WORK COVERED BY THESE CONSTRUCTION PLANS, SHALL BE RESET TO THE SATISFACTION OF THE CITY ENGINEER. A LICENSED LAND SURVEYOR OR CIVIL ENGINEER LICENSED TO PERFORM LAND SURVEYING SHALL CERTIFY THE PLACEMENT OR REPLACEMENT OF ALL MONUMENTS AND BENCHMARKS IN ACCORDANCE WITH ALL LAWS, RULES AND REGULATIONS GOVERNING SUCH PLACEMENTS OR REPLACEMENTS. PLACEMENT/REPLACEMENT AND CERTIFICATION SHALL BE COMPLETED BEFORE FINAL ACCEPTANCE OF THE PROJECT/WORK BY THE CITY. BRONZE CAPS REQUIRED FOR THE INSTALLATION OF NEW OR REPLACEMENT MONUMENTS SHALL BE FURNISHED BY THE CONTRACTOR PER CITY STANDARD DRAWING NO. E-1, AND APPROVED BY THE CITY PRIOR TO INSTALLATION.
10. ANY EXISTING SIGNING, STRIPING, STENCILING, AND/OR IMPROVEMENT SHOWN ON THE PLANS TO REMAIN BUT ARE DAMAGED, DISTURBED OR FADED BY CONSTRUCTION ACTIVITIES SHALL BE REPLACED IN-KIND ACCORDANCE WITH THE CITY OF MADERA STANDARDS AND AS DIRECTED BY THE CITY ENGINEER.
11. THE CONTRACTOR SHALL NOTIFY THE CITY ENGINEERING DEPARTMENT AT (559)661-5418 AT LEAST FORTY-EIGHT (48) HOURS PRIOR TO INSTALLING OR REINSTALLING ANY SIGNS, MARKINGS, STRIPING OR STENCILING SUCH AS DIRECTIONAL ARROWS, STOPS, CROSS WALKS, ETC. DAMAGED OR FADED BY THE WORK. THE CITY ENGINEERING DEPARTMENT SHALL BE INFORMED OF ALL LOCATIONS, TYPES, DATES AND SCHEDULE OF WORK (SEE "STRIPING").

GRADING

12. ALL UTILITY POLES IN THE STREET RIGHT-OF-WAY ARE TO BE REMOVED OR RELOCATED PRIOR TO ANY PAVING.
13. ANY WELLS LOCATED IN AREAS TO BE GRADED, UNLESS OTHERWISE DIRECTED BY PLANS, ARE TO BE ABANDONED PER CITY STANDARD W-17. A CITY BUILDING PERMIT WILL BE REQUIRED FOR THIS WORK AND FEES THEREFORE SHALL BE PAID FOR BY THE CONTRACTOR.
14. ANY SEPTIC TANK, LEACH FIELD OR RELATED FACILITIES LOCATED IN AREAS TO BE GRADED, UNLESS OTHERWISE DIRECTED BY THE PLANS, SHALL BE ABANDONED PER COUNTY OF MADERA HEALTH DEPARTMENT STANDARDS. A BUILDING PERMIT WILL BE REQUIRED FOR THIS WORK AND FEES THEREFORE SHALL BE PAID FOR BY THE CONTRACTOR.
15. THE CONTRACTOR SHALL PROVIDE SOIL COMPACTION TEST REPORTS PREPARED BY AN APPROVED TESTING AGENCY FOR ALL AREAS WHERE FILL IS PLACED.
16. ALL GRADING SHALL CONFORM TO THE SOILS REPORT:
    ENGINEER: SALEM ENGINEERING GROUP, INC.
    DATE: APRIL 28, 2021
    JOB NUMBER: 1-221-0369
17. THE DEVELOPER SHALL MEET ALL REGULATIONS OF THE SAN JOAQUIN VALLEY AIR POLLUTION CONTROL DISTRICT (REGULATION VIII) CONCERNING DUST SUPPRESSION DURING CONSTRUCTION OF THE PROJECT. METHODS INCLUDE, BUT ARE NOT LIMITED TO: USE OF WATER OR CHEMICAL STABILIZERS/SUPPRESSANTS TO CONTROL DUST EMISSIONS FROM DISTURBED AREA, STOCK PILES, AND ACCESS WAYS; COVERING OR WETTING MATERIALS THAT ARE TRANSPORTED OFF-SITE; LIMIT CONSTRUCTION RELATED SPEEDS TO 15 MPH ON ALL UNPAVED AREAS; USE OF A STABILIZED CONSTRUCTION ENTRY/EXIT (E.G. 3-6 INCH AGGREGATE OR GRATES) TO MINIMIZE CARRYOUT/TRACKOUT FROM CONSTRUCTION VEHICLES ENTERING PUBLIC STREETS; AND CEASE GRADING AND EARTH MOVING DURING PERIODS OF HIGH WINDS (20 MPH OR MORE).

GRADING/BUILDINGS ON SITE

18. ALL GRADING SHALL COMPLY WITH CALIFORNIA BUILDING CODE, CURRENT EDITION.
19. THE CONTRACTOR SHALL OBTAIN A GRADING PERMIT FROM THE CITY BUILDING DEPARTMENT PRIOR TO ANY WORK, ABIDE BY ALL CONDITIONS THEREOF AND PAY PERMIT FEES. FOR PERMIT PURPOSES ONLY:

ESTIMATED GRADING AREA:	9 ACRE(S)
ESTIMATED EXCAVATION:	7,279 CY
ESTIMATED EMBANKMENT:	7,088 CY
ESTIMATED TOTAL:	191 (CUT) CY

NOTE: ESTIMATED GRADING QUANTITIES ARE "IN PLACE" NO SHRINKAGE HAS BEEN TAKEN INTO ACCOUNT.

20. A LETTER FROM THE RESPONSIBLE CIVIL ENGINEER OR LAND SURVEYOR SHALL ALSO BE SUBMITTED CERTIFYING THAT GRADING CONFORMED TO THE APPROVED GRADING PLAN.
21. THE CONTRACTOR SHALL HAVE THE COMPACTION REPORT FILED WITH THE CITY OF MADERA BUILDING DEPARTMENT FOR ANY LOT WITH SIX (6) INCHES OF MORE OF FILL PRIOR TO ISSUANCE OF A BUILDING PERMIT.
22. ALL FIR HYDRANTS ARE TO BE IN PLACE AND WORKING BEFORE BUILDING CONSTRUCTION BEGINS.
23. ALL FILL USED TO SUPPORT THE FOUNDATIONS OF ANY BUILDING OR STRUCTURE SHALL BE PLACED UNDER THE DIRECTION OF A GEO-TECHNICAL ENGINEER OR HIS QUALIFIED REPRESENTATIVE.
24. IN THE EVENT ARCHEOLOGICAL RESOURCES ARE UNEARTHED OR DISCOVERED DURING ANY CONSTRUCTION ACTIVITIES ON SITE, CONSTRUCTION ACTIVITIES SHALL CEASE AND THE COMMUNITY DEVELOPMENT DIRECTOR OR CITY ENGINEER SHALL BE NOTIFIED SO THAT PROCEDURES REQUIRED BY STATE LAW CAN BE IMPLEMENTED.
25. TEMPORARY SIGNS: PRIOR TO COMMENCING WORK ON ANY HOMES BEYOND THE TRACT MODELS, OR AS SOON AS AGGREGATE BASE (BASE ROCK) IS PLACED STREETS, WHICHEVER COMES FIRST, AT ALL INTERSECTIONS THE DEVELOPER/CONTRACTOR SHALL INSTALL TEMPORARY STREET NAME SIGNS TO THE FOLLOWING SPECIFICATIONS:
    a. TEMPORARY SIGNS SHALL BE OF STEEL OR ALUMINUM BACKING, WITH THICKNESS BETWEEN 0.060" AND 0.125".
    b. SIGN BACKING MATERIAL SHALL BE 6" IN HEIGHT.
    c. SIGNS SHALL BE REFLECTORIZED WITH BLACK LETTERS ON WHITE BACKGROUND.
    d. SIGNS SHALL INCLUDE THE STREET NAME AND BLOCK NUMBER. LETTER HEIGHT SHALL BE 4" MINIMUM; BLOCK NUMBERS SHALL BE 2" MINIMUM HEIGHT.

STREET IMPROVEMENTS

27. ALL STREETS SHALL BE SURFACED IN ACCORDANCE WITH THIS PLAN AND THE FOLLOWING SPECIFICATIONS:
    a. 6-INCH SUB GRADE AND ALL FILLS IN EXCESS OF 6 INCHES WILL BE COMPACTED IN ACCORDANCE WITH THE STATE OF CALIFORNIA, DEPARTMENT OF TRANSPORTATION, SECTION 19 OF THE STANDARD SPECIFICATIONS APRIL, 2018.
    b. AGGREGATE BASE AND SUB-BASE SHALL CONFORM TO AND BE PLACED IN ACCORDANCE WITH SECTION 12 OF THE CITY STANDARD USING CLASS 2 AGGREGATE BASE MATERIAL (MINIMUM 50 R-VALUE).
    c. ASPHALT CONCRETE, AGGREGATE BASE, AND EARTH WORK SHALL CONFORM TO SECTIONS 39, 26, AND 19 OF THE STATE STANDARD SPECIFICATIONS LATEST EDITION.
    d. ASPHALT CONCRETE SHALL BE TYPE B AND SHALL CONFORM TO THE PROVISIONS IN SECTION 39 OF THE STATE STANDARD SPECIFICATIONS, PERFORMANCE GRADED MODIFIED ASPHALTS DESIGNATED FOR THE CENTRAL VALLEY AND THESE SPECIAL PROVISIONS, EXCEPT THE ASPHALT CONCRETE MIX DESIGN AS OUTLINES IN SECTION 13-8 OF THESE SPECIFICATIONS.
    e. PAINT BINDER WILL BE AS SPECIFIED BY THE CITY ENGINEER AND SHALL CONFORM TO AND BE APPLIED IN ACCORDANCE WITH SECTION 13 OF THE CITY STANDARD SPECIFICATIONS.
28. EXISTING PAVEMENT SHALL NOT BE REMOVED UNTIL SUCH TIME AS ALL UTILITIES ARE COMPLETED AND PAVING CONTRACTOR IS READY TO REPAIR WITHIN 5 DAYS.
29. EXACT LOCATION OF ALL SAWCUT LINES SHALL BE DETERMINED IN THE FIELD BY A CITY OF MADERA INSPECTOR.
30. AT CONTRACTOR'S EXPENSE, FIELD THICKNESS MEASUREMENTS SHALL BE MADE AT A RATE OF 1 PER EVERY 300 LINEAL FEET OF ROADWAY. THE LOCATION OF FIELD TESTS SHALL BE CHOSEN BY THE INSPECTOR ON A RANDOM BASIS. THE PAVEMENT THICKNESS CRITERIA ARE LISTED BELOW:
    - IF THE AVERAGE OF ALL MEASUREMENTS MEETS OR EXCEEDS THE DESIGN THICKNESS, WITH NO CORE MORE THAN TEN (10) PERCENT LESS THAN THE DESIGN THICKNESS, THE PLACEMENT IS ACCEPTABLE.
    - IF THERE IS ONLY AN ISOLATED THIN AREA (CORE MORE THAN TEN (10) PERCENT OUT), THE LIMITS OF THE AREA SHOULD BE IDENTIFIED TO DETERMINE IF A CONSTRUCTION RESOLUTION IS NECESSARY.
    - IF THE CORE RESULTS INDICATE A CONSISTENTLY THIN SECTION, WITH NO CORE MORE THAN FIFTEEN (15) PERCENT LESS THAN THE DESIGN THICKNESS, THE CONTRACTOR SHALL PROPOSE A CONSTRUCTION RESOLUTION.
    - IF THE CORE RESULTS YIELD AN AVERAGE THICKNESS GREATER THAN THE DESIGN THICKNESS, BUT ARE ALTERNATIVELY VERY HIGH AND VERY LOW (MORE THAN TEN (10) PERCENT OUT), THE CITY ENGINEER SHALL REJECT THE PLACEMENT.
31. FOR CITY OF DEVELOPER PROJECTS ON MAJOR STREETS (ARTERIALS, COLLECTORS, EXPRESSWAYS), WHETHER NEW OR RECONSTRUCTION, THE CONTRACTOR OR THE DEVELOPER SHALL BE RESPONSIBLE TO SET MONUMENTS AT CENTERLINE INTERSECTION POINTS, ANGLE POINTS, AND BEGINNING AND END OF CURVES (BC & EC), WHERE MANHOLES OR OTHER OBSTRUCTIONS PREVENT THE INSTALLATION OF MONUMENTS AT THE PRESCRIBED LOCATIONS, MONUMENT TIES SHALL BE FURNISHED SUFFICIENT IN NUMBER TO RE-CREATE THE APPROPRIATE POINT.
32. FOR NEW DEVELOPMENT PROJECTS INVOLVING THE CONSTRUCTION OF NEW INTERIOR MINOR STREETS AND/OR BORDERING MAJOR STREETS, IN ADDITION TO THE ABOVE REQUIREMENTS, THE DEVELOPER SHALL SET MONUMENTS AT ALL PROPERTY CORNERS.
33. FOR ALL OF THE ABOVE, A LICENSED LAND SURVEYOR OR CIVIL ENGINEER LICENSED TO PERFORM LAND SURVEYING SHALL CERTIFY THE PLACEMENT OF ALL MONUMENTS IN ACCORDANCE WITH ALL LAWS, RULES AND REGULATIONS GOVERNING SUCH PLACEMENTS OR REPLACEMENTS.
34. STORM DRAINAGE FACILITIES, SANITARY SYSTEM AND HOUSE BRANCHES, TOGETHER WITH WATER MAIN, GAS MAINS AND THEIR RESPECTIVE SERVICE CONNECTIONS SHALL BE COMPLETED IN THE STREET BEFORE INSTALLATION OF THE STREET SURFACING.
35. ALL CURB AND GUTTER AND VALLEY GUTTERS SHALL BE WATER TESTED UNDER THE DIRECTION AND IN THE PRESENCE OF THE CITY INSPECTOR PRIOR TO ANY STREET OPERATION. ALL SAGS OR HUMPS SHALL BE REMOVED AND REPLACED TO THE SATISFACTION OF THE CITY.

WATER

36. WATER MAINS ARE TO BE INSTALLED AND TESTED PER CITY OF MADERA STANDARD SPECIFICATIONS SECTION 22, "WATER FACILITIES."
37. NO WATER MAIN VALVES SHALL BE CLOSED BY THE CONTRACTOR EXCEPT IN THE CASE OF AN EMERGENCY SUCH AS A BROKEN MAIN. THE CONTRACTOR SHALL NOTIFY CITY ENGINEERING DEPARTMENT AND THE CITY PUBLIC WORKS DEPARTMENT IMMEDIATELY WHENEVER A VALVE IS CLOSED OR AFTER A LINE IS BROKEN. IN ALL OTHER CASES, SUCH AS MAKING CONNECTIONS TO EXISTING MAINS, ARRANGEMENTS SHALL BE MADE A MINIMUM OF 24 HOURS IN ADVANCE WITH CITY ENGINEERING DEPARTMENT AND THE CITY PUBLIC WORKS DEPARTMENT FOR CLOSURE OF ANY VALVES.
38. TRACER WIRE SHALL BE INSTALLED WITH ALL WATER MAINS AND FIRE HYDRANT RUNS. TRACER WIRE SHALL BE BARE COPPER WIRE, TYPE TW, SIZE AWG#10 INSTALLED PER SECTION 22-3.3.
39. CONNECTIONS MADE TO EXISTING WATER MAINS SHALL BE PERFORMED BY WET TAP METHOD.
40. WHEN POLYVINYL CHLORIDE (PVC) C900 PIPE IS USED FOR WATER MAINS, A CORING CUTTER IS REQUIRED FOR EACH WET TAP. A CITY PUBLIC WORKS DEPARTMENT REPRESENTATIVE OR ENGINEERING DEPARTMENT INSPECTOR MUST BE ON SITE DURING ALL WORK ON EXISTING CITY WATER MAINS.
41. ALL 1-INCH TO 2-INCH WATER SERVICES AND METER BOXES SHALL BE LOCATED OUTSIDE OF DRIVEWAY AREAS AND INSTALLED PER MADERA STANDARD DRAWING W-9 OR W-10.
42. ALL VALVES SHALL BE LOCATED OUTSIDE OF DRIVEWAYS, VALLEY AND CURB GUTTERS.
43. PHYSICAL SEPARATION/GAPS BETWEEN WATER MAINS WILL BE REQUIRED ON NEW WATER MAINS AT CONNECTIONS TO EXISTING MAINS UNTIL THE NEW WATER MAIN IS TESTED AND APPROVED FOR CONNECTION TO ANY EXISTING WATER MAINS PER MADERA STANDARD DRAWING W-12. A CITY PUBLIC WORKS DEPARTMENT REPRESENTATIVE OR ENGINEERING DEPARTMENT INSPECTOR SHALL BE PRESENT AT ALL WATER MAIN TIE-INS.
44. ALL DEAD ENDS SHALL HAVE WATER MAIN BLOW-OFFS INSTALLED PER CITY OF MADERA STANDARD DRAWING W-28, "BLOW-OFF ASSEMBLY TYPE B."
45. ALL FLANGED DUCTILE IRON FITTINGS TO BE COATED WITH EC-244 AND WRAPPED WITH 120 MIL THICK POLYETHYLENE.
46. ALL FIRE HYDRANTS REQUIRED FOR THIS PROJECT SHALL BE IDENTIFIED AND INSTALLED PER CITY OF MADERA STANDARD W-26, "FIRE HYDRANT INSTALLATION". INSTALL BLUE REFLECTIVE MARKER PER SAME STANDARD DRAWING. FIRE SERVICE LINES WITHOUT HYDRANTS AT THE END SHALL BE EQUIPPED WITH BLOW-OFFS.
47. WATER METERS SHALL BE INSTALLED PER MADERA STANDARD DRAWING W-9, W-10, W-24, OR W-25 AS REQUIRED BY PUBLIC WORKS AND SHALL READ IN CUBIC FEET AND BE LOCATED WITHIN CITY RIGHT-OF-WAY.
48. ANY BACKFLOW PREVENTION ASSEMBLY INSTALLED SHALL BE OF AN APPROVED TYPE AND BE INSTALLED ON PRIVATE PROPERTY DOWNSTREAM AND ADJACENT TO WATER METERS BE INSTALLED PER MADERA STANDARD DRAWING W-14, W-15, OR W-16 AS REQUIRED BY PUBLIC WORKS WATER QUALITY DIVISION. THE BACKFLOW PREVENTION ASSEMBLY SHALL BE TESTED AND APPROVED BY A CITY OF MADERA APPROVED AWWA CERTIFIED TESTER WITHIN FIVE (5) DAYS OF INSTALLATION WITH THE RESULTS SENT TO THE CITY PUBLIC WORKS DEPARTMENT.
49. A SEPARATE BUILDING PERMIT IS REQUIRED FOR THE INSTALLATION OF FIRE SPRINKLER SYSTEMS IN BUILDINGS. SUCH INSTALLATIONS ARE NOT A PART OF THESE PLANS. FIRE SPRINKLER SERVICES WITH FIRE DEPARTMENT CONNECTIONS (FDC'S) SHALL HAVE RPDA BACKFLOW PREVENTERS PER MADERA STANDARD DRAWINGS W-15.
50. BACTERIA TEST COST SHALL BE PAID BY DEVELOPER PRIOR TO ACCEPTANCE OF IMPROVEMENTS.

SEWER MAINS

51. SEWER MAINS AND LATERALS ARE TO BE INSTALLED AND TESTED PER CITY OF MADERA STANDARD SPECIFICATIONS SECTION 17, "SANITARY SEWER PIPE AND APPURTENANCES."
52. PRIOR TO THE INSTALLATION OF, AND/OR CONNECTION TO, ANY SEWERS, THE CONTRACTOR SHALL FIELD VERIFY AND COMPARE ALL EXISTING FLOWLINES WITH THOSE INDICATED ON THE APPROVED CONSTRUCTION PLANS PRIOR TO CONNECTING TO ANY EXISTING SEWER MAINS. ANY DISCREPANCIES AND/OR CONFLICTS WITH THE APPROVED PLANS SHALL IMMEDIATELY BE BROUGHT TO THE ATTENTION OF THE CITY AND THE DESIGN ENGINEER. AN ALTERNATE DESIGN SHALL BE PREPARED AND SUBMITTED TO THE CITY FOR APPROVAL PRIOR TO COMMENCEMENT OF WORK.
53. EXCEPT WHERE OTHERWISE NOTED OR APPROVED IN WRITING BY THE CITY ENGINEER, TRENCHES SHALL BE EXCAVATED ONLY AS FAR IN ADVANCE OF PIPE LAYING AS CAN BE BACKFILLED IN THE SAME DAY.
54. THE MAXIMUM TOTAL LENGTH OF OPEN TRENCH SHALL BE 600 FEET, EXCEPT WHERE APPROVED IN WRITING BY THE CITY ENGINEER.
55. EXCAVATIONS SHALL BE CONSIDERED OPEN TRENCH UNTIL ALL AGGREGATE SUB-BASE MATERIAL FOR PAVEMENT REPLACEMENT HAS BEEN PLACED AND COMPACTED.
56. WHEN A WATER LINE IS LESS THAN 12-INCHES ABOVE A SEWER MAIN, BELOW A SEWER MAIN, ABOVE OR BELOW A FORCE MAIN OR WITHIN 10 FEET HORIZONTALLY OF A SEWER MAIN, PROTECTION OF THE WATER LINE MUST BE CONSIDERED IN ACCORDANCE WITH SECTION 21-9 OF THE CITY OF MADERA STANDARD SPECIFICATIONS.
57. SAND AND GREASE INTERCEPTOR PER CITY STANDARD DRAWING S-11 SHALL BE INSTALLED WHEN IN OPINION OF PUBLIC WORKS DEPARTMENT IT IS NECESSARY FOR PROPER HANDLING OF LIQUID WASTES CONTAINING GREASE IN EXCESSIVE AMOUNTS, SAND OR OTHER HARMFUL INGREDIENTS. ALL SAND AND GREASE INTERCEPTORS SHALL BE LOCATED AS TO BE READILY AND EASILY ACCESSIBLE FOR CLEANING AND INSPECTION. ALL HOUSE LATERALS TO BE LAID TO MINIMUM 2 PERCENT SLOPE AND INSTALLED PER MADERA STANDARD DRAWING S-12.
58. SEWER MAINS ONLY TO BE LAID IN SEWER TRENCHES.
59. ALL CONTRACTORS INSTALLING SEWER MAINS THAT SEWER MAINS THAT WILL BE UNDER THE JURISDICTION OF THE CITY OF MADERA MUST BE CLASS "A", C34 CONTRACTORS.
60. A MECHANICAL PLUG OF ADEQUATE STRENGTH AND SIZE SHALL BE INSTALLED AT FIRST SEWER MANHOLE ON-SITE, UPSTREAM OF CITY SEWER MAIN CONNECTION TO PREVENT INFILTRATION INTO THE PUBLIC SEWER SYSTEM UNTIL SUCH TIME AS THE CITY AUTHORIZED ITS REMOVAL. AIR FILLED BLADDER TYPE PLUGS ARE NOT PERMITTED.

STRIPING

61. THE CONTRACTOR SHALL NOTIFY THE ENGINEERING DEPARTMENT AT LEAST 48 HOURS IN ADVANCE OF ANY WORK. ANY CHANGES TO THE APPROVED PLAN SHALL BE APPROVED BY THE CITY ENGINEER PRIOR TO ANY WORK THEREON.
62. ANY EXISTING SIGNING AND/OR BARRICADES TO BE REMOVED SHALL BE SALVAGED TO THE CITY PUBLIC WORKS YARD LOCATED AT 1030 S. GATEWAY DRIVE.
63. STRIPING TO BE REMOVED SHALL BE GROUND OFF COMPLETELY AND THE SURFACE SLURRY SEALED WITH A TYPE "II" SLURRY PRIOR TO RE-STRIPING. ANY VOIDS CREATED BY GRINDING SHALL BE FILLED BY USING A TYPE "II" SLURRY.
64. ALL STENCILING (ARROWS INCLUDED) TO BE REMOVED BY GRINDING SHALL BE DONE IN A MANNER TO PROVIDE A RECTANGULAR SHAPE ENCOMPASSING THE AREA TO BE REMOVED. NO GRINDING SHALL "SHADOW" THE SHAPE OF THE STENCILING TO BE REMOVED.
65. CROSSWALKS SHALL BE INSTALLED USING CA SPEC. WATERBORNE PAINT, APPLIED AT A MINIMUM THICKNESS OF 15 MILS.
66. TYPE I OR II GLASS BEADS SHALL BE APPLIED IMMEDIATELY AFTER APPLICATION, MINIMUM RATE OF 5 LBS PER GALLON OF PAINT USED.
67. TYPE OF MARKERS SHALL BE AS STATED IN SECTION 85-1.02 "TYPE OF MARKERS" OF THE STATE STANDARD SPECIFICATIONS AND AS SHOWN ON THE STRIPING PLAN(S). ALL PAVEMENT MARKERS AND ROAD SIGNS INSTALLED SHALL CONFORM TO THE PROVISIONS IN THE LATEST EDITION OF THE CALIFORNIA SUPPLEMENT TO THE MANUAL OF UNIFORM TRAFFIC CONTROL DEVICES (MUTCD), SECTION 85 OF THE STATE STANDARD SPECIFICATIONS, STATE STANDARD PLANS, PAGES A20-A THROUGH D AND PAGES A73-A THROUGH C ALONG WITH THE CITY OF MADERA SPECIFICATIONS.
68. ALL CONCRETE MEDIAN NOSE FACES SHALL BE PAINTED FOR A DISTANCE OF THREE (3) FEET ALONG BOTH SIDES WITH REFLECTIVE YELLOW PAINT.
69. THE CONTRACTOR SHALL FURNISH AND INSTALL NEW OM2-2H MARKERS ON ALL MEDIAN ISLAND NOSES, UNLESS OTHERWISE NOTED ON THE PLANS.
70. SIGNS SHALL BE PLACED A MINIMUM OF FOUR (4) FEET FROM THE EDGE OF PAVEMENT WHEN INSTALLING ALONG STREETS WHERE CURB AND GUTTER ARE NOT PRESENT.
71. SIGN PLACEMENT SHALL ALLOW FOR 5 FEET CLEAR WALKING PATH BETWEEN POST AND BACK OF CURB OR ANY OTHER OBSTRUCTION.
72. WHERE SIGNS ARE TO BE INSTALLED, LIGHT POLES SHOULD BE USED, IN LIEU OF POSTS, WHENEVER POSSIBLE.
73. STREET SIGN INSTALLATION ON METAL STREELIGHT OR SIGNAL POLES SHALL REQUIRE THE USE OF STAINLESS STEEL BANDING MATERIAL. NO HOSE CLAMPS ARE ALLOWED.

TRAFFIC CONTROL

74. BEFORE ANY WORK IS STARTED IN THE RIGHT-OF-WAY, THE CONTRACTOR SHALL INSTALL ALL ADVANCE WARNING SIGNS FOR THE CONSTRUCTION ZONE. THE CONTRACTOR SHALL INSTALL TEMPORARY STOP SIGNS AT ALL NEW STREET ENCROACHMENTS INTO EXISTING PUBLIC STREETS IMMEDIATELY AFTER THE FIRST GRADING WORK IS ACCOMPLISHED AND SHALL MAINTAIN SAID SIGNS UNTIL PERMANENT SIGNS ARE INSTALLED. ALL CONSTRUCTION SIGNING, BARRICADING, AND TRAFFIC DELINEATION SHALL CONFORM TO THE CALIFORNIA SUPPLEMENT TO THE MANUAL OF UNIFORM TRAFFIC CONTROL DEVICES 2014 EDITION WITH REVISION 6, MARCH 2021, ISSUED BY THE STATE OF CALIFORNIA DEPARTMENT OF TRANSPORTATION AND BE APPROVED BY THE CITY OF MADERA BEFORE CONSTRUCTION BEGINS. COMPLIANCE WITH THE REQUIREMENTS OF SAID MANUAL SHALL BE CONSIDERED AS A MINIMUM REQUIREMENT AND IT SHALL BE THE RESPONSIBILITY OF THE CONTRACTOR TO PROVIDE ADDITIONAL SAFETY DEVICES WHEN NECESSARY TO MAINTAIN A SAFE CONDITION.
75. ONE 12 FOOT DRIVING LANE MUST BE MAINTAINED IN EACH DIRECTION OF TRAVEL AT ALL TIMES UNLESS OTHERWISE APPROVED BY THE CITY ENGINEER.
76. PRIOR TO COMPLETION OF WORK EACH DAY, THE CONTRACTOR SHALL BACKFILL AND PROVIDE TEMPORARY TRENCH RESURFACING BEFORE LEAVING THE SITE.
77. NO PUBLIC STREET SHALL BE CLOSED WITHOUT PRIOR APPROVAL FROM THE CITY ENGINEER.
78. IF THE PROJECT IMPROVEMENTS NECESSITATE, TEMPORARY REMOVAL AND OR RELOCATION OF TRAFFIC CONTROL SIGNS, MARKINGS OR ANY OTHER TRAFFIC CONTROL DEVICES, THEY SHALL BE MAINTAINED THROUGHOUT THE ENTIRE DURATION OF THE PROJECT AND SHALL BE RESTORED TO THE SATISFACTION OF THE CITY ENGINEER.
79. ENCROACHMENT PERMITS ISSUED TO ALLOW WORK IN THE PUBLIC RIGHT-OF-WAY SHALL BE REVOKED IF THE ABOVE REQUIREMENTS ARE NOT STRINGENTLY COMPLIED WITH BY THE DEVELOPER'S FORCES DURING OFF-SITE STREET IMPROVEMENT OPERATIONS. REVOKED PERMITS SHALL NOT BE RE-ISSUED UNTIL SUCH TIME AS THE CITY ENGINEER IS SATISFIED THAT THE DEVELOPER'S CONTRACTORS WILL PERFORM THEIR OPERATION IN COMPLIANCE WITH THE ABOVE REQUIREMENTS INCLUDING THE CONDITIONS OF THE STREET WORK PERMIT.

GENERAL FIRE DEPARTMENT NOTES

80. WATER TRUCK MUST BE EQUIPPED WITH AN APPROVED AIR GAP SEPARATION WHICH SHALL BE A MINIMUM OF TWICE THE DIAMETER OF THE SUPPLY LINE ABOVE THE OVERFLOW OF THE WATER TANK. A PLUMBING FOR AIR GAP SHALL BE ATTACHED TO OUTSIDE OF TANK.
81. IF DURING CONSTRUCTION IT BECOMES NECESSARY TO CLOSE ANY CONTROL VALVE OR PLACE A HYDRANT OUT OF SERVICE, THE CITY PUBLIC WORKS DEPARTMENT SHALL BE NOTIFIED.
82. AT ALL TIMES DURING CONSTRUCTION, SUITABLE EMERGENCY VEHICLE ACCESS ROADS MUST BE MAINTAINED. ROADWAYS MUST BE SMOOTH, COMPACTED AND CAPABLE OF SUPPORTING THE IMPOSED LOADS OF ALL EMERGENCY VEHICLES.
83. ALL FIRE HYDRANTS ARE TO BE IN PLACE AND WORKING BEFORE BUILDING CONSTRUCTION BEINGS.
84. CONTRACTOR MUST APPLY FOR TEMPORARY CONSTRUCTION SITE METER THOUGH PUBLIC WORKS DEPARTMENT. CONSTRUCTION SITE WATER METERS WILL BE SET AND RELOCATED ONLY BY PUBLIC WORKS DEPARTMENT. ALL WATER TRUCKS BEING FILLED FROM FIRE HYDRANTS OR FROM ANY OTHER CONNECTION THE CITY WATER SYSTEM MUST HAVE AN AIR GAP BETWEEN THE RECEIVING VESSEL AND DELIVERY PIPE. AIR GAP MUST BE AT LEAST TWO TIMES THE DIAMETER OF THE DELIVERY PIPE. ALL DELIVERY PIPES MUST BE EXTERNALLY MOUNTED ON THE TRUCK TO FACILITATE VISUAL INSPECTION. PRESENCE OF A R.P. ON THE HYDRANT WILL NOT EXEMPT TRUCKS FROM THE AIR GAP REQUIREMENT. NO CONSTRUCTION WATER MAY BE TAKEN FROM THE WATER SYSTEM THROUGH A HOSE UNLESS IT IS DOWNSTREAM OF THE R.P. AND METER.

MADERA CIVIL IMPROVEMENTS NOTES:

PROJECT REVIEW BY REPRESENTATIVES OF THE CITY OF MADERA IS INTENDED TO COMPLEMENT AND ASSIST THE PROFESSIONAL(S) IN ADVANCING A PROJECT THAT IS IN COMPLIANCE WITH CITY OF MADERA REQUIREMENTS, AND IS CONSISTENT WITH PUBLIC BENEFIT, HEALTH, SAFETY, AND WELFARE. REVIEW IS NOT AN ASSURANCE OF PROJECT FEASIBILITY, PROFESSIONAL AND TECHNICAL ACCURACY, OR CONFORMANCE WITH SPECIAL CONDITIONS IMPOSED BY PUBLIC AGENCIES, INCLUDING THE CITY OF MADERA PLANNING COMMISSION.

APPROVAL OF THESE IMPROVEMENT PLANS AND SPECIFICATIONS IS MADE BASED ON THE REPRESENTATIONS MADE BY THE PROFESSIONAL(S) IN RESPONSIBLE CHARGE PURSUANT TO SECTION 6703 AND 8703 OF THE BUSINESS AND PROFESSIONS CODE THAT THEY HAVE DISCHARGED THEIR RESPONSIBILITIES AND PREPARED COMPLETE DOCUMENTS WHICH COMPLY WITH CITY OF MADERA REQUIREMENTS FOR CONSTRUCTION OF THE IMPROVEMENTS DEPICTED HEREIN.

THE ENGINEER SHOULD CONTACT THE CALIFORNIA REGIONAL WATER QUALITY CONTROL BOARD REGARDING THE REQUIREMENT TO FILE A NOTICE OF INTENT (NOI) WITH THE STATE WATER RESOURCES CONTROL BOARD IN COMPLIANCE WITH THE NATIONAL POLLUTANT DISCHARGE ELIMINATION SYSTEM (NPDES) PERMIT PRIOR TO CONSTRUCTION. ALL CONSTRUCTION PROJECTS ONE ACRE OR LARGER TYPICALLY MUST APPLY FOR THE PERMIT.

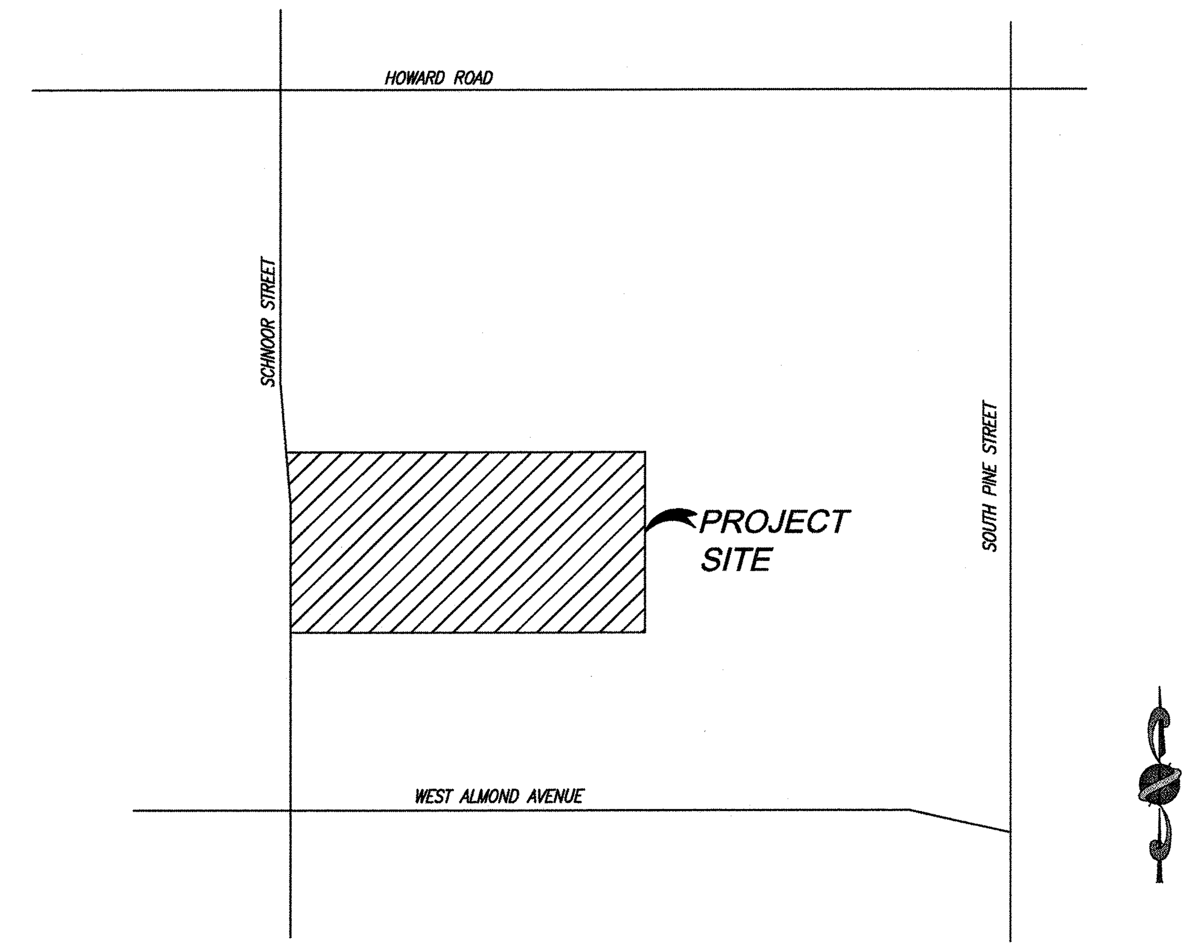

VICINITY MAP:

NOT TO SCALE

FEMA NOTE:

THIS SITE IS LOCATED IN FEMA FLOOD ZONE 'X' PER COMMUNITY MAP 06039C1155E, EFFECTIVE 9/26/2008

BENCHMARK:

NATIONAL GEODETIC SURVEY MON
PID: GU0713

STAMPED: L 549 1957

MARKER/SETTING: BENCH MARK DISK SET IN TOP OF CONCRETE MONUMENT

DESCRIPTION:
3 MI W. FROM MADERA
1.0 MIL SOUTHWEST ALONG WEST YOSEMITE AVENUE FROM THE SOUTHERN PACIFIC COMPANY RAILROAD STATION AT MADERA, THENCE 2.0 MILES WEST ALONG AVENUE 14, IN R17E T11S, IN THE SOUTHEAST CORNER OF SECTION 21, AT THE INTERSECTION OF ROAD 24, 104 FEET NORTH OF THE CENTER LINE OF THE AVENUE, 25 FEET WEST OF THE CENTER LINE OF ROAD, 1 1/2 FEET NORTH OF A TELEPHONE POLE WITH TWO GUY WIRES, 1.4 FEET SOUTH OF A WITNESS POST, ABOUT LEVEL WITH THE ROAD, AND SET IN THE TOP OF A CONCRETE POST PROJECTING 0.4 FOOT ABOVE THE GROUND.

ELEVATION: 248.8 (NAVD 88 DATUM)

BASIS OF BEARINGS:

THE EAST LINE OF THE NORTHEAST QUARTER OF SECTION 26, T. 11 S., R. 17 E., M.D.B.&M. IS TAKEN TO BE SOUTH 00°04'28" EAST AS SHOWN ON DOCUMENT NO. 14123, RECORDED IN BOOK 20, AT PAGE 56 OF MAPS, MADERA COUNTY RECORDS.

SPECIAL NOTE

WHERE UNDERGROUND AND SURFACE STRUCTURES ARE SHOWN ON THE PLANS, THE LOCATIONS, DEPTH AND DIMENSIONS OF STRUCTURES ARE BELIEVED TO BE REASONABLY CORRECT, BUT ARE NOT GUARANTEED. SUCH STRUCTURES ARE SHOWN FOR THE INFORMATION OF THE CONTRACTOR, BUT INFORMATION SO GIVEN IS NOT TO BE CONSTRUED AS A REPRESENTATION THAT SUCH STRUCTURES WILL, IN ALL CASES, BE FOUND WHERE SHOWN, OR THAT THEY REPRESENT ALL OF THE STRUCTURES WHICH MAY BE ENCOUNTERED.

CONTRACTOR SHALL NOTIFY "USA" (UNDERGROUND SERVICE ALERT) AT 811, 48 HOURS BEFORE COMMENCING EXCAVATION AND ALL UTILITY AUTHORITIES OR UTILITY COMPANIES HAVING POSSIBLE INTEREST IN THE WORK, OF CONTRACTOR'S INTENTION TO EXCAVATE PROXIMATE TO EXISTING FACILITIES, AND CONTRACTOR SHALL VERIFY THE LOCATION OF ANY UTILITIES WITHIN THE WORK AREA.

SITE INFORMATION:

CROSS STREETS: SOUTH SCHNOOR AVENUE AND WEST ALMOND AVENUE

APN: 009-330-011

SITE AREA: 16.57 ACRES

CIVIL SHEET INDEX	
SHEET DESCRIPTION	SHEET NUMBER
COVER SHEET	C-1
GRADING PLAN	C-2
GRADING PLAN DETAILS	C-3
UTILITY PLAN	C-4
EROSION CONTROL PLAN	C-5

OFF-SITE QUANTITIES	
ITEM	QUANTITY
CONCRETE SIDEWALK	1,602 S.F.
DRIVE APPROACH	1 EA
ADA RAMPS	2 EA
VALLEY GUTTER	1 EA

2019CBC
City of Madera
Building Department
The approval of these plans does not prevent the City of Madera from requiring correction of errors or omissions in the plans, specifications of construction. Subject to field inspections and approvals. Laws, Codes and Ordinances
2019CBC 2019CBC
APPROVED
By:
Date: MAR 0 3 2022

PRECISION CIVIL ENGINEERING, INC

REGISTERED PROFESSIONAL ENGINEER
NATHAN M. GLEAVES
NO. 67552
CIVIL
STATE OF CALIFORNIA

WDID# 5F20C395690

CONSTRUCTION PLANS FOR

SOUTH SCHNOOR AVENUE AND WEST ALMOND AVENUE

COVER SHEET

CITY OF MADERA
ENGINEERING DEPARTMENT
428 W. YOSEMITE AVENUE
MADERA, CALIFORNIA 93638

SHEET C-1 OF C-5 SHEETS

PLAN REVISION		
INITIAL ISSUE DATE		
CHANGE	DATE	APPROVAL

WORK ORDER No.

APPROVAL		DATE	
CITY ENGINEER			
REVIEWED BY			
PUBLIC WORKS:			
FIRE DEPARTMENT:			
PARK DEPARTMENT:			
DESIGNED BY:	NMG	CHECKED BY:	
DRAWN BY:	CPG	INSPECTED BY:	
CONSTRUCTION DATES	DATE STARTED	DATE COMPLETED	
CONTRACTOR:			
PROJECT No.	SPR 2021-24		

P:\CIVIL 3D PROJECTS\2021\21-033\PRODUCTION DRAWINGS\CIVIL\21-033 COVER SHEET.DWG 11/17/2021 3:16:17 PM

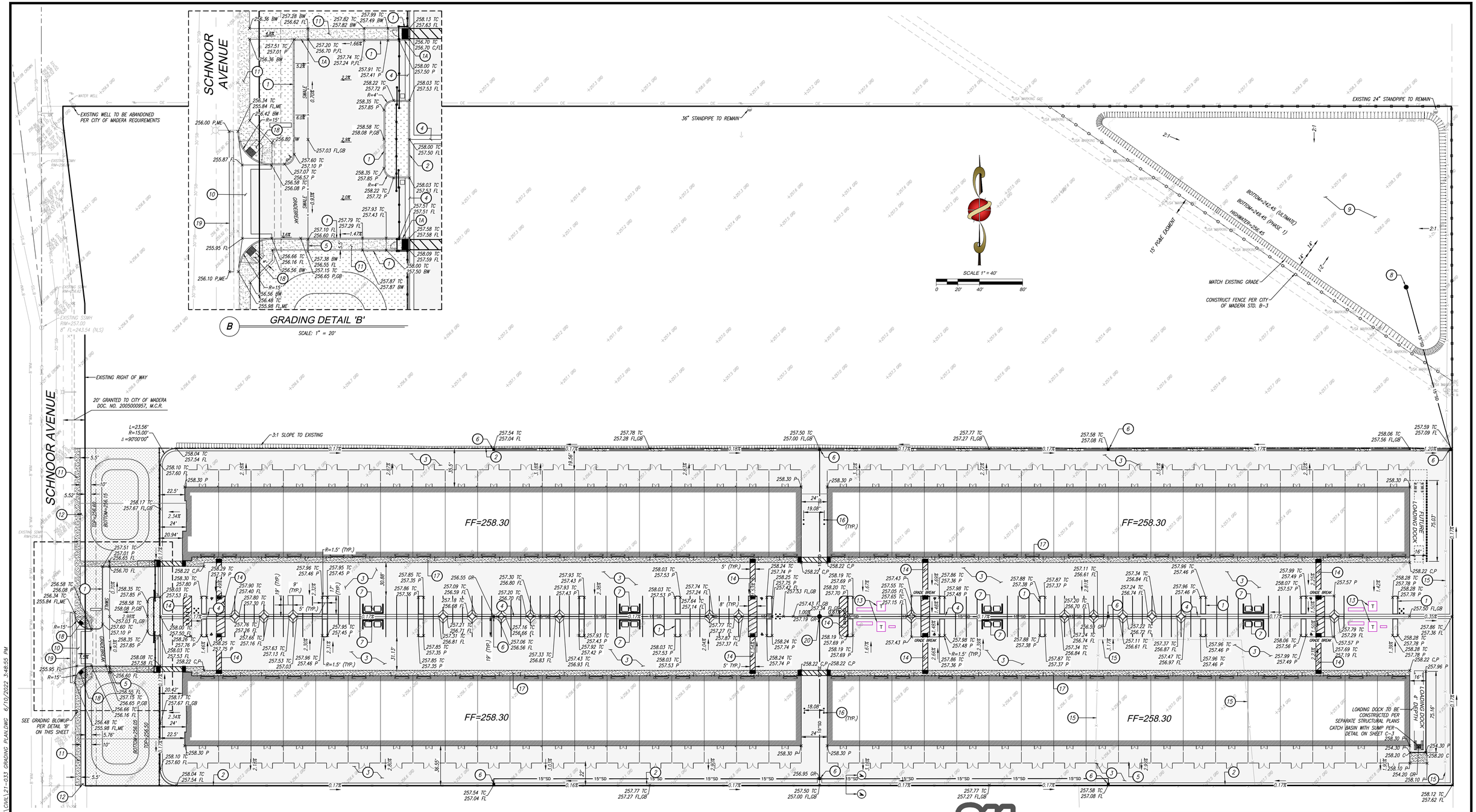

CONSTRUCTION KEYNOTES:

1. CONSTRUCT 6" CONCRETE CURB PER DETAIL 'D' SHEET C-3
1A. CONSTRUCT 6" CONCRETE CURB TAPER PER DETAIL 'F' SHEET C-3
2. CONSTRUCT 6" CONCRETE CURB AND GUTTER PER DETAIL 'G' SHEET C-3
3. CONSTRUCT PAVEMENT PER DETAIL "A" SHEET C-3
4. CONSTRUCT 4' CONCRETE VALLEY GUTTER PER DETAIL 'B' SHEET C-3
5. INSTALL SIDEWALK DRAIN (1) 3"X6" RECTANGULAR TUBE PER DETAIL 'C', SHEET C-3
6. INSTALL CHRISTY U-23 CATCH BASIN WITH H-20 TRAFFIC RATED LID PER DETAIL ON SHEET C-3
7. CONSTRUCT TRASH ENCLOSURE PER CITY OF MADERA STD. E-7 WITH SCUPPERS FOR DRAINAGE. SEE DETAIL 'H' PER SHEET C-3
8. INSTALL OUTFALL STRUCTURE PER UTILITY PLAN
9. CONSTRUCT STORM DRAIN BASIN PER CITY OF MADERA STD. SD-1
10. CONSTRUCT MODIFIED CONCRETE VALLEY GUTTER PER CITY OF MADERA MODIFIED STD. ST-1, SHEET C-3
11. CONSTRUCT CONCRETE SIDEWALK PER CITY OF MADERA STD. ST-13A
12. INSTALL "NO PARKING" R26 (CA) SIGN AND "BIKE LANE" R81 (CA) SIGN
13. PROPOSED ELECTRICAL CABINET AND TRANSFORMER PER ELECTRICAL PLANS
14. PROPOSED STRIPING
15. EXISTING FENCE TO BE REMOVED
16. INSTALL BOLLARD
17. CONSTRUCT 5' CONCRETE WALK PER DETAIL 'E' SHEET C-3
18. CONSTRUCT CURB ACCESS RAMP PER CITY OF MADERA STD. ST-16
19. SAWCUT TO A CLEAN, SMOOTH EDGE AND INSTALL 1' WIDE, 7" DEEP AC PLUG
20. INSTALL ADS N1LOPLAST MANHOLE WITH SLOTTED TRAFFIC RATED LID

EARTHWORK QUANTITIES (PHASE 1):

DISTURBED AREA (ACRES)	CUT VOLUME (CUBIC YARDS)	FILL VOLUME (CUBIC YARDS)	NET VOLUME (CUBIC YARDS) CUT/FILL
9	7,279	7,088	191 (CUT)

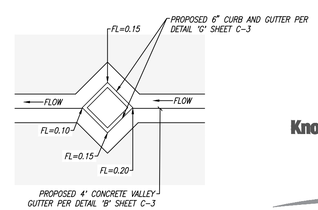

A LANDSCAPE PLANTER DETAIL

NO SCALE

811 Know what's below. Call before you dig.

PRECISION CIVIL ENGINEERING, INC

REGISTERED PROFESSIONAL ENGINEER NATHAN M. GLEAVES NO. 67552 CIVIL STATE OF CALIFORNIA

CONSTRUCTION PLANS FOR

SOUTH SCHNOOR AVENUE AND WEST ALMOND AVENUE

GRADING PLAN

CITY OF MADERA
ENGINEERING DEPARTMENT
428 W. YOSEMITE AVENUE
MADERA, CALIFORNIA 93638

PLAN REVISION

INITIAL ISSUE DATE

CHANGE	DATE	APPROVAL

WORK ORDER No.

SHEET C-2 OF C-5 SHEETS

APPROVAL DATE

CITY ENGINEER

REVIEWED BY:

PUBLIC WORKS:

FIRE DEPARTMENT:

PARK DEPARTMENT:

DESIGNED BY: NMG CHECKED BY:

DRAWN BY: CPG INSPECTED BY:

CONSTRUCTION DATES DATE STARTED DATE COMPLETED

CONTRACTOR:

PROJECT No. SPR 2021-24

P:\CIVIL 3D PROJECTS\2021\21-033\PRODUCTION DRAWINGS\CIVIL\21-033 GRADING PLAN.DWG 6/10/2022 3:48:55 PM

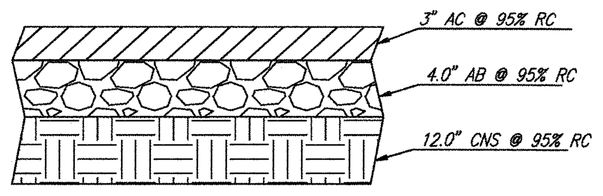

(A) TYPICAL PAVEMENT SECTION

NO SCALE

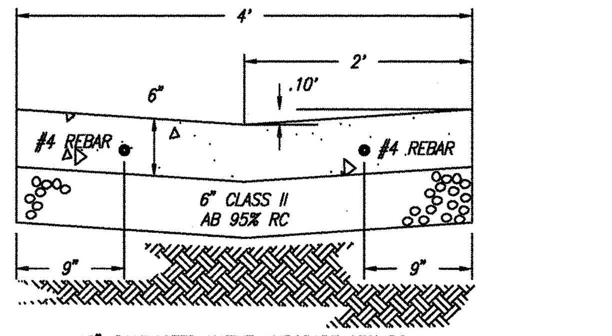

(B) VALLEY GUTTER

NOT TO SCALE

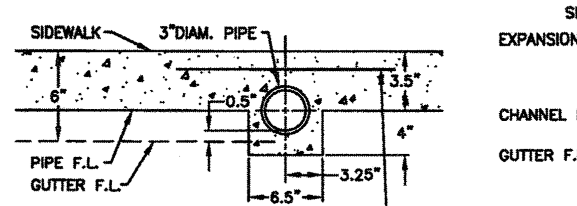

3" DIAMETER PIPE UNDER WALK

PROVIDE TWO LAYERS OF 6" X 6" WELDED WIRE MESH GAGE NO. 10, EXTEND 12" (MIN.) ON EACH SIDE OF TUBE.
3"X5" OR 3"X6" RECT. TUBING WITH 3/16" (MIN.) WALL THICKNESS.

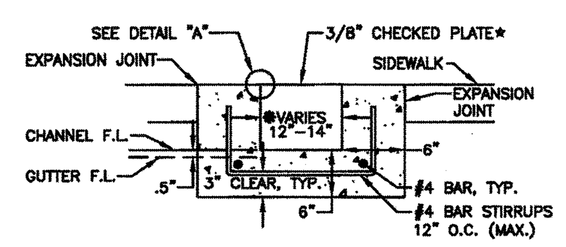

CHANNEL THROUGH WALK

✱CHANNELS CAN BE WIDER UPON APPROVAL
★ONE SECTION OF 3/8" CHECKED PLATE SHALL NOT EXCEED 5 FEET IN LENGTH. FOR CHANNELS WIDER THAN 14" AND UP TO 24", PROVIDE 1"X 1"X 3/16" ANGLE IRON AT 12" O.C. WELDED ON THE UNDERSIDE OF THE CHECKED PLATE.

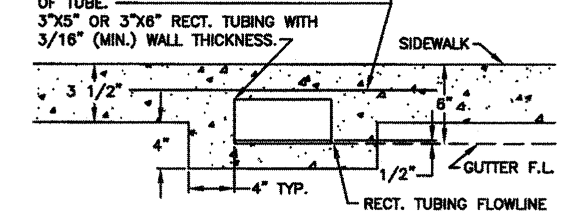

RECTANGULAR STEEL TUBING UNDER WALK

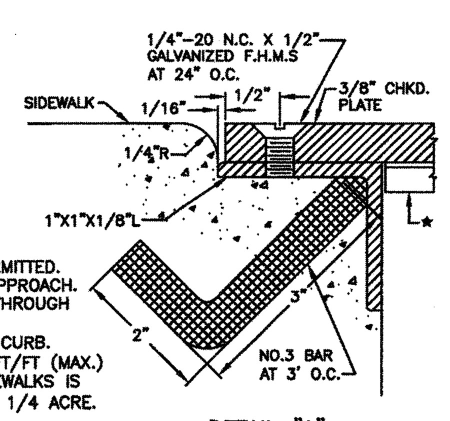

DETAIL "A"

NOTES:
1. FOR 3" OR SMALLER DIAMETER PIPE, SCH. 40 PVC IS PERMITTED.
2. DRAIN SHALL NOT BE CONSTRUCTED UNDER A DRIVEWAY APPROACH.
3. SIDEWALK DRAINS, EXCEPT CHANNELS, SHALL BE ANGLED THROUGH SIDEWALK IN DIRECTION OF GUTTER FLOW.
4. ALL DRAINS AND CHANNELS SHALL BE FLUSH W/FACE OF CURB.
5. DRAIN SLOPES SHALL BE 0.010 FT/FT (MIN.) AND 0.042 FT/FT (MAX.)
6. SURFACE DRAINAGE OVER DRIVEWAY APPROACHES AND SIDEWALKS IS NOT PERMITTED WHEN THE AREA TO BE DRAINED EXCEEDS 1/4 ACRE.

(C) UNDERWALK DRAIN DETAIL

NO SCALE

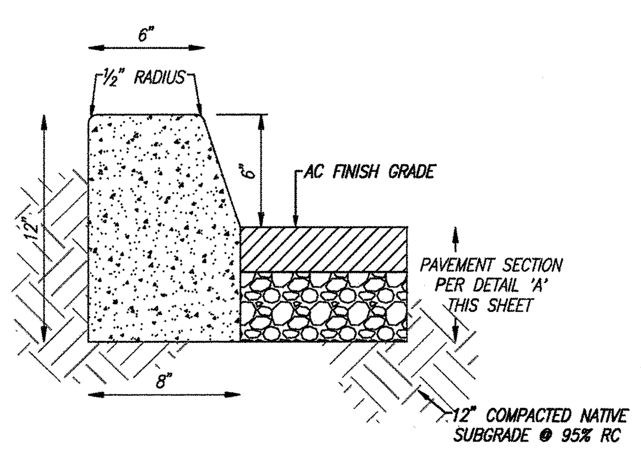

(D) 6" CONCRETE CURB

NO SCALE

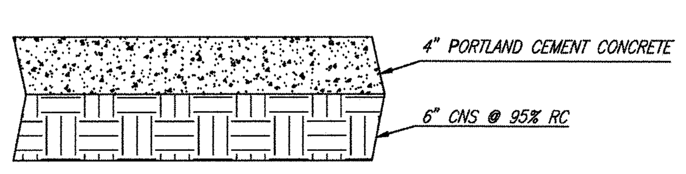

(E) TYPICAL CONCRETE SECTION

NO SCALE

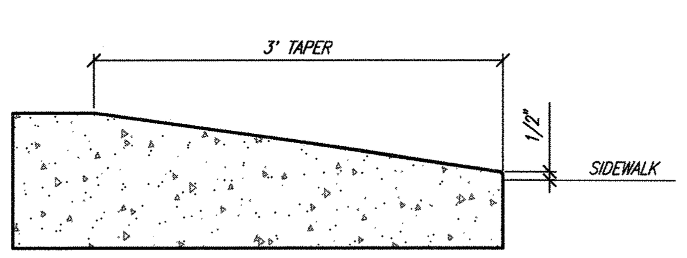

(F) CURB TAPER DETAIL

NO SCALE

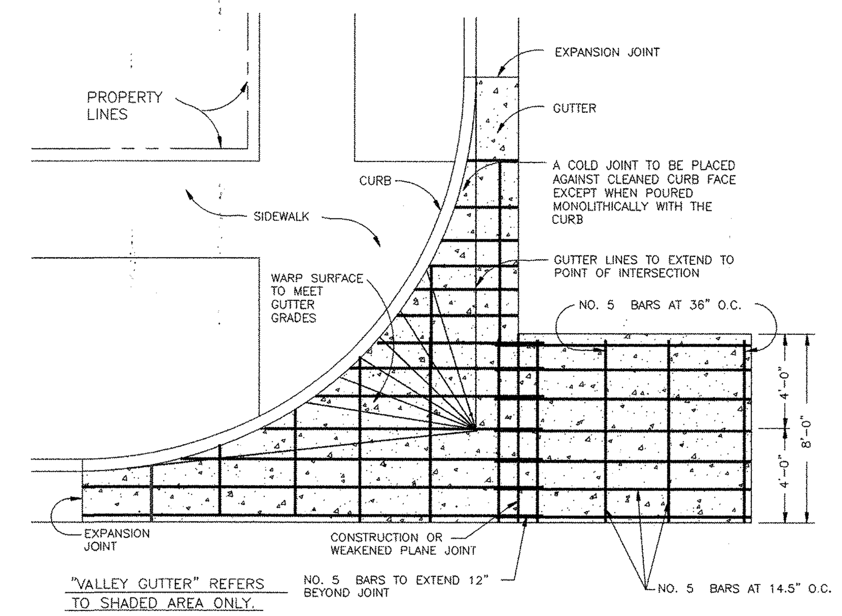

PLAN

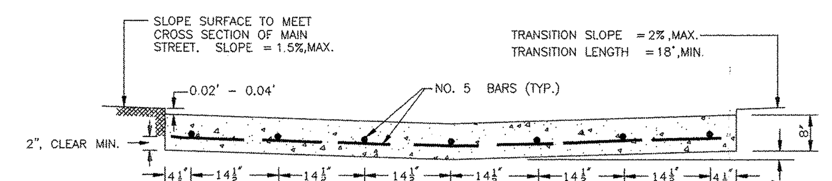

NOTE: 1) IN NEW CONSTRUCTION AREAS, VALLEY GUTTERS SHALL BE DESIGNED TO PROVIDE A MINIMUM DIFFERENCE OF THIRTY-FIVE HUNDREDTHS OF A FOOT (.35') FROM END OF RETURN TO END OF RETURN.
2) ALL VALLEY GUTTERS SHALL BE CONSTRUCTED USING 6 SACK CLASS A CONCRETE PER STD. SPECIFICATIONS 14-2

SECTION OF GUTTER

CONCRETE VALLEY GUTTER	REF. & REV. MARCH 2005 MAY 2007	CITY OF MADERA ST-1

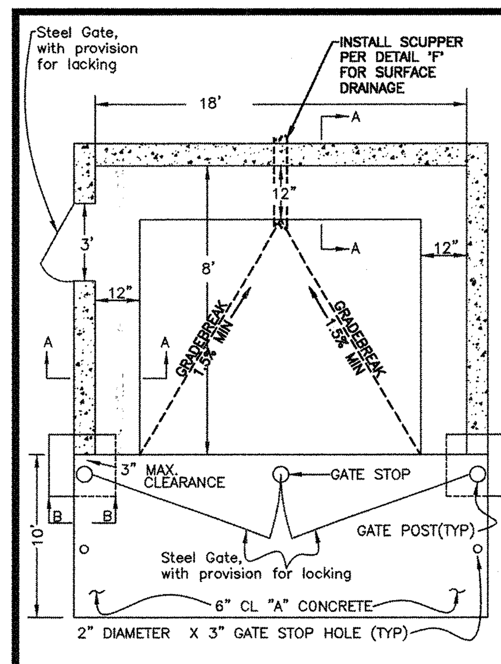

Plan View

General Notes:
1. The enclosure wall shall be six (6) feet high.
2. Enclosure require at least 50% of space designated for recycling. Allow a minimum of 18" between containers.
3. 3 or more units on residential require man door.
4. Grout all cells.
5. All masonry units shall comply with the latest adopted California Building Code and U.B.C. standard 24-4 Grade N.
6. All masonry walls shall be inspected by the City.
7. All masonry units shall be a minimum f'm=1500 psi.
8. Reinforcing steel shall be deformed bar, minimum Grade 40.
9. Footing concrete shall be a minimum 2500 psi at 28 days.
10. Mortar shall be type-S (minimum 1800 psi at 28 days.)
One (1) part cement, Type-1.
One-half (½) part lime putty or hydrated lime.
Four and one-half (4½) parts sand (maximum).
11. Grout shall be a minimum 2000 psi at 28 days.
One (1) part cement.
Three (3) parts sand.
Two (2) parts pea gravel.
12. Finish pad elevation to be flush with grade of access pavement.
13. Gate hinges shall be attached to the steel posts.
14. Solid gates are required on all enclosures.
15. 18' for two (2) bins.
16. Minimum specification for enclosure openings will be 7', not to be encumbered by gates or hinges.
17. All rebar must be tied at vertical and horizontal intersections.
18. Maintain minimum 3" clearance from steel to earth for cast-in-place footings.
19. Drawings not drawn to scale.
20. A pedestrian access, separate from primary service access is recommended.
21. Min 20" overlap for rebar. All splices joined with tie wire

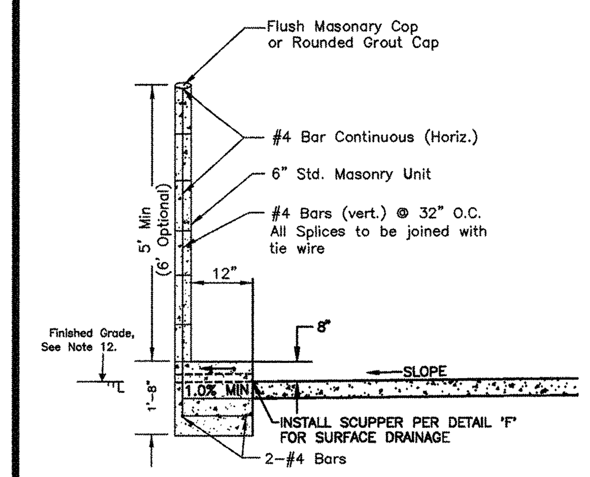

View "A-A"

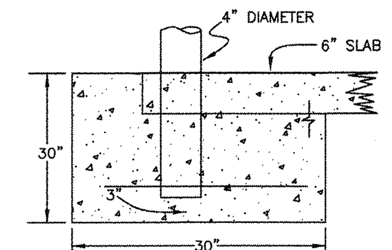

View "B-B"

Typical Section w/ Concrete Block Wall

TYPICAL REFUSE CONTAINER ENCLOSURE DETAILS	REF. & REV. MARCH 2005 AUG. 2008 APRIL 2010	CITY OF MADERA E-7

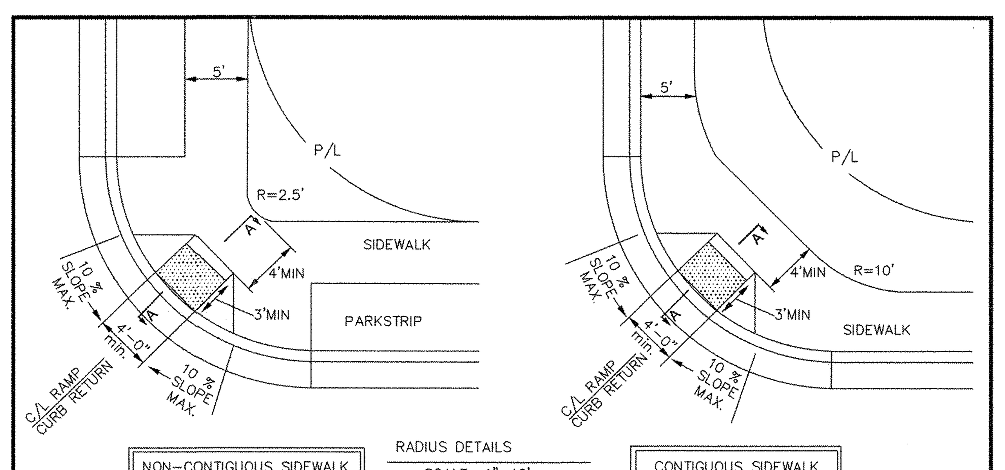

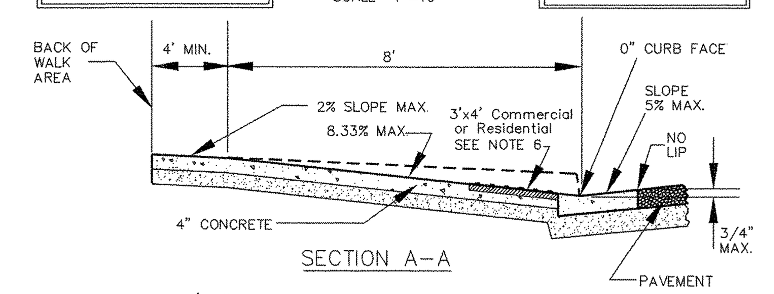

SECTION A-A

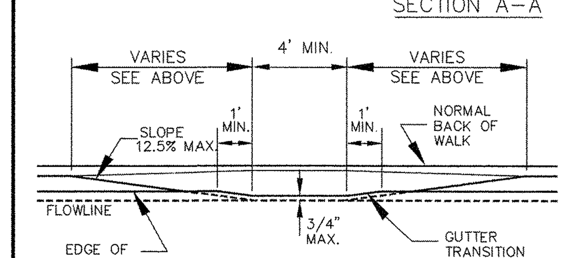

PROFILE

NOTE:
1. RAMPS NEED NOT TO BE CONSTRUCTED WHERE THERE ARE NO PEDESTRIAN FACILITIES. IF SUCH FACILITIES ARE ADDED LATER, THEN RAMP MUST BE INSTALLED AT THAT TIME.
2. RAMPS TO BE LOCATED BY THE CITY ENGINEER WHEN IMPRACTICAL TO BE AT CENTERLINE RADIUS.
3. LOWER END OF RAMP SHALL BE FLUSH WITH ADJACENT GUTTER SURFACE.
4. ALL RAMP SURFACES SHALL HAVE A ROUGH BROOM FINISH FOR MARKED CONTRAST FROM SIDEWALK FINISH.
5. DETECTABLE WARNING PANELS SHALL BE YELLOW AS MANUFACTURED BY ADA SOLUTIONS, INC., OR ARMORCAST OR EQUAL.
6. REFER TO CALTRANS REVISED STANDARD PLAN "RSP A88A", REVISED JULY 3, 2015, FOR ADDITIONAL REQUIREMENTS.

CURB ACCESS RAMP	REF. & REV. MARCH 2005 AUG. 2008 JUNE 2009 MARCH 2015 APRIL 2016	CITY OF MADERA ST-16

U23 CATCH BASIN

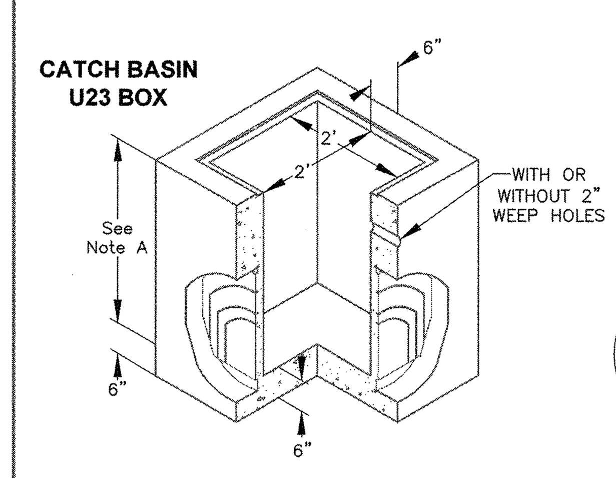

Note A: height is per job specification.

- Knock-Outs available in grade rings and catch basins.
- Opening, locations, and sizes to job specifications.
- With or without bottom.
- Progressive webbed knock-outs provide maximum flexibility, permitting pipe of any size to be neatly and quickly grouted in at jobsite.
- Standard grade rings available in 6" increments up to 4' high.
- All reinforcing steel meets ASTM specifications as required

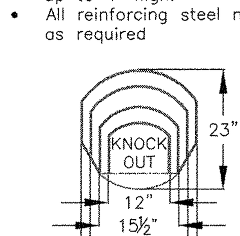

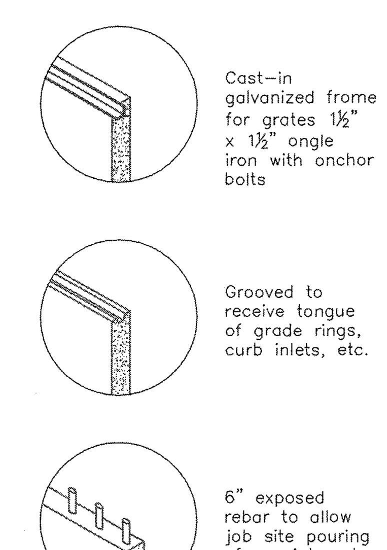

Oldcastle Precast® Enclosure Solutions MADERA/TRACY/ROSEVILLE/PHOENIX Phone: (800) 486-7070 Fax: (800) 486-6804 Copyright © 2008 Oldcastle Precast Inc.	U23 CATCH BASIN FILE NAME: 036CBU23_ISO ISSUE DATE: January, 2008 www.oldcastleprecast.com	U23 CATCH BASIN 2' x 2' W/ 6" WALLS Christy

Copyright © 2008 by Oldcastle Precast Inc. 67

PITS, Vaults, & Catch Basins

(G) 6" CONCRETE CURB AND GUTTER

NO SCALE

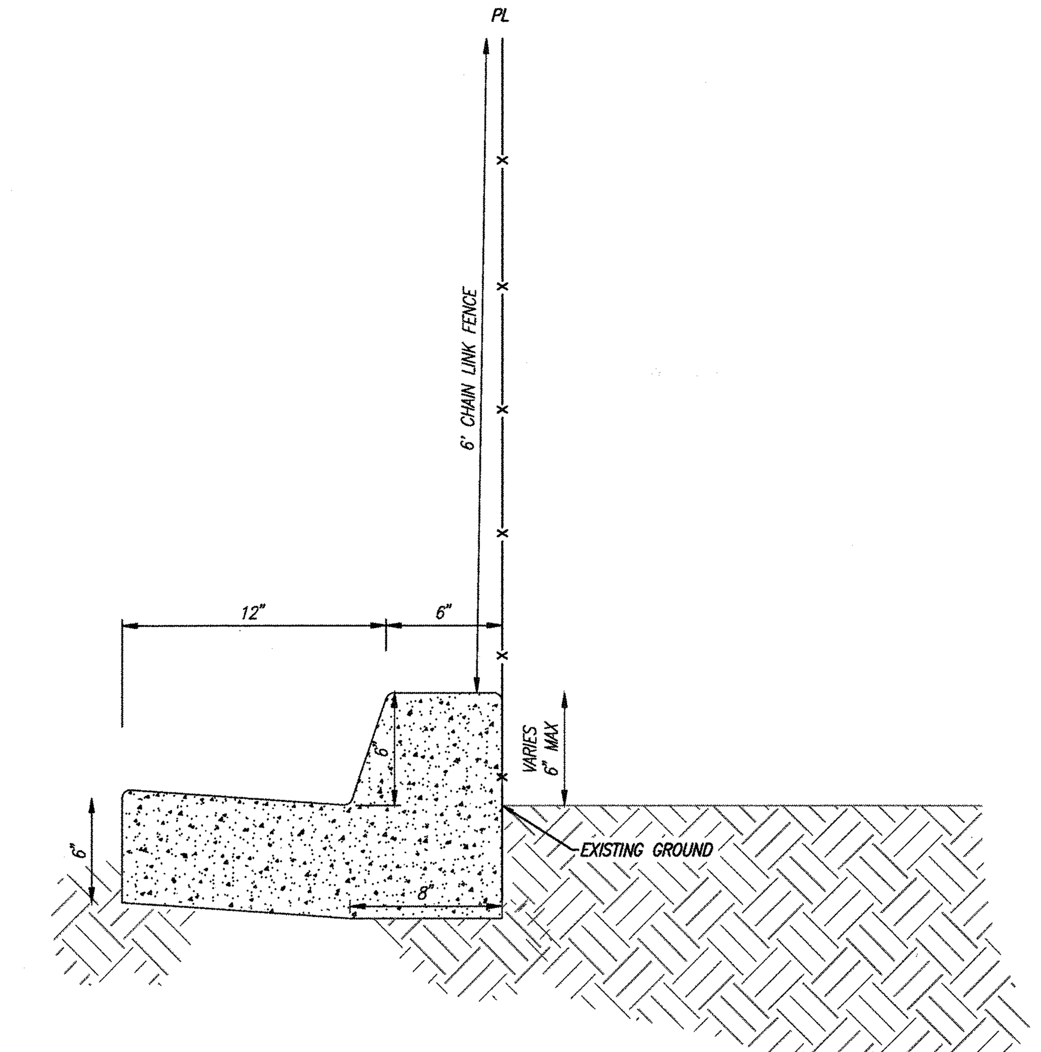

(A-A) SECTION A-A

NO SCALE

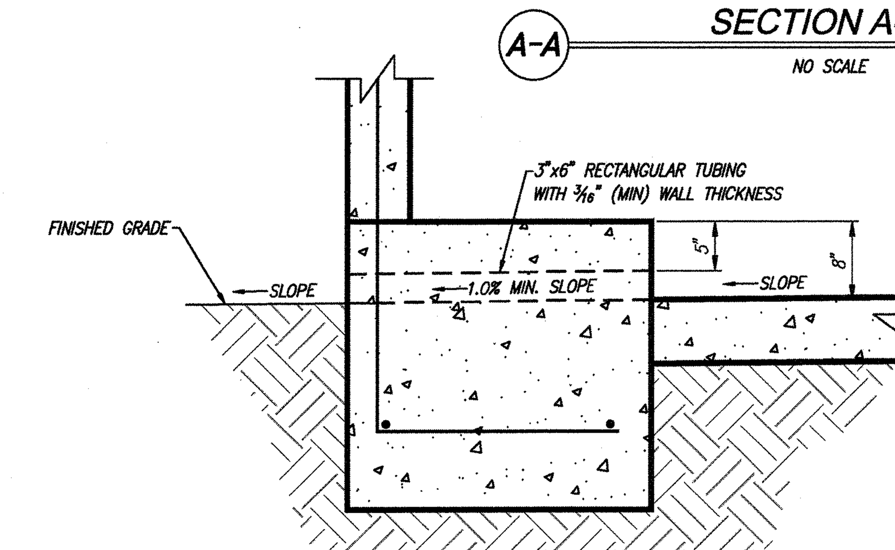

(H) TRASH ENCLOSURE SCUPPER DETAIL

NO SCALE

REGISTERED PROFESSIONAL ENGINEER NATHAN M. GLEAVES NO. 67552 CIVIL STATE OF CALIFORNIA

PRECISION CIVIL ENGINEERING, INC.
1234 O. STREET, FRESNO, CA 93721 PH(559)449-4500 FAX(559)449-4515

2019CBC City of Madera Building Department
The approval of these plans does not prevent the City of Madera from requiring correction of errors or omissions in the plans, specifications of construction. Subject to field inspections and approvals. Laws, Codes and Ordinances
APPROVED
By:
Date: MAR 0 3 2022

CONSTRUCTION PLANS FOR
WHOLESALE PARTNERS
GRADING PLAN DETAILS

CITY OF MADERA
ENGINEERING DEPARTMENT
428 W. YOSEMITE AVENUE
MADERA, CALIFORNIA 93638

SHEET C-3 OF C-5 SHEETS

APPROVAL		DATE
CITY ENGINEER		
REVIEWED BY PUBLIC WORKS:		
FIRE DEPARTMENT:		
PARK DEPARTMENT:		
DESIGNED BY: NMG	CHECKED BY:	
DRAWN BY: CPG	INSPECTED BY:	
CONSTRUCTION DATES	DATE STARTED	DATE COMPLETED
CONTRACTOR:		
PROJECT No. SPR 2021-08		

PLAN REVISION

INITIAL ISSUE DATE

CHANGE	DATE	APPROVAL

WORK ORDER No.

P:\CIVIL 3D PROJECTS\2021\21-033\PRODUCTION DRAWINGS\CIVIL\21-033 GRADING DETAILS.DWG 11/17/2021 3:52:15 PM

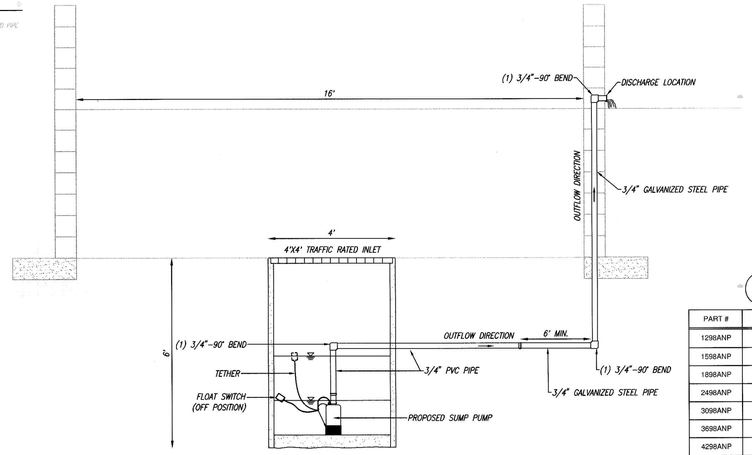

A CATCH BASIN WITH SUMP PUMP

NO SCALE

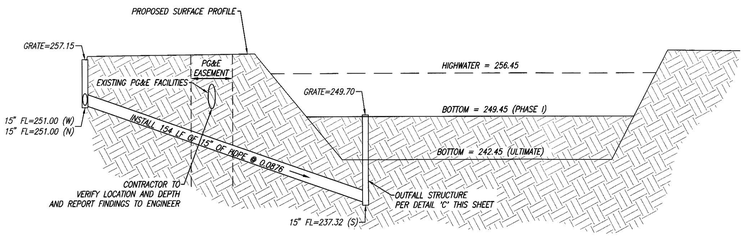

B BASIN SECTION

NO SCALE

PART #	PIPE SIZE	A	JOINT
1298ANP	12 in (300 mm)	14.7 in (372 mm)	ST
1598ANP	15 in (375 mm)	19.5 in (495 mm)	ST
1898ANP	18 in (450 mm)	22.6 in (573 mm)	ST
2498ANP	24 in (600 mm)	24.1 in (611 mm)	ST
3098ANP	30 in (750 mm)	34.3 in (872 mm)	ST
3698ANP	36 in (900 mm)	36.8 in (933 mm)	ST
4298ANP	42 in (1050 mm)	41.9 in (1064 mm)	ST
4898ANP	48 in (1200 mm)	45.1 in (1146 mm)	ST
6098ANP	60 in (1500 mm)	52.6 in (1335 mm)	ST

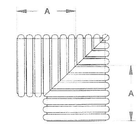

D ADS HP STORM 90° BEND

NO SCALE

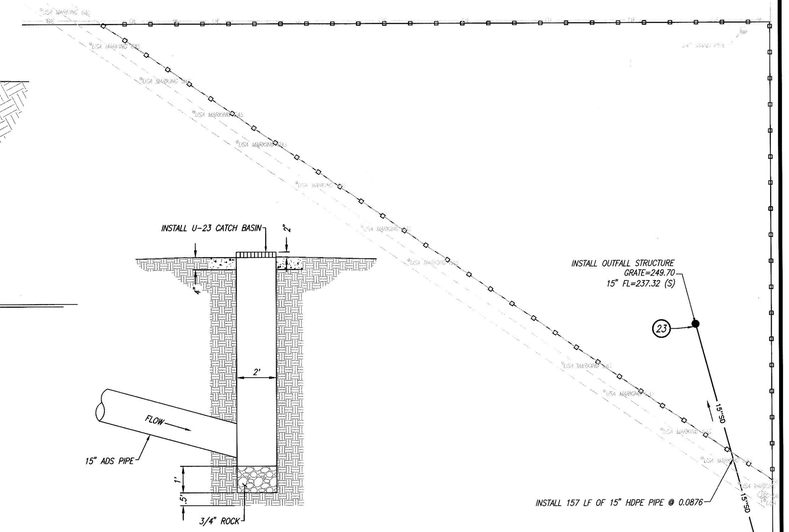

C OUTFALL STRUCTURE

NO SCALE

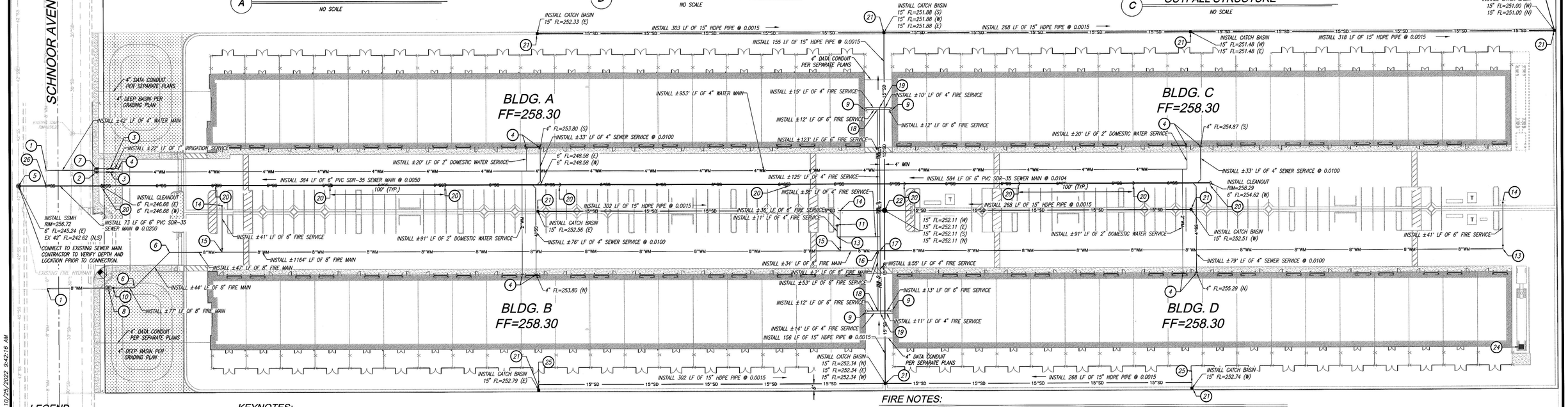

LEGEND

SSMH	SANITARY SEWER MANHOLE
	EXISTING BACKFLOW PREVENTOR
	EXISTING SEWER MANHOLE
	EXISTING WATER METER
8"SS	EXISTING SEWER MAIN
WTR	EXISTING WATER MAIN
	PROPOSED REDUCED BACKFLOW ASSEMBLY
WM	PROPOSED WATER METER
4"SS	PROPOSED SEWER MAIN (SIZE AS NOTED)
2"WM	PROPOSED WATER MAIN (SIZE AS NOTED)
DC	PROPOSED DETECTOR CHECK

KEYNOTES:

1. CONNECT TO EXISTING WATER MAIN PER METHOD OF HOT TAP. CONTRACTOR TO VERIFY SIZE AND DEPTH AND LOCATION OF EXISTING SERVICE MAIN PRIOR TO INSTALLATION.
2. INSTALL 4" WATER METER PER CITY OF MADERA STD. W-10 AND W-9B
3. INSTALL REDUCED PRESSURE PRINCIPLE BACKFLOW PREVENTION ASSEMBLY PER CITY OF MADERA STD. W-14
4. CAP AND STUB SERVICE
5. INSTALL 60" SEWER MANHOLE PER CITY OF MADERA STD. S-2
6. INSTALL 45° BEND
7. INSTALL 1" WATER METER PER CITY OF MADERA STD. W-9A AND W-9B
8. INSTALL 8" DETECTOR CHECK PER CITY OF MADERA STD. W-16
9. INSTALL FIRE RISER PER APPROVED FIRE PROTECTION PLANS. (SEPARATE SUBMITTAL)
10. INSTALL POST INDICATOR VALVE PER DETAIL BELOW AND CITY OF MADERA FIRE DEPARTMENT STANDARDS
11. INSTALL FIRE DEPARTMENT CONNECTION PER FDC/PIV DETAIL ON THIS SHEET AND CITY OF MADERA FIRE DEPARTMENT STANDARDS
13. INSTALL 90° BEND
14. INSTALL FIRE HYDRANT PER CITY OF MADERA STD. W-26 AND BOLLARDS PER W-27
15. INSTALL 8"X6"X8" TEE
16. INSTALL 8"X6"X"8"X6" CROSS
17. INSTALL 8"X4"X8"X4" CROSS
18. INSTALL 6" TEE
19. INSTALL 4" TEE
20. INSTALL SANITARY SEWER CLEANOUT PER CITY OF MADERA STD. S-12A
21. INSTALL CHRISTY CATCH BASIN PER DETAIL ON SHEET C-3
22. INSTALL 36" ADS NYLOPLAST MANHOLE WITH SLOTTED TRAFFIC RATED LID PER MANUFACTURER SPECIFICATIONS
23. INSTALL OUTFALL STRUCTURE PER DETAIL "C" THIS SHEET
24. INSTALL 4'X4' CATCH BASIN AND SUMP PUMP PER DETAIL "A" THIS SHEET
25. INSTALL ADS 90° BEND PER DETAIL "D" THIS SHEET
26. MAINTAIN MINIMUM 1' CLEARANCE BETWEEN WATER AND SEWER DEPTHS TO BE FIELD VERIFIED.

FIRE NOTES:

1. UNDERGROUND TO BE INSTALLED, TESTED AND FLUSHED PER NFPA 24, 2013 ED.
2. ONLY NEW, LISTED AND APPROVED DEVICES SHALL BE INSTALLED IN THIS SYSTEM.
3. ALL VALVES SHALL HAVE A PERMANENTLY AFFIXED SIGN INDICATING ITS FUNCTION.
4. CLEARANCE PIPING THROUGH HOLES IN PLATFORMS, FOUNDATIONS, WALLS, OR FLOORS: HOLES SHALL BE NOMINALLY 2" LARGER THAN THE PIPE FOR 1" NOMINAL TO 3 ½", AND 4" LARGER THAN THE PIPE FOR PIPE 4" NOMINAL AND LARGER.
5. IT IS THE CONTRACTOR'S RESPONSIBILITY TO MAKE WORK AVAILABLE FOR INSPECTION.
6. AN APPROVED SET OF PLANS SHALL BE MAINTAINED ON THE JOB SITE.
7. AN APPOINTMENT SHALL BE MADE A MINIMUM OF TWO WORKING DAYS IN ADVANCE FOR ALL TESTS AND INSPECTIONS
8. A SEPARATE PERMIT IS REQUIRED FOR THE INSTALLATION OF THE UG FIRE MAIN SYSTEM. THE PERMIT SHALL BE OBTAINED FROM THE BUILDING DEPARTMENT.
9. A CONTROL VALVE IS REQUIRED FOR EACH PROPOSED FIRE HYDRANT
10. A CHECK VALVE IS REQUIRED BETWEEN THE FDC LINE "T" CONNECTION AND THE SUPPLY SYSTEM TO PREVENT WATER FROM PUSHING BACK TO THE SYSTEM.

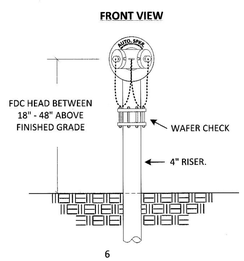

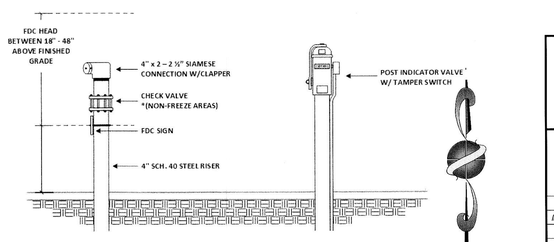

FDC/PIV DETAIL

SCALE 1" = 40'

0 20' 40' 80'

PRECISION CIVIL ENGINEERING, INC

REGISTERED PROFESSIONAL ENGINEER NATHAN M. CLEAVES NO. 67552 CIVIL STATE OF CALIFORNIA

Know what's below. Call before you dig.

P:\CIVIL 3D PROJECTS\2021\21-033\PRODUCTION DRAWINGS\CIVIL\21-033 UTILITY PLAN.DWG 10/25/2022 9:42:16 AM

CONSTRUCTION PLANS FOR

SOUTH SCHNOOR AVENUE AND WEST ALMOND AVENUE

UTILITY PLAN

CITY OF MADERA
ENGINEERING DEPARTMENT
428 W. YOSEMITE AVENUE
MADERA, CALIFORNIA 93638

PLAN REVISION

INITIAL ISSUE DATE		
CHANGE	DATE	APPROVAL

WORK ORDER No.

SHEET C-4 OF C-5 SHEETS

APPROVAL		DATE
CITY ENGINEER		10-26-22
REVIEWED BY:		
PUBLIC WORKS:		
FIRE DEPARTMENT:		
PARK DEPARTMENT:		
DESIGNED BY: NMG	CHECKED BY:	
DRAWN BY: CPG	INSPECTED BY:	
CONSTRUCTION DATES	DATE STARTED	DATE COMPLETED
CONTRACTOR:		
PROJECT No. SPR 2021-24		

ADDITIONAL TEMPORARY BMPs TO BE USED ON SITE

CALTRANS FACT SHEET	BMP NAME
WM-01	MATERIAL DELIVERY AND STORAGE
WM-02	MATERIAL USE
WM-03	STOCKPILE MANAGEMENT
WM-04	SPILL PREVENTION CONTROL
WM-05	SOLID WASTE MANAGEMENT
WM-06	HAZARDOUS WASTE MANAGEMENT
WM-07	CONTAMINATED SOIL MANAGEMENT
WM-08	CONCRETE WASTE MANAGEMENT
WM-09	SANITARY-SEPTIC WASTE MANAGEMENT
WM-10	LIQUID WASTE MANAGEMENT
SC-5	FIBER ROLLS
SC-7	STREET SWEEPING
SC-10	STORM DRAIN INLET PROTECTION
TC-1	STABILIZED CONSTRUCTION ENTRANCE AND EXIT
TC-2	STABILIZED CONSTRUCTION ROADWAY
TC-3	ENTRANCE OUTLET TIRE WASH
EC-1	SCHEDULING
EC-15	SOIL PREPARATION- ROUGHENING
EC-16	NON-VEGITATED STABILIZATION
NS-1	WATER CONSERVATION PRACTICES
NS-2	DEWATERING OPERATION
NS-3	PAVING AND GRINDING OPERATION
NS-8	VEHICLE AND EQUIPMENT CLEANING
NS-9	VEHICLE AND EQUIPMENT FUELING
NS-10	VEHICLE AND EQUIPMENT MAINTENANCE
NS-12	CONCRETE CURING
NS-13	MATERIAL AND EQUIPMENT USE OVER WATER
NS-14	CONCRETE FINISHING
NS-15	DEMOLITION REMOVAL ADJACENT TO WATER

GENERAL NOTES:

1. IT IS THE CONTRACTORS RESPONSIBILITY TO VERIFY THAT ALL BMP'S NECESSARY ARE IMPLEMENTED INCLUDING, BUT NOT LIMITED TO THE METHODS SHOWN ON THE EROSION CONTROL PLAN.
2. STORM WATER DISCHARGES AND AUTHORIZED NON-STORM WATER DISCHARGES SHALL NOT CONTAIN A HAZARDOUS SUBSTANCE EQUAL TO OR IN EXCESS OF REPORTABLE QUANTITIES ESTABLISHED IN 40 C.F.R. 117.3 AND 302.4, UNLESS A SEPARATE NPDES PERMIT HAS BEEN ISSUED TO REGULATE THOSE DISCHARGES.
3. MINIMIZE OR PREVENT POLLUTANTS IN STORM WATER DISCHARGES AND AUTHORIZED NON-STORM WATER DISCHARGES THROUGH THE USE OF CONTROLS, STRUCTURES, AND MANAGEMENT PRACTICES THAT ACHIEVE BAT FOR TOXIC AND NON-CONVENTIONAL POLLUTANTS AND BCT FOR CONVENTIONAL POLLUTANTS.
4. CONDUCT AN INVENTORY OF THE PRODUCTS USED AND/OR EXPECTED TO BE USED AND THE END PRODUCTS THAT ARE PRODUCED AND/OR EXPECTED TO BE PRODUCED. THIS DOES NOT INCLUDE MATERIALS AND EQUIPMENT THAT ARE DESIGNED TO BE OUTDOORS AND EXPOSED TO ENVIRONMENTAL CONDITIONS (i.e. POLES, EQUIPMENT PADS, CABINETS, CONDUCTORS, INSULATORS, BRICKS, ETC.)
5. COVER AND BERM LOOSE STOCKPILED CONSTRUCTION MATERIALS THAT ARE NOT ACTIVELY BEING USED (i.e. SOIL, SPOILS, AGGREGATE, FLY-ASH, STUCCO, HYDRATED LIME, ETC.)
6. STORE CHEMICALS IN WATERTIGHT CONTAINERS (WITH APPROPRIATE SECONDARY CONTAINMENT TO PREVENT ANY SPILLAGE OR LEAKAGE) IN A STORAGE SHED (COMPLETELY ENCLOSED.)
7. MINIMIZE EXPOSURE OF CONSTRUCTION MATERIALS TO PRECIPITATION. THIS DOES NO INCLUDE MATERIALS AND EQUIPMENT THAT ARE DESIGNED TO BE OUTDOORS AND EXPOSED TO ENVIRONMENTAL CONDITIONS.
8. IMPLEMENT BMPs TO PREVENT THE OFF-SITE TRACKING OF LOOSE CONSTRUCTION AND LANDSCAPE MATERIALS.
9. PREVENT DISPOSAL OF ANY RINSE OR WASH WATERS OR MATERIALS ON IMPERVIOUS OR PERVIOUS SITE SURFACES OR INTO THE STORM DRAIN SYSTEM.
10. ENSURE THE CONTAINMENT OF SANITATION FACILITIES (e.g. PORTABLE TOILETS) TO PREVENT DISCHARGES OF POLLUTANTS TO THE STORM WATER DRAINAGE SYSTEM OR RECEIVING WATER.
11. CLEAN OR REPLACE SANITATION FACILITIES AND INSPECT THEM REGULARLY FOR LEAKS AND SPILLS.
12. COVER WASTE DISPOSAL CONTAINERS AT THE END OF EVERY BUSINESS DAY AND DURING A RAIN EVENT.
13. PREVENT DISCHARGES FROM WASTE DISPOSAL CONTAINERS TO THE STORM WATER DRAINAGE SYSTEM OR RECEIVING WATER.
14. CONTAIN AND SECURELY PROTECT STOCKPILED WASTE MATERIAL FROM WIND AND RAIN AT ALL TIMES UNLESS ACTIVELY BEING USED.
15. IMPLEMENT PROCEDURES THAT EFFECTIVELY ADDRESS HAZARDOUS AND NON-HAZARDOUS SPILLS.
16. DEVELOP A SPILL RESPONSE AND IMPLEMENTATION ELEMENT OF THE SWPPP PRIOR TO COMMENCEMENT OF CONSTRUCTION ACTIVITIES. EQUIPMENT AND MATERIALS FOR CLEANUP OF SPILLS SHALL BE AVAILABLE ON SITE AND THAT SPILLS AND LEAKS SHALL BE CLEANED UP IMMEDIATELY AND DISPOSED OF PROPERLY. APPROPRIATE SPILL RESPONSE PERSONNEL SHOULD BE ASSIGNED AND TRAINED.
17. ENSURE THE CONTAINMENT OF CONCRETE WASHOUT AREAS AND OTHER WASHOUT AREAS THAT MAY CONTAIN ADDITIONAL POLLUTANTS SO THERE IS NO DISCHARGE INTO THE UNDERLYING SOIL AND ONTO THE SURROUNDING AREAS.
18. PREVENT OIL, GREASE, OR FUEL FROM VEHICLE STORAGE OR MAINTENANCE FROM LEAKING INTO THE GROUND, STORM DRAINS OR SURFACE WATERS.
19. PLACE ALL EQUIPMENT OR VEHICLES, WHICH ARE TO BE FUELED, MAINTAINED AND STORED IN A DESIGNATED AREA FITTED WITH APPROPRIATE BMPs.
20. CLEAN LEAKS IMMEDIATELY AND DISPOSE OF LEAKED MATERIALS PROPERLY.
21. CONTAIN FERTILIZERS AND OTHER STOCKPILED LANDSCAPE MATERIALS SUCH AS MULCHES AND TOPSOIL WHEN THEY ARE NOT ACTIVELY BEING USED.
22. DISCONTINUE THE APPLICATION OF ANY ERODIBLE LANDSCAPE MATERIAL WITHIN TWO DAYS BEFORE A FORECASTED RAIN EVENT OR DURING PERIODS OF PRECIPITATION.
23. APPLY ERODIBLE LANDSCAPE MATERIAL AT QUANTITIES AND APPLICATION RATES ACCORDING TO MANUFACTURER RECOMMENDATIONS OR BASED ON WRITTEN SPECIFICATION BY KNOWLEDGEABLE AND EXPERIENCED FIELD PERSONNEL.
24. STACK ERODIBLE LANDSCAPE MATERIAL ON PALLETS AND COVER OR STORE SUCH MATERIALS WHEN NOT BEING USED OR APPLIED.
25. CONDUCT AN ASSESSMENT AND CREATE A LIST OF POTENTIAL POLLUTANT SOURCES AND IDENTIFY ANY AREAS OF THE SITE WHERE ADDITIONAL BMPs ARE NECESSARY TO REDUCE OR PREVENT POLLUTANTS IN STORM WATER DISCHARGES AND AUTHORIZED NON-STORM WATER DISCHARGES. KEEP THIS LIST WITH THE SWPPP AND IDENTIFY ALL NON-VISIBLE POLLUTANTS WHICH ARE KNOWN, OR SHOULD BE KNOWN, TO OCCUR ON THE CONSTRUCTION SITE.
26. IMPLEMENT GOOD HOUSEKEEPING MEASURES ON THE CONSTRUCTION SITE TO CONTROL THE AIR DEPOSITION OF SITE MATERIALS AND FROM SITE OPERATIONS. SUCH PARTICULATES CAN INCLUDE, BUT ARE NOT LIMITED TO, SEDIMENT, NUTRIENTS, TRASH, METALS, BACTERIA, OIL, GREASE, AND ORGANICS.
27. WASH VEHICLES IN SUCH A MANNER AS TO PREVENT NON-STORM WATER DISCHARGES TO SURFACE WATERS OR DRAINAGE SYSTEMS.
28. CLEAN STREETS IN SUCH A MANNER AS TO PREVENT UNAUTHORIZED NON-STORM WATER DISCHARGES FROM REACHING SURFACE WATER OR DRAINAGE SYSTEMS.
29. PROVIDE EFFECTIVE SOIL COVER FOR INACTIVE AREAS AND ALL FINISHED SLOPES, OPEN SPACE, UTILITY BACKFILL, AND COMPLETED LOTS.
30. LIMIT THE USE OF PLASTIC MATERIALS WHEN MORE SUSTAINABLE, ENVIRONMENTALLY FRIENDLY ALTERNATIVES EXIST. WHERE PLASTIC MATERIALS ARE DEEMED NECESSARY, THE DISCHARGER SHALL CONSIDER THE USE OF PLASTIC MATERIALS RESISTANT TO SOLAR DEGRADATION.
31. ESTABLISH AND MAINTAIN EFFECTIVE PERIMETER CONTROLS AND STABILIZE ALL CONSTRUCTION ENTRANCES AND EXITS TO SUFFICIENTLY CONTROL EROSION AND SEDIMENT DISCHARGES FROM THE SITE.
32. EFFECTIVELY MANAGE ALL RUN-ON, ALL RUNOFF WITHIN THE SITE AND ALL RUNOFF THAT DISCHARGES OFF THE SITE. RUN-ON FROM OFF SITE SHALL BE DIRECTED AWAY FROM ALL DISTURBED AREAS OR SHALL COLLECTIVELY BE IN COMPLIANCE WITH THE EFFLUENT LIMITATIONS.
33. ALL INSPECTION, MAINTENANCE REPAIR AND SAMPLING ACTIVITIES AT THE PROJECT LOCATION SHALL BE PERFORMED OR SUPERVISED BY A QUALIFIED SWPPP PRACTITIONER. THE QSP MAY DELEGATE ANY OR ALL OF THESE ACTIVITIES TO AN EMPLOYEE TRAINED TO DO THE TASK(S) APPROPRIATELY, BUT SHALL ENSURE ADEQUATE DEPLOYMENT.
34. PERFORM WEEKLY INSPECTIONS AND OBSERVATIONS, AND AT LEAST ONCE EACH 24-HOUR PERIOD DURING EXTENDED STORM EVENTS TO IDENTIFY AND RECORD BMPs THAT NEED MAINTENANCE TO OPERATE EFFECTIVELY, THAT HAVE FAILED, OR THAT COULD FAIL TO OPERATE AS INTENDED. INSPECTORS SHALL BE THE QSP OR TRAINED BY THE QSP. COMPLETE AN INSPECTION CHECKLIST INCLUDING REQUIRED INFORMATION FOR EACH INSPECTION.
35. IMPLEMENT REPAIRS OR DESIGN CHANGES TO BMPs WITHIN 72 HOURS OF IDENTIFICATION AND COMPLETE THE CHANGES AS SOON AS POSSIBLE.
36. REFER TO STORM WATER POLLUTION PREVENTION PLAN FOR ADDITIONAL INFORMATION ON BMP'S USED FOR SITE.
37. 100 PERCENT OF TREES, STUMPS, ROCKS AND ASSOCIATED VEGETATION AND SOILS RESULTING PRIMARILY FROM LAND CLEARING SHALL BE REUSED OR RECYCLED.
38. THE CONTRACTOR, OWNER & SUB-CONTRACTORS (BUT NOT LIMITED TO) ARE RESPONSIBLE FOR SWPPP (STORM WATER POLLUTION PREVENTION PROGRAM), THE IMPLEMENTATIONS AND VIOLATIONS. THEY SHOULD BE TRAINED AS NEEDED BY THE QSP (QUALIFIED SWPPP PRACTITIONER) AND OR HIS DESIGNATED REPRESENTATIVE.
39. ALL MATERIALS FOR THE PROJECT, INCLUDING THE NATIVE SOIL (SEDIMENT) ARE CONSIDERED POLLUTANTS. THE POLLUTANTES SHALL NOT LEAVE THE SITE VIA DRAINAGE, WHEEL TRACKING AND/OR BY WIND. ALL MATERIALS INCLUDING WASTE ARE TO LEAVE THE SITE IN ADEQUATELY CONTAINED CONTAINERS.
40. ALL WASTE AND STORAGE CONTAINERS SHALL BE KEPT COVERED AT ALL TIMES TO PREVENT LEACHING OF THE WASTE & MATERIALS FROM ESCAPING THEIR CONTAINER AND ONTO THE SITE. HAZARDOUS WASTE(PAINTS, STAINS, GLUES, ADHESIVES, ETC) SHALL BE STORED IN COVERED AREAS WITH SECONDARY CONTAINMENT FOR LIQUID MATERIALS IN CASE OF ACCIDENTAL LEAKAGE/SPILLAGE.
41. REFER TO THE SWPPP PLAN (THE BMP BINDER OF DOCUMENTS) FOR DETAILS ON BMP'S (BEST MANAGEMENT PRACTICES) USED FOR THE SITE. IT SHALL BE KEPT ON THE SITE AT ALL TIMES AND BE MADE AVAILABLE FOR THE QSP AND OTHERS INSPECTING THE SITE. A DIGITAL COPY CAN BE FOUND AT: HTTPS://SMARTS.WATERBOARDS.CA.GOV/SMARTS/FACES/PUBLICDATAACCESS/ WDID#5F10EXAMPLE.

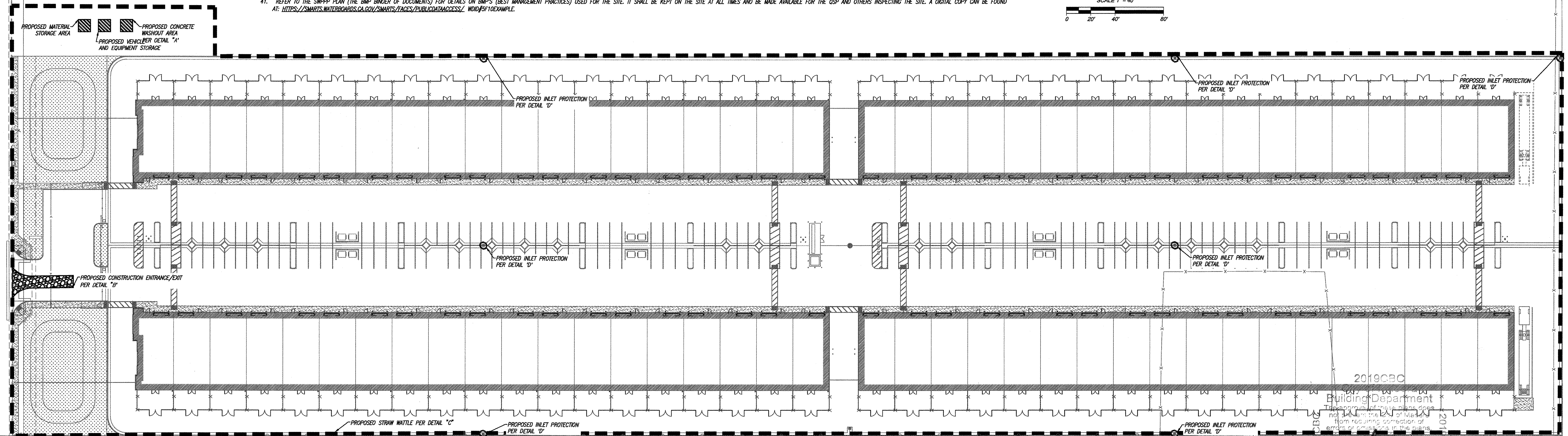

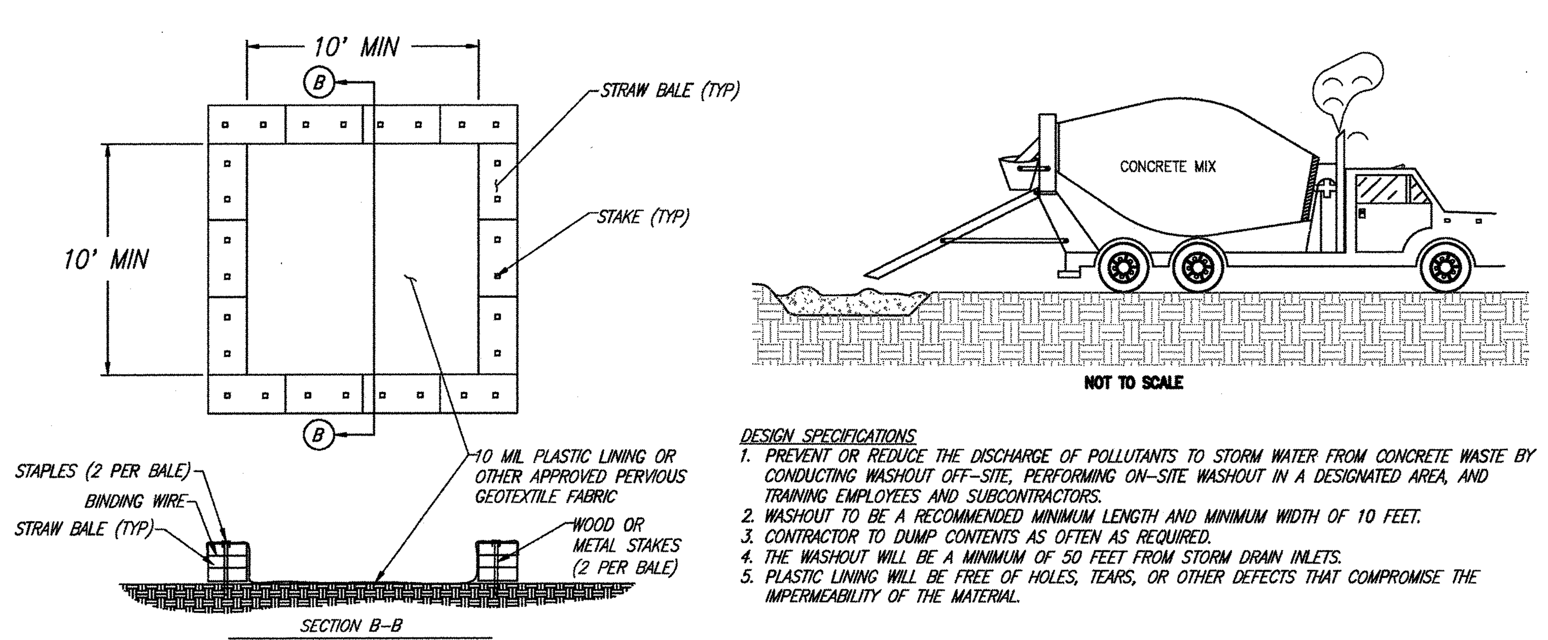

DESIGN SPECIFICATIONS
1. PREVENT OR REDUCE THE DISCHARGE OF POLLUTANTS TO STORM WATER FROM CONCRETE WASTE BY CONDUCTING WASHOUT OFF-SITE, PERFORMING ON-SITE WASHOUT IN A DESIGNATED AREA, AND TRAINING EMPLOYEES AND SUBCONTRACTORS.
2. WASHOUT TO BE A RECOMMENDED MINIMUM LENGTH AND MINIMUM WIDTH OF 10 FEET.
3. CONTRACTOR TO DUMP CONTENTS AS OFTEN AS REQUIRED.
4. THE WASHOUT WILL BE A MINIMUM OF 50 FEET FROM STORM DRAIN INLETS.
5. PLASTIC LINING WILL BE FREE OF HOLES, TEARS, OR OTHER DEFECTS THAT COMPROMISE THE IMPERMEABILITY OF THE MATERIAL.

(A) **SECTION**
NOT TO SCALE

DESIGN SPECIFICATIONS
1. STONE APPLIED TO THE PAD WILL BE 2-INCH STONE.
2. THE LENGTH OF THE PAD WILL NOT BE LESS THAN 50 FEET.
3. THE THICKNESS OF THE PAD WILL A MINIMUM OF 6 INCHES.
4. THE WIDTH OF THE PAD WILL BE A MINIMUM OF 10 FEET.
5. FILTER FABRIC WILL BE PLACED OVER THE ENTIRE AREA BEFORE PLACING STONE.

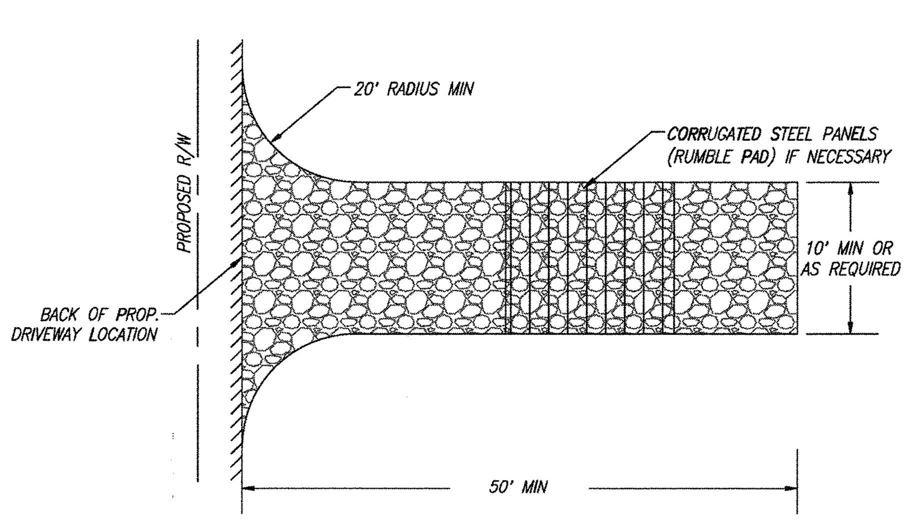

(B) SECTION
NO SCALE

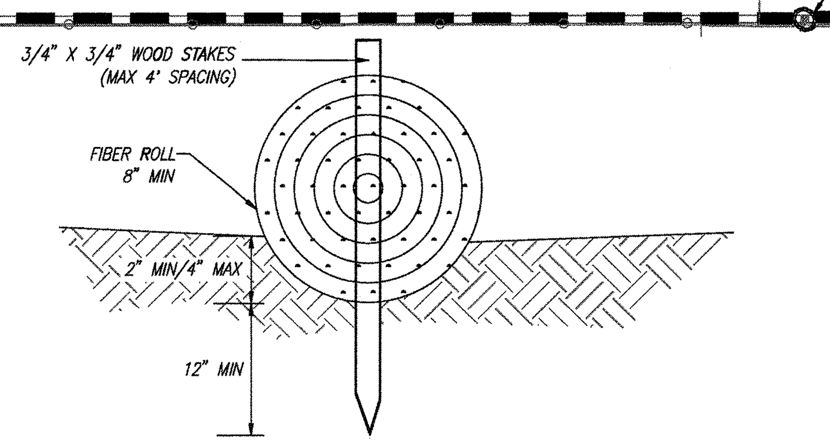

DESIGN SPECIFICATIONS
1. STRAW WATTLES (FIBER ROLLS) WILL BE EITHER PREFABRICATED ROLLS OR ROLLED TUBES OF GEOTEXTILE FABRIC.
2. FIELD ROLLED FIBER ROLL IS ASSEMBLED BY ROLLING THE LENGTH OF GEOTEXTILE FABRIC INTO A TUBE OF MINIMUM 8-INCH DIAMETER AND BINDING THE ROLL AT EACH END AND EVERY 4 FEET ALONG THE LENGTH OF THE ROLL WITH JUTE-TYPE TWINE.
3. RAKE FREE ANY DIRT CLOGS OR STANDING VEGETATION IN AREAS TO RECEIVE FIBER ROLLS.
4. PLACE FIBER ROLLS INTO A 2 TO 4 INCH DEEP TRENCH WITH A WIDTH EQUAL TO THE DIAMETER OF THE FIBER ROLL.
5. WALK ON TOP OF THE ROLL TO SEAT TIGHTLY AGAINST THE SOIL.
6. STAKE FIBER ROLLS INTO A 2 TO 4 INCH DEEP TRENCH WITH A WIDTH EQUAL TO THE DIAMETER OF THE FIBER ROLL.
7. USE WOOD STAKES WITH A NOMINAL CLASSIFICATION OF 0.75 X 0.75 INCH AND MINIMUM LENGTH OF 24 INCHES.
8. DRIVE STAKES AT THE END OF EACH FIBER ROLL AND SPACED 4 FEET MAXIMUM ON CENTER.
9. BERM THE BACKSIDE OF THE FIBER ROLL WITH SOIL TO ENSURE SEDIMENT ENTRAPMENT.

(C) STRAW WATTLE

2019CBC
City of Madera Building Department
The approval of these plans does not prevent the City of Madera from requiring correction of errors or omissions in the plans. Subject to field inspections and approvals, laws, Codes and Ordinances
APPROVED
By: MAR 0 3 2022

PRECISION CIVIL ENGINEERING, INC

REGISTERED PROFESSIONAL ENGINEER NATHAN M. GLEAVES NO. 67552 CIVIL STATE OF CALIFORNIA

CONSTRUCTION PLANS FOR
SOUTH SCHNOOR AVENUE AND WEST ALMOND AVENUE
EROSION CONTROL PLAN

CITY OF MADERA
ENGINEERING DEPARTMENT
428 W. YOSEMITE AVENUE
MADERA, CALIFORNIA 93638

PLAN REVISION
INITIAL ISSUE DATE

CHANGE	DATE	APPROVAL

WORK ORDER No.

SHEET C-5 OF C-5 SHEETS

APPROVAL		DATE	
CITY ENGINEER			
REVIEWED BY			
PUBLIC WORKS:			
FIRE DEPARTMENT:			
PARK DEPARTMENT:			
DESIGNED BY:	NMG	CHECKED BY:	
DRAWN BY:	CPG	INSPECTED BY:	
CONSTRUCTION DATES	DATE STARTED		DATE COMPLETED
CONTRACTOR:			
PROJECT No.	SPR 2021-24		

P:\CIVIL 3D PROJECTS\2021\21-033\PRODUCTION DRAWINGS\CIVIL\21-033 ECP.DWG 11/17/2021 3:15:31 PM

IRRIGATION SPECIFICATIONS

GENERAL REQUIREMENTS

1. CONTRACTOR'S DUTIES:
   a. EXCEPT AS SPECIFICALLY NOTED, PROVIDE AND PAY FOR:
      i. LABOR, MATERIALS, AND EQUIPMENT
      ii. TOOLS, CONSTRUCTION EQUIPMENT, AND MACHINERY
      iii. WATER, HEAT, AND UTILITIES REQUIRED FOR CONSTRUCTION
      iv. OTHER FACILITIES AND SERVICES NECESSARY FOR PROPER EXECUTION AND COMPLETION OF WORK.
2. PAY ALL LEGALLY REQUIRED SALES, CONSUMER, AND USE TAXES.
3. SECURE AND PAY FOR, AS NECESSARY FOR PROPER EXECUTION AND COMPLETION OF WORK AND AS APPLICABLE T TIME OF RECEIPT OF BIDS:
   a. PERMITS
   b. GOVERNMENT FEES
   c. LICENSES
4. GIVE REQUIRED NOTICES.

LANDSCAPE IRRIGATION SYSTEM

1. DRAWINGS ARE GENERALLY DIAGRAMMATIC AND INDICATIVE OF THE WORK TO BE INSTALLED.
   a. DUE TO THE SCALE OF THE DRAWINGS, IT IS IMPOSSIBLE TO INDICATE ALL OFFSETS, FITTINGS, SLEEVES AND OTHER COMPONENTS WHICH MAY BE REQUIRED. CAREFULLY INVESTIGATE STRUCTURAL AND FINISHED CONDITIONS AFFECTING THE WORK AND PLAN ACCORDINGLY.
   b. INSTALL IN SUCH A MANNER AS TO AVOID CONFLICTS BETWEEN IRRIGATION SYSTEM, PLANTING, AND ARCHITECTURAL FEATURES.
   c. EQUIPMENT SHOWN IN PAVED AREAS IS FOR DESIGN CLARIFICATION ONLY, UNLESS OTHERWISE SPECIFIED.
   d. INSTALL IRRIGATION EQUIPMENT WITHIN SHRUB AREAS WHEREVER POSSIBLE.
2. WORK SHALL CONSIST OF FURNISHING ALL MATERIALS, SERVICES, AND EQUIPMENT NECESSARY TO FULLY INSTALL AS INDICATED, A COMPLETE AND SATISFACTORY IRRIGATION SYSTEM.
   a. LOCATION OF CONNECTION POINTS SHOWN MAY BE APPROXIMATE ONLY, THE CONTRACTOR SHALL MAKE PROPER AND APPROVED CONNECTIONS TO THESE POINTS WHERE ACTUALLY LOCATED.
   b. THE CONTRACTOR SHALL PROVIDE ALL WIRING AND PIPING REQUIRED FOR THE INSTALLATIONS.
   c. THE OWNER SHALL PROVIDE THE ELECTRICAL AND WATER OUTLETS AS CALLED FOR. VERIFY SITE LOCATION FOR ELECTRICAL SOURCE.
   d. THE LANDSCAPE CONTRACTOR SHALL OBTAIN AND PAY FOR ALL REQUIRED PERMITS AND INSPECTIONS.
3. DO NOT WILLFULLY INSTALL THE IRRIGATION SYSTEM AS SHOWN ON THE DRAWING WHEN IT IS OBVIOUS IN THE FIELD THAT UNKNOWN OBSTRUCTIONS, GRADE DIFFERENCES OR DISCREPANCIES IN AREA DIMENSIONS EXIST THAT MIGHT NOT HAVE BEEN CONSIDERED DURING SYSTEM DESIGN.
4. BEFORE SUBMITTING A BID, EACH BIDDER SHALL CAREFULLY EXAMINE THE DRAWINGS AND SPECIFICATIONS, AND VISIT THE SITE TO FULLY INFORM HIMSELF AS TO ALL EXISTING CONDITIONS AND LIMITATIONS APPLYING TO THE WORK.
5. ALL EQUIPMENT, MATERIALS AND INSTALLATION SHALL COMPLY WITH ALL REQUIREMENTS OF ANY AND ALL LEGALLY CONSTITUTED AUTHORITIES HAVING JURISDICTION; NOTHING IN EITHER THE PLANS OR SPECIFICATIONS SHALL BE CONSTRUED AS WAIVING ANY SUCH REQUIREMENTS.
6. RECORD AND AS-BUILT DRAWINGS: CONTRACTOR IS TO PROVIDE OWNER WITH (2) SETS OF REPRODUCIBLE OF FIELD CORRECTED DRAWINGS, MARKED AS "AS-BUILT" OR "RECORD DRAWING" AND DATED.
7. GUARANTEE:CONTRACTOR IS TO GUARANTEE IRRIGATION SYSTEM FOR A PERIOD OF ONE (1) YEAR. PROVIDE A WRITTEN GUARANTEE IN THE FORM AS STIPULATED IN THE GENERAL CONDITIONS.

WATER SUPPLY

1. SYSTEM DESIGN IS BASED ON A MINIMUM OPERATING PRESSURE AND MAXIMUM GPM DEMAND AS SHOWN ON IRRIGATION LEGEND.
2. VERIFY PRESSURE PRIOR TO START OF CONSTRUCTION
   a. IF PRESSURE DOES NOT MEET MINIMUM CONTACT THE GENERAL CONTRACTOR AND OWNER.

IRRIGATION MATERIALS

1. ALL MATERIALS AND EQUIPMENT SHALL BE OF THE BEST GRADE OF THEIR RESPECTIVE KINDS AND SHALL BE OF THE SAME BRAND OR MANUFACTURE THROUGHOUT.
2. ALL MATERIAL AND EQUIPMENT SHALL BE NEW AND IN PERFECT CONDITION WHEN INSTALLED AND SHALL BE FURNISHED IN AMPLE QUANTITIES AT THE PROPER TIME.
3. MAIN LINE:
   PIPE FROM SOURCE OF SUPPLY TO CONTROL VALVES AND HOSE BIBS SHALL BE SCHEDULE 40 OR CLASS 315 TYPE 1120 P.V.C.
4. LATERAL LINE:
   SHALL BE CLASS 200 TYPE 1120 P.V.C. FOR PIPING DOWNSTREAM FROM VALVES.
5. ALL PLASTIC PIPE SHALL BE MARKED WITH THE MANUFACTURE'S NAME, TYPE AND CLASS OF PIPE, SIZE AND NSF APPROVAL.
6. PLASTIC PIPE FITTINGS:
   SHALL BE SCHEDULE 40 P.V.C. TAPERED SOCKET TYPE, SUITABLE FOR EITHER SOLVENT WELD OF SCREWED CONNECTIONS. FLANGE AND SADDLE TEES WILL NOT BE ALLOWED. SOLVENT SHALL BE AS RECOMMENDED BY THE PIPE AND FITTING MANUFACTURER.
7. SHUT-OFF BALL OR GATE VALVES:
   SHALL BE 200 POUND CLASS A.W.W.A APPROVED, BRASS BODY WITH RISING STEM, UNLESS OTHERWISE SPECIFIED, INSTALLED WITH PLASTIC OF EQUAL BOX AND LID
8. AUTOMATIC IRRIGATION CONTROLLER:
   a. SHALL BE AS INDICATED ON THE DRAWINGS, COMPLETE WITH ELECTRICAL HOOK UP AND PROPER MOUNTING. ANY CONTROL WIRE EXPOSED AT THE CONTROLLER SHALL BE ENCASED IN ELECTRICAL CONDUIT OF THE SIZE REQUIRED.
   b. 120V ELECTRICAL POWER CONNECTION TO BE PROVIDED BY ELECTRICAL CONTRACTOR, OR MAKE REQUIRED ELECTRICAL CONNECTION FROM CONTROLLER WITH A NON-METERED ELECTRICAL PEDESTAL
      i. ELECTRICAL CONTRACTOR TO PROVIDE SHOP DRAWINGS FOR JURISDICTION APPROVAL
   c. FINAL LOCATION SHALL BE DETERMINED BY OWNER AND/OR GENERAL CONTRACTOR.
9. REMOTE CONTROL VALVE:
   a. SHALL BE AS INDICATED ON THE DRAWINGS WITH FLOW ADJUSTMENT AND MANUAL BLEED DEVICE, WITH PLASTIC OF EQUAL BOX AND LID.
   b. CONNECT TO CONTROLLERS IN THE OPERATING SEQUENCE INDICATED ON THE DRAWINGS.
   c. ALL CONTROL VALVES ON LINE MUST BE 8" MIN. AND 12"MAXIMUM BELOW GRADE.
10. CONTROL WIRE:
   a. SHALL BE UF, SOLID COPPER WIRE, VINYL INSULATED 600 V. RATING, FOR DIRECT BURIAL INSTALLATIONS. CODING SHALL BE COLORED WIRE FOR PILOT WIRE, WHITE FOR COMMON GROUND WIRE.
   b. INSTALL WIRING ALONG SAME ROUTE AS PRESSURE MAINLINE SUPPLY OR LATERALS LINES WHENEVER POSSIBLE
   c. WHERE MORE THAN ONE WIRE IS PLACED IN A TRENCH, TAPE WIRING TOGETHER AT TEN FOOT (10FT) INTERVALS.
   d. PROVIDE AN EXPANSION COIL WITHIN THREE FEET OF EACH WIRE CONNECTION.
   e. MAKE SPLICES USING 3M DBY-6 DIRECT BURY SPLICE KIT.
      i. USE ONE SPICE PER CONNECTING SEALING PACK.
      ii. THERE TO BE NO EXPOSED WIRE ENDS. ALL SPLICES ARE TO BE PROTECTED WITH SPLICE KIT.
11. BACKFLOW DEVICE / VACUUM BREAKERS:
   a. SHALL BE AS INDICATED ON THE DRAWINGS AND AS APPROVED BY AUTHORITIES HAVING JURISDICTION, INSTALLED TO MEET LOCAL CODES. CERTIFICATION REQUIRED UPON INSTALLATION PRIOR TO FINAL.
   b. RISERS FOR VACUUM BREAKER SHALL BE SCHEDULE 40 GALVANIZED STEEL OR BRASS.
   c. LOCATE VACUUM BREAKERS IN SHRUB AREAS ONLY.
   d. BACKFLOW PREVENTION DEVICE TO BE INSTALLED 12" ABOVE HIGHEST SPRINKLER OUTLET ON THE CIRCUIT.

WORK PROCEDURE:

1. PLASTIC PIPE AND FITTINGS ASSEMBLING: CONTRACTOR SHALL USE ONLY THE SOLVENT SUPPLIED AND RECOMMENDED BY THE MANUFACTURER TO MAKE PLASTIC PIPE JOINT.THE PIPE AND FITTINGS SHALL BE THOROUGHLY CLEANED OF DIRT, DUST, AND MOISTURE BEFORE APPLYING SOLVENT.
2. INSTALLATION OF PIPING: PIPE LINES SHALL BE INSTALLED IN THE LOCATIONS AND OF THE SIZES SHOWN ON THE DRAWINGS OR SPECIFIED HEREIN AND OF THE MATERIALS AND WORKMANSHIP HEREIN SPECIFIED.
3. WHERE PIPING ON THE DRAWINGS IS SHOWN UNDER PAVED AREAS BUT RUNNING PARALLEL AND ADJACENT TO PLANTING AREAS, THE INTENT OF THE DRAWINGS IS TO INSTALL THE PIPING IN THE PLANTING AREA.
4. ALL PIPE SHALL BE ASSEMBLED FREE FROM DIRT. THE MAIN LINE SUPPLY SHALL BE FLUSHED OUT AND TESTED FOR LEAKS BEFORE BACK FILLING AND WITH CONTROL VALVES IN PLACE AND BEFORE LATERAL PIPES ARE CONNECTED TO VALVES. EACH SECTION OF LATERAL PIPE SHALL BE FLUSHED OUT BEFORE SPRINKLER HEADS ARE ATTACHED. GENERALLY, PIPING UNDER CONCRETE SHALL BE DONE BY JACKING, BORING OR HYDRAULIC DRIVING.
5. PIPING DEPTH: INSTALL PIPING WITH AT THE MINIMUM FOLLOWING DEPTHS,
   GALVANIZED STEEL: 18" DEPTH
   PVC MAINLINE: 18" DEPTH
   PVC LATERAL LINE: 12" DEPTH
   CONTROL WIRING: 18" DEPTH
6. ALL PIPE INSTALLED UNDER CONCRETE TO BE SCH 40 PVC TO BE INSTALLED PRIOR TO PAVING.
7. CONTROL WIRE SLEEVES SHOULD BE OF SUFFICIENT SIZE UNDER ALL PAVED AREAS BEFORE PAVING
8. SLEEVES:
   a. PROVIDE PVC SCHEDULE 40 SLEEVES UNDER ALL WALKWAYS OR DRIVEWAYS FOR ALL LATERAL AND MAINLINES (2X DIAMETER OF LINE). EXCEPT AS NOTED IN OTHER PARTS OF THIS SPECIFICATION OR IN THE DRAWINGS, INSTALLATION OF PIPE AND FITTINGS SHALL BE AS OUTLINED IN THE MANUALS AS FURNISHED BY PIPE MANUFACTURER WHICH SHALL BE DEEMED AND CONSTRUED AS PART OF THIS SPECIFICATION.
9. POP-UPS:
   a. FLUSH IRRIGATION SYSTEM PIPING PRIOR TO INSTALLATION OF POP-UPS.
   b. SHALL BE OF THE TYPES AND SIZES INDICATED ON THE DRAWINGS.
   c. INSTALL WHERE INDICATED ON THE DRAWINGS AND IN ACCORDANCE WITH THE MANUFACTURER'S RECOMMENDATIONS.
   d. SET TOPS OF SHRUB HEADS 6" ABOVE GRADE.
   e. POP-UP IRRIGATION SHALL NOT BE PLACED WITHIN TWO FEET (2 FT) OF BACK OF SIDEWALKS, CURBS AND OTHER NON-PERMEABLE SURFACES.
10. PLASTIC PIPE FITTING ASSEMBLIES SHALL BE ASSEMBLED USING ONLY THE SOLVENT SUPPLIED AND RECOMMENDED BY THE MANUFACTURER TO MAKE PLASTIC PIPE JOINTS.
   a. THE PIPE FITTINGS SHALL BE THOROUGHLY CLEANED OF DIRT, DUST, AND MOISTURE BEFORE APPLYING SOLVENT.

TESTING AND INSPECTION

1. ALL TESTS ON PRESSURE LINES SHALL BE COMPLETE PRIOR TO BACKFILLING; HOWEVER, SUFFICIENT BACKFILL MATERIAL MAY BE PLACED IN TRENCHES BETWEEN FITTINGS TO INSURE THE STABILITY OF THE LINE PRESSURE. IN ALL CASES, FITTINGS AND COUPLING MUST BE OPEN TO VISUAL INSPECTION FOR THE FULL PERIOD OF THE TEST.
2. PRESSURE MAINLINES SHALL BE TESTED UNDER 100 PSI PRESSURE FOR A PERIOD OF FOUR (4) HOURS AND PROVEN TIGHT.
   a. IF LEAKS OCCUR, THE JOINT OR JOINTS SHALL BE REPLACED AND THE TESTS REPEATED. DO NOT ALLOW OR CAUSE ANY OF THE WORK IN THIS SECTION TO BE COVERED UP OR ENCLOSED UNTIL IT HAS BEEN INSPECTED, TESTED AND APPROVED BY THE COUNTY INSPECTOR.
3. CLEAN, ADJUST AND BALANCE ALL SYSTEMS. VERIFY THAT REMOTE CONTROL VALVES ARE PROPERLY BALANCED, HEADS ARE PROPERLY ADJUSTED AND PROVIDE ADEQUATE COVERAGE FOR PLANTING AREAS AND THE INSTALLED SYSTEMS WORKABLE, CLEAN AND EFFICIENT.

NOTICE OF COMPLETION

THE COMPLETION OF THE CONTRACT WILL BE ACCEPTED AND THE NOTICE OF COMPLETION RECORDED ONLY WHEN THE ENTIRE CONTRACT IS COMPLETED SATISFACTORILY TO THE OWNER OR THE OWNER'S REPRESENTATIVE. PAYMENTS SHALL BE AS SPECIFIED IN THE CONTRACT.

GUARANTEE:

1. THE ENTIRE IRRIGATION SYSTEM INCLUDING ALL WORK DONE UNDER THIS CONTRACT, SHALL BE GUARANTEED AGAINST ALL DEFECTS IN MATERIALS OR WORKMANSHIP FOR THE SAME DURATION AS MANUFACTURER'S SPECIFIED GUARANTEE PERIOD.
2. AFTER THE SYSTEM HAS BEEN COMPLETED, THE CONTRACTOR SHALL INSTRUCT THE OWNER IN THE OPERATION AND MAINTENANCE OF THE SYSTEM AND SHALL FURNISH A COMPLETE SET OF OPERATING INSTRUCTIONS.
3. ANY SETTLING OF BACKFILLED TRENCHES WHICH MAY OCCUR DURING THE 6 MONTHS FOLLOWING THE FINAL ACCEPTANCE OF THE PROJECT SHALL BE REPAIRED TO THE OWNER'S SATISFACTION BY THE CONTRACTOR WITHOUT EXPENSE TO THE OWNER, INCLUDING THE COMPLETE RESTORATION OF ALL DAMAGED PLANTING, PAVING, OR OTHER IMPROVEMENTS OF ANY KIND.
4. ANY AND ALL DAMAGES TO RAIN WATER DRAINS, WATER SUPPLY LINES, GAS LINES AND OR OTHER SERVICE LINES SHALL BE REPAIRED AND MADE GOOD BY THE CONTRACTOR AT HIS EXPENSE.

MWELO CALCULATIONS

WATER EFFICIENT LANDSCAPE WORKSHEET P.1

Date: 9/7/2021
Project Name: FLEX WAREHOUSE
City: MADERA
County: MADERA
Construction Type: Non-Residential ETAF: 0.45
Water Source: Potable

Net Evapotranspiration For: Madera (inches per year)

Month	Jan	Feb	Mar	Apr	May	Jun	Jul	Aug	Sep	Oct	Nov	Dec	Total Annual Eto
Historic Eto	0.9	1.4	3.2	4.8	6.6	7.8	8.5	7.3	5.3	3.4	1.4	0.7	51.5
Eppt													0.0
Net Eto	**0.9**	**1.4**	**3.2**	**4.8**	**6.6**	**7.8**	**8.5**	**7.3**	**5.3**	**3.4**	**1.4**	**0.7**	**51.5**

Maximum Applied Water Allowance Calculation

MAWA=(Eto)(0.62) [(ETAFxLA) +(1-ETAFxSLA)]

Enter Total Landscaped Area

19,251	SF x	0.45	=	8,663

Enter Special Landscaped Area

	SF x	0.55	=	0

MAWA =	51.5	x	0.62	x	8663	=	**276,608**	gallons per year

WATER EFFICIENT LANDSCAPE WORKSHEET P.2

Date: 9/7/2021
Project Name: FLEX WAREHOUSE
City: MADERA
County: MADERA
Project Type: Non-Residential ETAF: 0.45
Water Source: Potable

Net Evapotranspiration For: Madera (inches per year)

Total Landscape Area: 19,251 SF
Reference Eto: 51.5

Estimated Total Water Use Calculation

ETWU=(Eto)(0.62)(ETAF)(AREA)

Regular Landscape Areas

Hydrozone / Valve / Description	Water Use	Plant Factor (PF)	Types of Irrigation (rotors, spray, drip, bubbler)	Irrigation Efficiency (IE)	ETAF (PF/IE)	Landscape Area (Sq. Ft.)	Estimated Total Water Use (ETWU)
Shrub-Low Drip	LW	0.3	Drip	0.81	0.37	17,573	207,609
Shrub-Med Drip	MW	0.5	Drip	0.81	0.62	1,090	21,578
Tree-Bubblers	MW	0.5	Bubblers	0.81	0.62	588	11,640
					Total Landscape Area=	**19,251**	
						ETWU Total:	240,827
						MAWA:	276,608

ESTIMATED WATER USAGE IS UNDER OR EQUAL TO MAWA. COMPLIANCE FOR WELO IS MET.

PLANTING SPECIFICATIONS

GENERAL NOTES

1. THE LANDSCAPE CONTRACTOR SHALL INSPECT THE SITE AND BE FAMILIAR WITH ALL EXISTING SITE CONDITIONS PRIOR TO SUBMITTING HIS BID.
2. CONTRACTOR SHALL BE RESPONSIBLE FOR MAKING HIMSELF FAMILIAR WITH ALL UNDERGROUND UTILITIES, PIPES, STRUCTURES AND OBSTRUCTIONS.
3. CONTRACTOR SHALL NOT WILLFULLY PROCEED WITH CONSTRUCTION AS SHOWN WHEN IT IS OBVIOUS THAT OBSTRUCTIONS IN LANDSCAPE AREA AND OR GRADE DIFFERENCES EXIST THAT MAY NOT HAVE BEEN KNOWN DURING THE DESIGN. SUCH CONDITIONS SHALL IMMEDIATELY BE BROUGHT TO THE ATTENTION OF THE OWNER AND/OR GENERAL CONTRACTOR. THE CONTRACTOR SHALL ASSUME FULL RESPONSIBILITY FOR ALL NECESSARY REVISIONS DUE TO FAILURE TO GIVE SUCH NOTIFICATION.
4. CONTRACTOR SHALL BE RESPONSIBLE FOR ANY COORDINATION WITH SUBCONTRACTORS AS REQUIRED TO ACCOMPLISH PLANTING OPERATIONS.
5. CONTRACTOR SHALL NOTIFY OWNER'S AUTHORIZED REPRESENTATIVE 48 HOURS PRIOR TO COMMENCEMENT OF WORK TO COORDINATE PROJECT OBSERVATION SCHEDULES
6. THE CONTRACTOR SHALL BE RESPONSIBLE FOR ANY DAMAGE TO EXISTING FACILITIES CAUSED BY OR DURING THE PERFORMANCE OF HIS WORK. ALL REPAIRS SHALL BE MADE AT NO COST TO THE OWNER.
7. PLANTING SHALL BE INSTALLED IN CONFORMANCE WITH ALL APPLICABLE LOCAL CODES AND ORDINANCES BY EXPERIENCED WORKMAN AND A LICENSED LANDSCAPE CONTRACTOR WHO SHALL OBTAIN ALL NECESSARY PERMITS AND PAY ALL REQUIRED FEES.
8. QUANTITIES SHOWN ARE ESTIMATE ONLY. THE LANDSCAPE CONTRACTOR SHALL BE RESPONSIBLE FOR THE INSTALLATION OF ALL MATERIAL APPEARING ON THE PLAN
   ALL PLANT MATERIAL SHALL BE APPROVED BY THE OWNER'S AUTHORIZED REPRESENTATIVE PRIOR TO INSTALLATION.
9. FINAL LOCATION OF ALL PLANT MATERIALS SHALL BE SUBJECT TO THE APPROVAL OF THE OWNER'S AUTHORIZED REPRESENTATIVE.
10. IF CONFLICTS ARISE BETWEEN SIZE OF AREAS AND PLANS, LANDSCAPE CONTRACTOR SHALL CONTACT THE OWNER AND/OR GENERAL CONTRACTOR FOR RESOLUTION. FAILURE TO MAKE SUCH CONFLICTS KNOWN WILL RESULT IN CONTRACTORS RESPONSIBILITY TO RELOCATE THE MATERIALS AT NO EXPENSE TO OWNER.
11. NO PLANTING SHALL BE DONE UNTIL INSTALLATION OF OVERHEAD IRRIGATION SYSTEM IS COMPLETED, FINAL GRADES HAVE BEEN ESTABLISHED, PLANTING AREAS HAVE BEEN PROPERLY GRADED AND SOIL PREPARED, AND THE WORK APPROVED BY LANDSCAPE CONTRACTOR.

SOIL PREPARATION

1. THE LANDSCAPE CONTRACTOR SHALL BE RESPONSIBLE FOR FINISH GRADING AND ALL PLANTING AREA DRAINAGE. POSITIVE DRAINAGE AWAY FROM THE BUILDING AS PER CITY CODES SHALL BE MAINTAINED. NO LOW SPOTS WITH STANDING WATER WILL BE ACCEPTED.
2. PRIOR TO PLANTING THE OF ANY MATERIAL, COMPACTED SOILS SHALL BE TRANSFORMED TO A FRIABLE CONDITION. ON ENGINEERED SLOPES, ONLY AMEND THE PLANTING HOLES NEEDED TO MEET THIS REQUIREMENT.
3. LANDSCAPE CONTRACTOR SHALL OBTAIN A SOILS REPORT WITH RECOMMENDATIONS ON AMENDMENTS ADEQUATE FOR PLANTING MATERIALS.
4. THE CONTRACTOR SHALL INCORPORATE BACKFILL SOIL MIXES IN PLANTING AREAS AS NOTED PER SOILS REPORT. WHERE ROTOTILLING IS NOT POSSIBLE INCORPORATE SOIL AMENDMENTS INTO TOP SIX INCHES WITH HAND TOOLS.
5. ALL ON-GRADE PLANTING AREAS SHALL BE CROSS RIPPED TO A DEPTH OF 6 INCHES IN TWO DIRECTIONS AND RECEIVE EARTHWISE SOIL AMENDMENT AT A RATE OF 4 CU YARDS PER THOUSAND SQUARE FEET (1,000 SF) OF AREA, AND FERTILIZE PER SOILS REPORT.
6. SOILS WITH GREATER THAN 6% ORGANIC MATTER IN TOP 6 INCHES ARE EXEMPT FROM ADDING COMPOST AND TILLING.

GRADING

1. SEE CIVIL PACKAGE FOR GRADING PLAN.
2. LANDSCAPE AREAS TO BE ROUGH GRADED PLUS OR MINUS A TENTH OF A FOOT BY OTHERS.
3. AFTER INSTALLATION OF IRRIGATION SYSTEM, ALL PLANTING AREAS ARE TO FINE GRADED TO WITHIN TWO INCHES OF CURB, WALK, HEADER, ETC. AND RAKED SMOOTH WITH ALL ROCKS AND DEBRIS OVER TWO INCH IN DIAMETER REMOVED.

TREE PLANTING

1. THE TREES ARE TO BE PLANTED AS SHOWN ON THE PLAN.
   a. TREES SHALL TYPICALLY BE LOCATED A MINIMUM OF 5 FEET FROM CURBS, WALKS AND OVERHEADS.
2. ROOT BARRIERS SHALL BE INSTALLED ON TREES WITHIN 5 FEET OF CURBS AND WALKS, ETC. ROOT BARRIERS TO BE 'DEEP-ROOT' ROOT BARRIER, OR APPROVED EQUAL. AS PER MANUFACTURER'S SPECIFICATIONS. SEE TREE PLANTING DETAIL.
3. ALL TREES SHALL RECEIVE FERTILIZER AT A RATE OF APPLICATION PER SOILS REPORT.
4. SEE DETAILS FOR STAKING METHOD, PLANT PIT DIMENSIONS AND BACKFILL REQUIREMENTS.
5. ALL EXISTING TREES TO REMAIN SHALL BE PROTECTED FROM DAMAGE DUE TO CONSTRUCTION. PROVIDE PROTECTIVE BARRIER THROUGHOUT CONSTRUCTION.
6. THE LANDSCAPE CONTRACTOR SHALL BE RESPONSIBLE FOR REPLACEMENT AND RECONDITIONING THE EXISTING LANDSCAPE DAMAGED BY THIS CONSTRUCTION CONTRACT. REPLACEMENT AND RECONDITIONING WILL INCLUDE BUT NOT BE NECESSARILY LIMITED TO: TURF ESTABLISHMENT (SOD/SEED), SOIL PREPARATION, SOIL CONDITIONING, FINE GRADING AND SEEDING); TREE, SHRUB, AND GROUND COVER REPLACEMENT, ETC.

SHRUB PLANTING

1. THE SHRUBS SHALL BE SPOTTED AS PER PLAN. SHRUB BACKFILL SHALL BE THE 'PIT PLANTING MIX' PER SOILS REPORT.
2. ALL SHRUBS SHALL RECEIVE FERTILIZER AT A RATE OF APPLICATION PER SOILS REPORT.
3. THE LANDSCAPE CONTRACTOR SHALL ASSUME ALL RESPONSIBILITY FOR THE SELECTION AND THE USE OF ALL CHEMICAL PRODUCTS.

GROUND COVER PLANTING

1. GROUND COVERS TO BE PLANTED TRIANGULARLY AND AT A SPACING AS NOTED ON THE PLANS.
   a. HOLD GROUND COVERS BACK 12 INCHES FROM EDGE OF HARDSCAPES AND THOROUGHLY WATER GROUND COVERS AFTER PLANTING.
2. ALL GROUND COVER SHALL EXTEND BENEATH TALLER PLANT MATERIAL.
3. WITHIN FOUR (4) DAYS AFTER COMPLETION OF PLANTING GROUND COVER A PRE-EMERGENT SHALL BE APPLIED AS PER MANUFACTURERS RECOMMENDATIONS.

MULCHING

1. PRIOR TO TOP DRESSING, USE PRE-EMERGENT HERBICIDE, 'RONSTAR' AT A RATE OF 5 LBS PER 1000 SQ. F.T.
2. A MINIMUM OF (3) INCH LAYER OF WALK ON BARK OR DARK DECK HUMUS MULCH SHALL BE APPLIED ON ALL EXPOSED PLANTING AREAS, EXCEPT IN TURF AREAS, CREEPING OR ROOTING GROUND COVERS, OR DIRECT SEEDING APPLICATIONS WHERE MULCH IS CONTRAINDICATED AND BE FREE OF NOXIOUS WEEDS AND FOREIGN MATERIALS.
3. PLANTING AREAS HAVING A SLOPE LESS THAN 2:1 SHALL BE APPLIED WITH A MINIMUM (3) INCH LAYER OF WALK ON BARK OR DARK DECK HUMUS MULCH AND BE FREE OF NOXIOUS WEEDS AND FOREIGN MATERIALS.
4. UP TO 5% OF THE LANDSCAPE AREA MAY BE LEFT WITHOUT MULCH FOR INSECT HABITAT, AND SUCH AREAS MUST BE NOTED ON PLANS,

TREE STAKING

1. ALL TREES DESIGNATED TO BE STAKED SHALL BE STAKED WITH A 10' LODGE POLE.
   a. DRIVE STAKES A MINIMUM OF 2FT INTO THE GROUND ON THE WINDWARD SIDE.
   b. TWO (2) TREE TIES SHALL BE FASTENED TO THE TREE AND STAKE BY LOOPING THE TIES IN FIGURE 8'S WITH THE INSIDE DIAMETER OF THE TIE AT 2 TO 3 TIMES THE DIAMETER OF THE TREE TRUNK. FASTEN TIE TO THE STAKE WITH ONE GALVANIZED NAIL.

TOPSOIL

1. IF PLANTING AREAS REQUIRE THE IMPORTING OF TOPSOIL, THE IMPORTED TOPSOIL SHALL BE CLEAN, SANDY LOAM; FREE OF NOXIOUS WEED SEED, STICKS, STONES OVER 1 INCH IN DIAMETER OR ANY MATERIAL THAT COULD INHIBIT GROWTH.
2. INCORPORATE IMPORTED TOPSOIL INTO THE TOP 6 TO 8 INCHES OF SITE SOIL BY ROTOTILLING OF HAND CULTIVATING AS NECESSARY.
3. SHALL BE FREE FROM HERBICIDES AND NOXIOUS WEEDS

PLANT ESTABLISHMENT PERIOD

1. MINIMUM OF 30 DAYS TO BE COMPLETED BEFORE THE LANDSCAPE CAN BE RECOMMENDED FOR ACCEPTANCE.

MAINTENANCE

1. THE CONTRACTOR SHALL MAINTAIN THE PROJECT FOR 90 DAYS OR AS REQUESTED BY THE OWNER.
   a. MAINTENANCE PERIOD CANNOT BEGIN UNTIL ESTABLISHMENT PERIOD IS COMPLETE AND ACCEPTED.
2. THE MAINTENANCE PERIOD TO BEGIN FOLLOWING THE APPROVAL OF INSTALLATION BY THE OWNER OR THE OWNERS REPRESENTATIVE.
3. THE MAINTENANCE TO INCLUDE BUT NOT LIMITED TO THE FOLLOWING; WATERING, CULTIVATING, WEEDING, MOWING, REPAIRS OF STAKES AND TIES, SPRAYING FOR INSECTS AND DISEASES.
4. AT THE END OF THE 90 DAY MAINTENANCE PERIOD ALL AREAS TO BE WEED FREE AND ALL PLANT MATERIAL TO BE IN A HEALTHY, THRIVING CONDITION.

GUARANTEE

1. ALL CONSTRUCTION, TREES AND SHRUBS BY THE LANDSCAPE CONTRACTOR AND/OR HIS SUBCONTRACTOR SHALL BE GUARANTEED FOR ONE YEAR AFTER BEGINNING OF MAINTENANCE PERIOD AND FINAL ACCEPTANCE.
2. THE CONTRACTOR SHALL REPLACE, AT NO EXPENSE TO THE OWNER, ANY AND ALL LANDSCAPE MATERIALS THAT ARE IN AN UNACCEPTABLE CONDITION FOR TIME OF USE, AND TREES OR SHRUBS THAT ARE DEAD.
3. REPLACEMENT SHALL OCCUR WITHIN TWO WEEKS OF NOTIFICATION OF ANY CONDITIONS.
4. REPLACEMENT SHALL BE OF THE SAME KIND AND SIZE AS THE ORIGINALLY SPECIFIED ITEM AND SHALL BE REPLACED AS ORIGINALLY DESCRIBED ON THE DRAWINGS.
5. THE CONTRACTOR SHALL NOT BE HELD LIABLE FOR LOSS OF PLANT MATERIAL DURING THE GUARANTEE PERIOD DUE TO VANDALISM, ACCIDENTAL CAUSES OR ACTS OF NEGLECT BY OTHERS THAN THE CONTRACTOR, HIS AGENTS AND EMPLOYEES.

CLEAN UP

1. AT THE END OF EACH WORK DAY, AT THE INSPECTION FOR SUBSTANTIAL COMPLETION AND BEFORE ACCEPTANCE OF PROJECT, CLEAN PAVED AREAS THAT ARE DIRTIED OR STAINED BY CONSTRUCTION OPERATIONS, BY SWEEPING OR WASHING, AND REMOVE DEFACEMENTS AND STAINS.
2. REMOVE CONSTRUCTION EQUIPMENT, EXCESS MATERIALS AND TOOLS.
3. HAUL FROM OWNER'S PROPERTY THE DEBRIS RESULTING FROM CONSTRUCTION AND DISPOSE OF LEGALLY.
4. REMOVE REMAINING TEMPORARY PROTECTION AT TIME OF ACCEPTANCE BY OWNER UNLESS OTHERWISE AGREED.

YEARLY LANDSCAPE MAINTENANCE PROGRAM

** OWNER IS TO PROVIDE AND FOLLOW YEARLY MAINTENANCE SCHEDULE FOR LANDSCAPE AND IRRIGATION FOR A MINIMUM OF 3 YEARS.*

ACTION	JAN.	FEB.	MAR.	APR.	MAY	JUNE	JULY	AUG.	SEPT.	OCT.	NOV.	DEC.
~~APPLY 15-15-15 FERTILIZER TO LAWN~~ N / A			☆			☆			☆			
APPLY 15-15-15 FERTILIZER TO FLOWER BEDS				☆								
APPLY PRE-EMERGENT WEED CONTROL, EVERYWHERE.		☆			☆				☆			
APPLY POST-EMERGENT WEED KILLER, AS NEEDED.			☆		☆		☆			☆		
APPLY INSECT SPRAY AS NEEDED.				☆		☆		☆				
APPLY CALCIUM NITRATE TO NON-DORMANT, LAWN AREAS.	☆										☆	

NOTE: DO NOT EXCEED MANUFACTURER'S APPLICATION RATES

WATER EFFICIENT LANDSCAPE WORKSHEET P.3

Date: 9/7/2021
Project Name: FLEX WAREHOUSE
City: MADERA
County: MADERA

IRRIGATION CONTROLLER SCHEDULE

Minutes per Run Time per Day (To Be Adjusted To Meet Jurisdiction Watering Restrictions

Watering Days:	3	*SEASON:*	(90) day Establishment Period / Summer											
Station	**Irrigation Type**	**No. of Run Times**	**Jan**	**Feb**	**Mar**	**Apr**	**May**	**Jun**	**Jul**	**Aug**	**Sep**	**Oct**	**Nov**	**Dec**
Shrub-Low Drip	Drip	2	5	7	16	25	34	40	44	38	27	17	7	4
Shrub-Med Drip	Drip	2	8	12	27	41	57	67	73	63	45	29	12	6
Tree-Bubblers	Bubblers	2	6	9	20	30	41	48	52	45	33	21	9	4

2019CBC
City of Madera
Building Department
This approval of these plans does not prevent the City of Madera from requiring correction of errors or omissions in the plans, specifications or construction. Subject to field inspections and approvals of all trades and disciplines.
APPROVED
By:
Date: MAR 03 2022

I HAVE COMPLIED WITH THE CRITERIA OF THE WATER EFFICIENT LANDSCAPE REQUIREMENTS ORDINANCE AND APPLIED THEM FOR THE EFFICIENT USE OF WATER IN THE IRRI

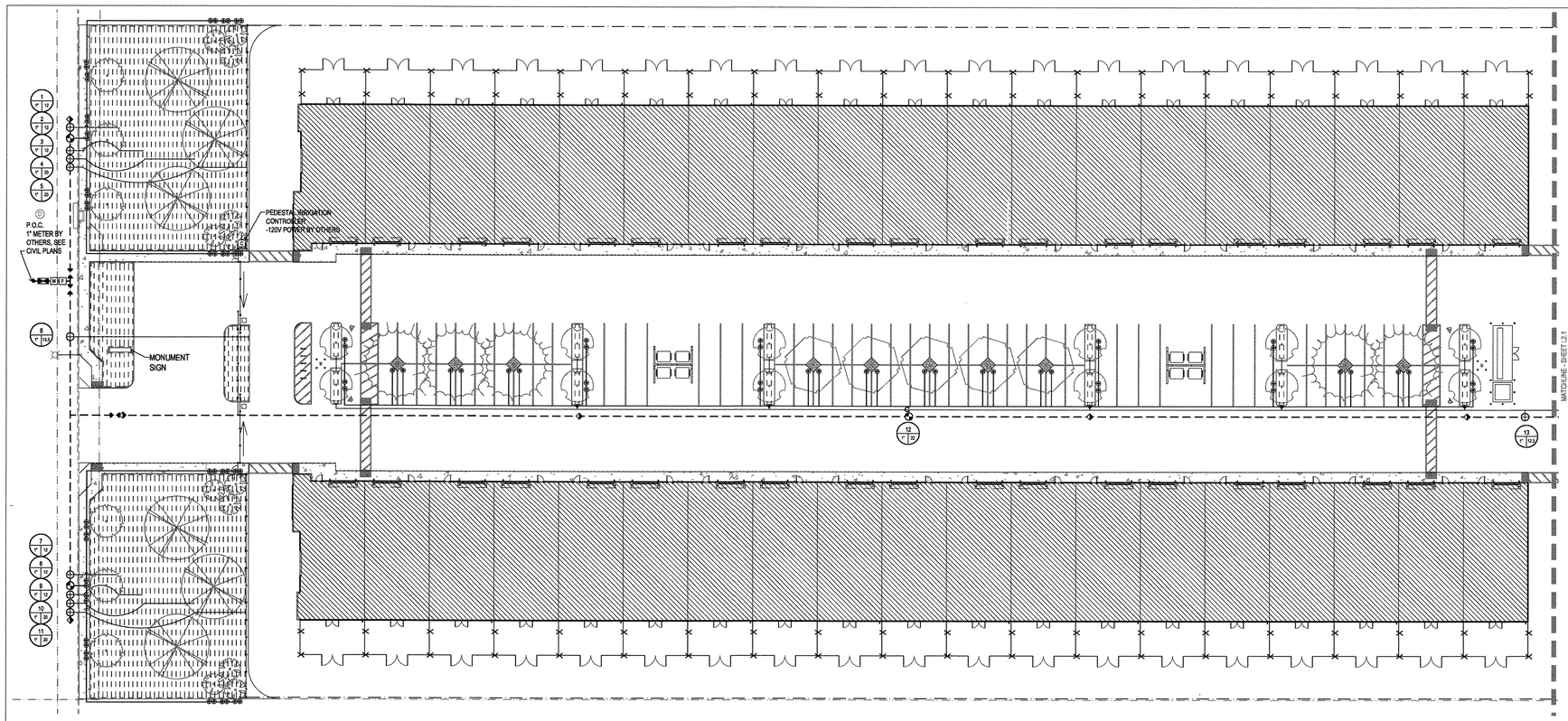

IRRIGATION LEGEND

SYM.	MFR.	DESCRIPTION	MODEL	RATE	NOTES
	WILKINS	REDUCED PRESSURE BACKFLOW PREVENTER	1", 825Y		
	HUNTER	3/4" QUICK COUPLER	HQ-33RC		
	MATCO	BRASS / BRONZE SHUTOFF	LINE SIZE		
C	HUNTER	I-CORE OUTDOOR PEDESTAL IRRIGATION CONTROLLER , 6 STA W/ SOLAR SYNC	IC600M W/ (2) ICM-600, ACC-PED & WSS-SEN		
F	HUNTER	1.5" FLOW SENSOR	HFS W/ FTC-150		
M	HUNTER	1.5" MASTER VALVE	ICV-151G		
	HUNTER	PGV REMOTE CONTROL IRRIGATION VALVE	0-20 GPM = 1" : PGV-101G 20 - 40 GPM = ; 1.5": PGV-151G		
	HUNTER	DRIP ZONE REMOTE CONTROL IRRIGATION VALVE	1": ICV101G W/ HY-100		
	HUNTER	MULTISTREAN BUBBLER NOZZLE W/ 6" POP-UP W/ CHECK VALVE	MSBN-50Q/H PROS-06-CV	.50 GPM	
	HUNTER	HLD DRIPLINE	HLD-09-12; SPC @ 12"-24" O.C. BURY DRIPLINE 2" UNDER FINISH GRADE. LIGHTLY COMPACT TOP SOIL BEFORE INSTALLING TOP DRESS	0.9 GPH	
	HUNTER	DRIP AIR RELIEF VALVE			
	HUNTER	DRIP FLUSH VALVE			
		MAINLINE	SCH 40 PVC (2") MIN. UNLESS OTHERWISE NOTED		
		LATERALS	CL200 PVC (3/4") MIN. UNLESS OTHERWISE NOTED		
(NOT SHOWN)		SLEEVING	SCH 40 PVC , MIN SIZE 2X PIPE DIA		

X-X — CONTROLLER & VALVE ID
0 — GALLONS PER MINUTE
0 — VALVE SIZE

NOTES:

DESIGN STATIC PRESSURE AT POINT OF CONNECTION - 45 PSI
*IF UPON COMPLETION OF MAINLINE PSI TEST PSI IS BELOW 45 PSI CONTACT RIVERSIDE LANDSCAPE. DO NOT PROCEED WITH INSTALLATION OF IRRIGATION SYSTEM IF PRESSURE TEST DOES NOT YIELD THE MINIMUM REQUIREMENTS AS SPECIFIED ON THE PLANS.

PIPING IS SHOWN DIAGRAMMATICALLY FOR DRAWING CLARITY. PLACE ALL LATERALS 24" BEHIND ALL CURBS AND WALK.

ALL SPRAY HEADS TO BE PLACED MIN 24" FROM BACK OF CURB, SIDEWALK OR ANY NON-PERMEABLE SURFACE IN PUBLIC ACCESS AREAS.

2019CBC
City of Madera
Building Department
The approval of these plans does not prevent the City of Madera from requiring correction of errors or omissions in the plans. Subject to field inspections and approval during construction. Comply with all Codes and Ordinances in force.
APPROVED
By:
Date: MAR 03 2022

I HAVE COMPLIED WITH THE CRITERIA OF THE WATER EFFICIENT LANDSCAPE REQUIREMENTS ORDINANCE AND APPLIED THEM FOR THE EFFICIENT USE OF WATER IN THE IRRIGATION DESIGN AND PLANTING DESIGN PLAN

SIGNATURE LIC NO DATE

Riverside Landscape Maintenance, Inc.

SCALE: 1"=30'
30' 0 30'

NORTH

UNDERGROUND SERVICE ALERT of Northern California
Call: TOLL FREE 1-800-227-2600
TWO WORKING DAYS BEFORE YOU DIG

DBKO DESIGN - BUILD

WHSE PARTNERS

BY	REVISION	DATE

ANY INFORMATION OR DATA ON THIS DRAWING IS NOT INTENDED TO BE SUITABLE FOR REUSE BY ANY PERSON, FIRM, CORPORATION, OR ANY OTHER ON EXTENSIONS OF THIS PROJECT OR FOR ANY USE ON OTHER PROJECTS. ANY REUSE WITHOUT WRITTEN VERIFICATION OR ADAPTATION BY THE ENGINEER FOR THE SPECIFIC PURPOSE INTENDED WILL BE AT THE USER'S SOLE RISK AND WITHOUT LIABILITY OR LEGAL EXPOSURE TO THE ENGINEER.

SEAL

LICENSED LANDSCAPE ARCHITECT
MICHAEL BERNARD ENTERRIOS
CERTIFICATE NO. 4415
15 DEC 2021
DATE
STATE OF CALIFORNIA

IRRIGATION PLAN

LEASE FLEX. / WAREHOUSE BUILDINGS
FOR
MADERA INDUSTRIAL WHSE, LLC
S. SCHNOOR AVENUE, MADERA, CA

JOB NUMBER	21107
DESIGNED BY	MH
DRAWN BY	EZ
DATE	12/14/21
SHEET NUMBER	L2.0

G:\Shared drives\DBKOrdinary\PROJECTS\20106_WHSE Partners Fresno, CA\Plans, Calcs & Specs\Arch-Shell (DBKO)\Drawings\Fresno Property - Madera\20106_WP - Fresno-Madera_2021-08-04.rvt 8/16/2021 11:49:59 AM

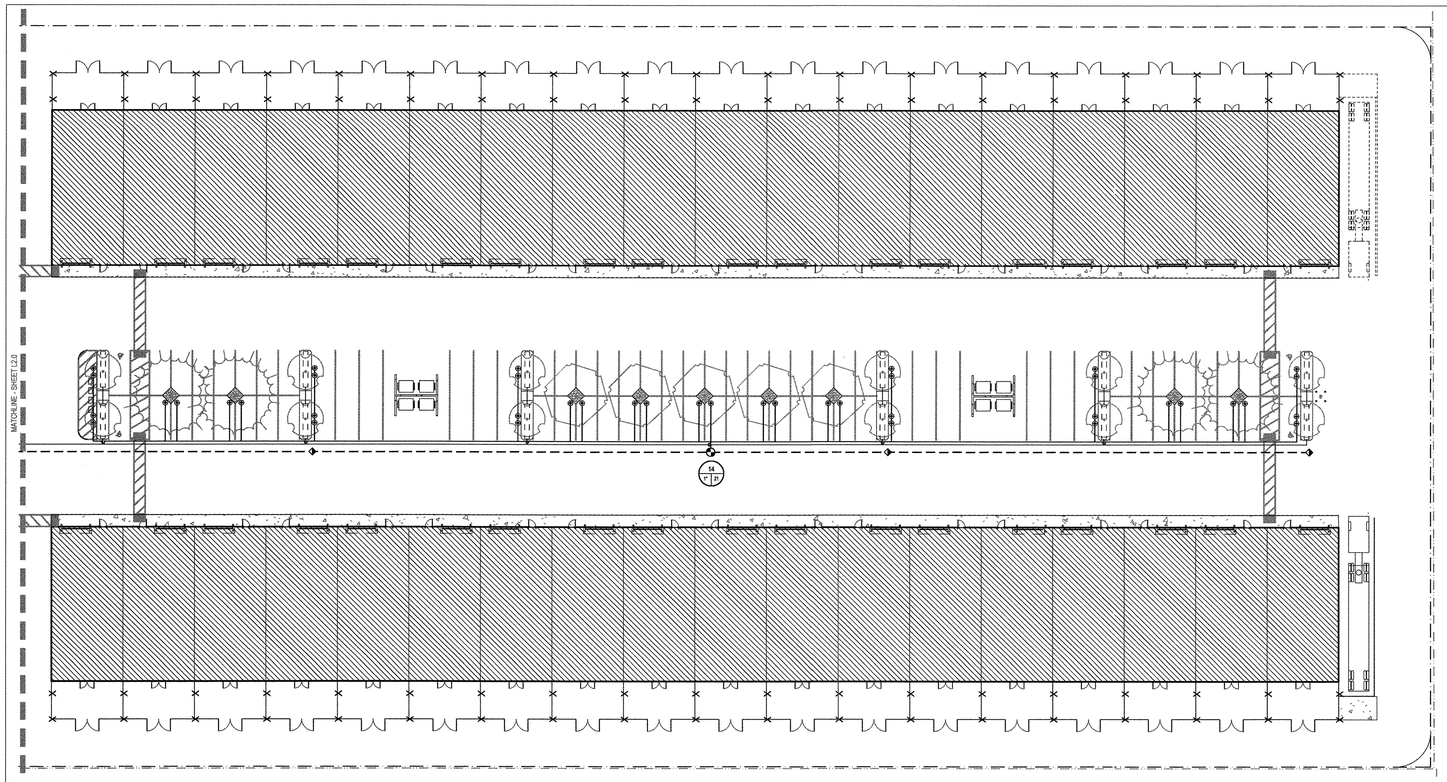

IRRIGATION LEGEND

SYM.	MFR.	DESCRIPTION	MODEL	RATE	NOTES
	WILKINS	REDUCED PRESSURE BACKFLOW PREVENTER	1", 825Y		
	HUNTER	3/4" QUICK COUPLER	HQ-33RC		
	MATCO	BRASS / BRONZE SHUTOFF	LINE SIZE		
C	HUNTER	I-CORE OUTDOOR PEDESTAL IRRIGATION CONTROLLER , 6 STA W/ SOLAR SYNC	IC600M W/ (2) ICM-600, ACC-PED & WSS-SEN		
F	HUNTER	1.5" FLOW SENSOR	HFS W/ FTC-150		
M	HUNTER	1.5" MASTER VALVE	ICV-151G		
	HUNTER	PGV REMOTE CONTROL IRRIGATION VALVE	0-20 GPM = 1" : PGV-101G 20 - 40 GPM = ; 1.5": PGV-151G		
	HUNTER	DRIP ZONE REMOTE CONTROL IRRIGATION VALVE	1": ICV101G W/ HY-100		
	HUNTER	MULTISTREAN BUBBLER NOZZLE W/ 6" POP-UP W/ CHECK VALVE	MSBN-50Q/H PROS-06-CV	.50 GPM	
	HUNTER	HLD DRIPLINE	HLD-09-12; SPC @ 12"-24" O.C. BURY DRIPLINE 2" UNDER FINISH GRADE. LIGHTLY COMPACT TOP SOIL BEFORE INSTALLING TOP DRESS	0.9 GPH	
	HUNTER	DRIP AIR RELIEF VALVE			
	HUNTER	DRIP FLUSH VALVE			
		MAINLINE	SCH 40 PVC (2") MIN. UNLESS OTHERWISE NOTED		
		LATERALS	CL200 PVC (3/4") MIN. UNLESS OTHERWISE NOTED		
(NOT SHOWN)		SLEEVING	SCH 40 PVC , MIN SIZE 2X PIPE DIA		

X-X ← CONTROLLER & VALVE ID
0 | 0 ← GALLONS PER MINUTE
↑ VALVE SIZE

NOTES:

DESIGN STATIC PRESSURE AT POINT OF CONNECTION - 45 PSI
*IF UPON COMPLETION OF MAINLINE PSI TEST PSI IS BELOW 45 PSI CONTACT RIVERSIDE LANDSCAPE. DO NOT PROCEED WITH INSTALLATION OF IRRIGATION SYSTEM IF PRESSURE TEST DOES NOT YIELD THE MINIMUM REQUIREMENTS AS SPECIFIED ON THE PLANS.

PIPING IS SHOWN DIAGRAMMATICALLY FOR DRAWING CLARITY. PLACE ALL LATERALS 24" BEHIND ALL CURBS AND WALK.

ALL SPRAY HEADS TO BE PLACED MIN 24" FROM BACK OF CURB, SIDEWALK OR ANY NON-PERMEABLE SURFACE IN PUBLIC ACCESS AREAS.

2019CBC
City of Madera
Building Department
The approval of these plans does not be interpreted to be a waiver of the requirements of the Codes or approval of errors or omissions in the plans. Shall comply with all requirements of the Codes in effect at the time of construction. Subject to field inspection and approval. Plans must be kept on the job site at all times.
APPROVED
By:
Date: MAR 03 2022

I HAVE COMPLIED WITH THE CRITERIA OF THE WATER EFFICIENT LANDSCAPE REQUIREMENTS ORDINANCE AND APPLIED THEM FOR THE EFFICIENT USE OF WATER IN THE IRRIGATION DESIGN AND PLANTING DESIGN PLAN

SIGNATURE LIC NO DATE

Riverside Landscape & Nursery Supplies, Inc.

SCALE: 1"=30'
30' 0 30'

NORTH

UNDERGROUND SERVICE ALERT of Northern California
Call: TOLL FREE 1-800-227-2600
TWO WORKING DAYS BEFORE YOU DIG

DBKO DESIGN-BUILD

WHSE PARTNERS

BY	REVISION	DATE

ANY INFORMATION OR DATA ON THIS DRAWING IS NOT INTENDED TO BE SUITABLE FOR REUSE BY ANY PERSON, FIRM, CORPORATION OR ANY OTHER ENTITY FOR ANY PURPOSE OTHER THAN THE SPECIFIC PROJECT FOR WHICH IT WAS PREPARED AND PUBLISHED. ANY USE ON ANY OTHER PROJECT, WITHOUT WRITTEN VERIFICATION OR ADAPTATION BY THE ENGINEER FOR THE SPECIFIC PURPOSE INTENDED WILL BE AT THE USER'S SOLE RISK AND WITHOUT LIABILITY OR LEGAL EXPOSURE TO THE ENGINEER.

SEAL

LICENSED LANDSCAPE ARCHITECT
MICHAEL HANS BRUNNER
LICENSE NO. 4416
15 DEC 2021
STATE OF CALIFORNIA

IRRIGATION PLAN

LEASE FLEX. / WAREHOUSE BUILDINGS
FOR
MADERA INDUSTRIAL WHSE, LLC
S. SCHNOOR AVENUE, MADERA, CA

JOB NUMBER	21107
DESIGNED BY	MH
DRAWN BY	EZ
DATE	12/14/21
SHEET NUMBER	L2.1

G:\Shared drives\DBKO\Company\PROJECTS\20106_WHSE Partners-Fresno, CA\Plans, Cals & Specs\Arch-Struct (DBKO)\Drawings\Fresno Property - Master\20106_WP - Fresno-Madera_2021-08-04.rvt 8/16/2021 11:48:50 AM

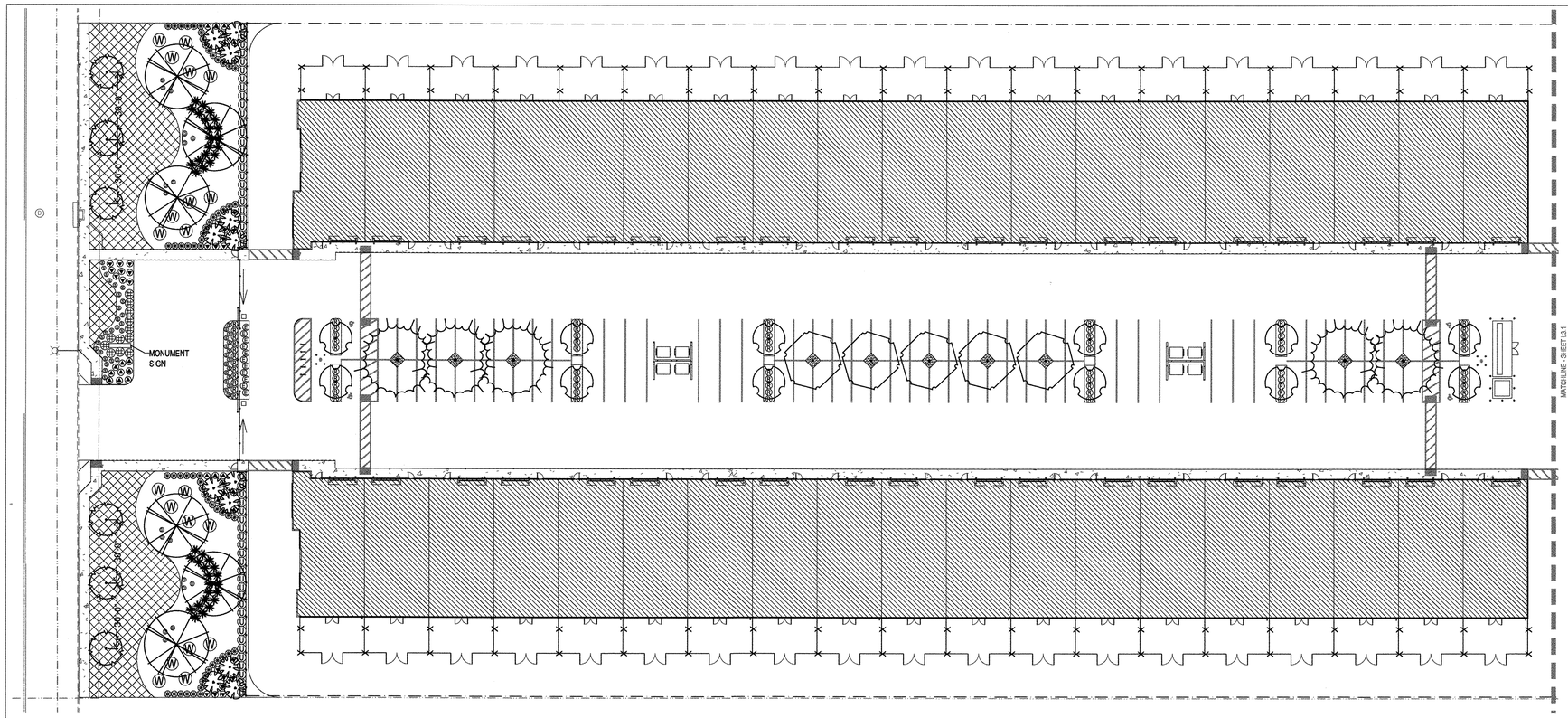

PLANTING LEGEND

SYM.	BOTANICAL NAME	COMMON NAME	SIZE	WTR USE / QTY	SPC
TREE					
	CERCIS C. 'OKLAHOMA'	OKLAHOMA RED BUD	15 GAL	MED 6	
	LAGERSTROEMIA I. 'DYNAMITE'	DYNAMITE RED CRAPE MYRTLE	15 GAL	LOW 24	
	LAGERSTROEMIA I. 'DYNAMITE'	DYNAMITE RED CRAPE MYRTLE MULTI-TRUNK TREE	15 GAL	LOW 13	
	PISTACIA CHINENSIS	CHINESE PISTACHE	15 GAL	LOW 10	
	QUERCUS VIRGINIANA	SOUTHERN LIVE OAK	15 GAL	MED 6	
	ULMUS PARVIFOLIA	CHINESE ELM	15 GAL	MED 9	
SHRUBS					
D	DIANELLA REVOLUTA 'LITTLE REV'	LITTLE REV FLAX LILY	5 GAL	LOW 18	
E	EUONYMUS JAPONICUS 'GREEN SPIRE'	GREEN SPIRE EUONYMUS	5 GAL	LOW 11	
	MUHLENBERGIA CAPILLARIS	PINK MUHLY GRASS	1 GAL	LOW 40	
	MYOPORUM PARVIFOLIUM	TRAILING MYOPORUM	1 GAL	LOW 459	@ 4' O.C.
O	OLEA EUROPAEA 'MONTRA'	LITTLE OLLIE DWARF OLIVE	5 GAL	LOW 60	
R	RHAPHIOLEPIS INDICA 'BALLERINA'	BALLERINA INDIAN HAWTHORNE	5 GAL	MED 132	
J	RHAPHIOLEPIS UMBELLATA	YEDDO INDIAN HAWTHORNE	5 GAL	LOW 52	
A	ROSA X. 'NOARE'	RED CARPET ROSE	2 GAL	MED 50	
I	ROSE 'ICEBERG'	ICEBERG ROSE	5 GAL	MED 12	
S	TULBAGHIA VIOLACEA	SOCIETY GARLIC	1 GAL	LOW 43	
W	WESTRINGIA FRUTICOSA	COAST ROSEMARY	5 GAL	LOW 20	
OTHER					
	DECOMPOSED GRANITE , 2" THICK, 475 SF				

NOTES
1. SEE CIVIL PLANS FOR UTILITY AND GRADING PLAN
2. TOTAL LANDSCAPE AREAS: 19,251 SF

SHADE CALCULATIONS

962 SF — 30FT + DIAM.

% OF SHADE	QTY
FULL	9
HALF	0
QTR	0
TOTAL	9
ULMUS	9
TOTAL	9

707 SF — 20 - 30 FT DIAM.

% OF SHADE	QTY
FULL	10
HALF	0
QTR	
TOTAL	10
PIS	10
TOTAL	10

314 SF — 15 - 20 FT DIAM.

% OF SHADE	QTY
FULL	26
HALF	0
QTR	
TOTAL	26
LAG	26
TOTAL	26

Shade Calculations

Parking Stall Area:				41,408	sf
50% Shade Requirement:				20,704	sf
A) Building Shade Area:				-	sf
1) Large Trees (30' + Dia.)					
Qty		Tree Area			
9	@	962	=	8,658	sf
0	@	481	=	-	sf
0	@	241	=	-	sf
2) Medium Tree (20'-30' Dia.)					
Qty		Tree Area			
10	@	707	=	7,070	sf
0	@	354	=	-	sf
0	@	177	=	-	sf
3) Small Tree (15'-20' Dia.)					
Qty		Tree Area			
26	@	314	=	8,164	sf
0	@	157	=	-	sf
0	@	79	=	-	sf
Total Shade Tree Qty: 45				23,892	sf :Total Shade Provided

58% of parking lot is shaded MORE than the required 50%

VEGETATION COVERAGE CALCULATIONS

Total Landscape Area: 19,251 sf
75% Vegetaion Coverage Requirement: 14,438 sf

Shrub Sizes At Mature Growth

Dia (ft)	Area (sf)	Qty	Total Area (sf)	
1	0.79	-	-	sf
2	3.14	61	192	sf
3	7.07	253	1,788	sf
4	12.57	104	1,307	sf
5	19.63	-	-	sf
6	28.27	459	12,978	sf
7	38.48	-	-	sf
8	50.27	-	-	sf
9	63.62	-	-	sf
10	78.54	-	-	sf
			16,265	sf : Total Coverage Provided

84% of landscape areas covered in vegitation is MORE than the required 75%

2019CBC
City of Madera
Building Department
This approval of these plans does not prevent the City of Madera from requiring correction of errors or omissions in the plans, specifications or construction. Subject to field inspection, approvals and compliance with Codes and Ordinances.
APPROVED
By:
Date: MAR 03 2022

I HAVE COMPLIED WITH THE CRITERIA OF THE WATER EFFICIENT LANDSCAPE REQUIREMENTS ORDINANCE AND APPLIED THEM FOR THE EFFICIENT USE OF WATER IN THE IRRIGATION DESIGN AND PLANTING DESIGN PLAN

SIGNATURE LIC NO DATE

Riverside Landscape & Nursery Services, Inc.

SCALE: 1"=30'
30' 0 30'

NORTH

UNDERGROUND SERVICE ALERT of Northern California
Call: TOLL FREE 1-800-227-2600
TWO WORKING DAYS BEFORE YOU DIG

DBKO DESIGN - BUILD

WHSE PARTNERS

DATE	REVISION	BY

SEAL

LICENSED LANDSCAPE ARCHITECT — MICHAEL HOWARD BARNES — LICENSE NO. 4415 — EXPIRATION DATE 31 DECEMBER 2021 — 15 DEC 2021 — STATE OF CALIFORNIA

ANY INFORMATION OR DATA ON THIS DRAWING IS NOT INTENDED TO BE SUITABLE FOR REUSE BY ANY PERSON, FIRM, CORPORATION, OR ANY OTHER ON EXTENSIONS OF THIS PROJECT OR FOR ANY USE ON ANOTHER PROJECT, AND ANY REUSE WITHOUT WRITTEN VERIFICATION OR ADAPTATION BY THE ENGINEER FOR THE SPECIFIC PURPOSE INTENDED WILL BE AT THE USER'S SOLE RISK AND WITHOUT LIABILITY OR LEGAL EXPOSURE TO THE ENGINEER.

PLANTING PLAN

LEASE FLEX. / WAREHOUSE BUILDINGS
FOR
MADERA INDUSTRIAL WHSE, LLC
S. SCHNOOR AVENUE, MADERA, CA

JOB NUMBER	21107
DESIGNED BY	MH
DRAWN BY	EZ
DATE	12/14/21
SHEET NUMBER	L3.0

© Shared drives/DBKOcompany/PROJECTS/21108_WHSE Partners Fresno, CA/Plans, Calcs & Specs/Arch-Struct (DBKO)/Drawings/Franco Property - Madera/21108_WP - Franco Madera_2021-08-04.rvt 8/16/2021 11:46:50 AM

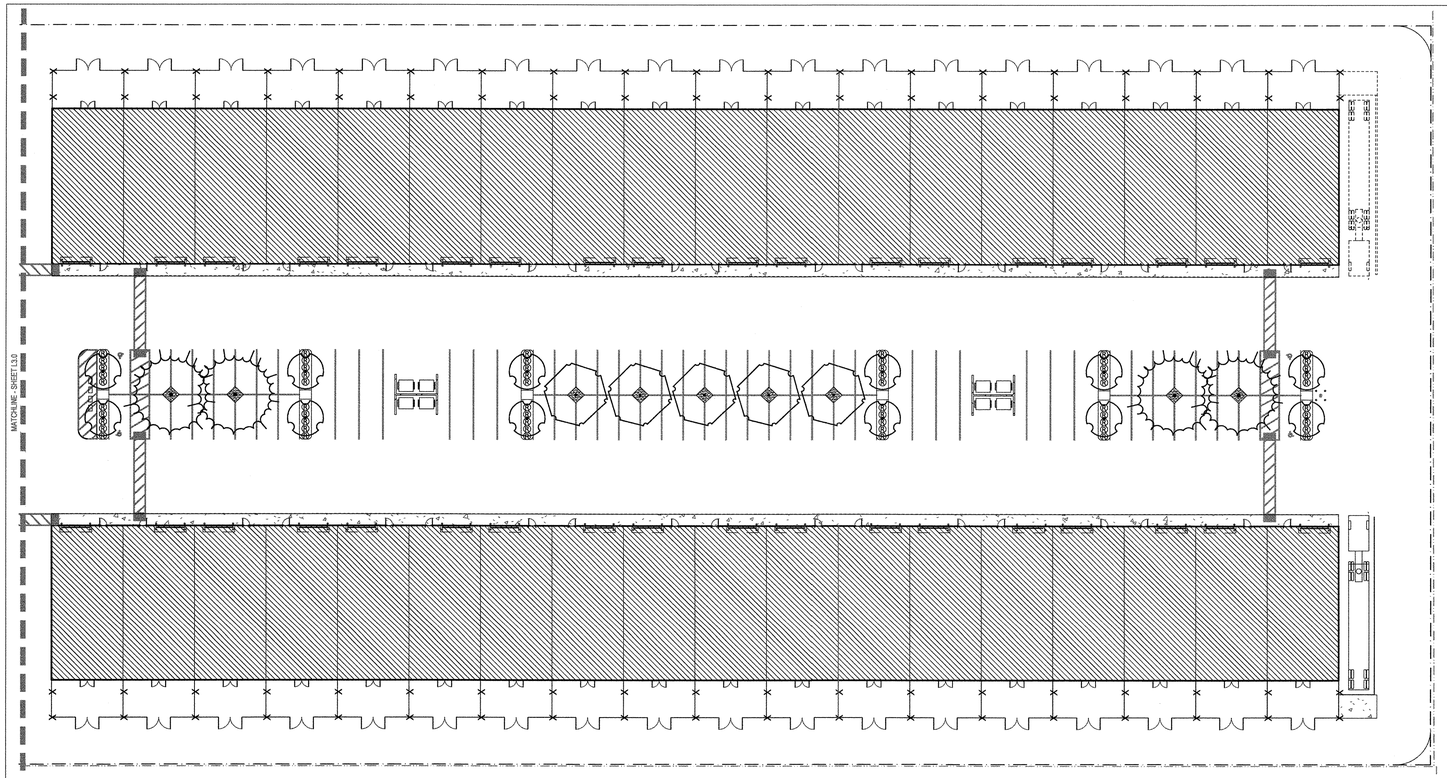

PLANTING LEGEND

SYM.	BOTANICAL NAME	COMMON NAME	SIZE	WTR USE / QTY	SPC
TREE					
	CERCIS C. 'OKLAHOMA'	OKLAHOMA RED BUD	15 GAL	MED 6	
	LAGERSTROEMIA I. 'DYNAMITE'	DYNAMITE RED CRAPE MYRTLE	15 GAL	LOW 24	
	LAGERSTROEMIA I. 'DYNAMITE'	DYNAMITE RED CRAPE MYRTLE MULTI-TRUNK TREE	15 GAL	LOW 13	
	PISTACIA CHINENSIS	CHINESE PISTACHE	15 GAL	LOW 10	
	QUERCUS VIRGINIANA	SOUTHERN LIVE OAK	15 GAL	MED 6	
	ULMUS PARVIFOLIA	CHINESE ELM	15 GAL	MED 9	
SHRUBS					
D	DIANELLA REVOLUTA 'LITTLE REV'	LITTLE REV FLAX LILY	5 GAL	LOW 18	
E	EUONYMUS JAPONICUS 'GREEN SPIRE'	GREEN SPIRE EUONYMUS	5 GAL	LOW 11	
	MUHLENBERGIA CAPILLARIS	PINK MUHLY GRASS	1 GAL	LOW 40	
	MYOPORUM PARVIFOLIUM	TRAILING MYOPORUM	1 GAL	LOW 459	@ 4' O.C.
	OLEA EUROPAEA 'MONTRA'	LITTLE OLLIE DWARF OLIVE	5 GAL	LOW 60	
R	RHAPHIOLEPIS INDICA 'BALLERINA'	BALLERINA INDIAN HAWTHORNE	5 GAL	MED 132	
U	RHAPHIOLEPIS UMBELLATA	YEDDO INDIAN HAWTHORNE	5 GAL	LOW 52	
	ROSA X. 'NOARE'	RED CARPET ROSE	2 GAL	MED 50	
	ROSE 'ICEBERG'	ICEBERG ROSE	5 GAL	MED 12	
S	TULBAGHIA VIOLACEA	SOCIETY GARLIC	1 GAL	LOW 43	
W	WESTRINGIA FRUTICOSA	COAST ROSEMARY	5 GAL	LOW 20	
OTHER					
	DECOMPOSED GRANITE , 2" THICK, 475 SF				

NOTES
1. SEE CIVIL PLANS FOR UTILITY AND GRADING PLAN
2. TOTAL LANDSCAPE AREAS: 19,251 SF

2019CBC
City of Madera
Building Department
The approval of these plans does not prevent the City of Madera from requiring correction of errors or omissions in the plans, specifications or construction subject to inspection, assessments and approval under Codes and Ordinances.
APPROVED
By:
Date: MAR 03 2022

I HAVE COMPLIED WITH THE CRITERIA OF THE WATER EFFICIENT LANDSCAPE REQUIREMENTS ORDINANCE AND APPLIED THEM FOR THE EFFICIENT USE OF WATER IN THE IRRIGATION DESIGN AND PLANTING DESIGN PLAN

SIGNATURE LIC NO DATE

Riverside Landscape & Nursery Supplies, Inc.

SCALE: 1"=30'
30' 0 30'

NORTH

UNDERGROUND SERVICE ALERT of Northern California
Call: TOLL FREE 1-800-227-2600
TWO WORKING DAYS BEFORE YOU DIG

DBKO DESIGN-BUILD

WHSE PARTNERS

DATE	REVISION	BY

ANY INFORMATION OR DATA ON THIS DRAWING IS NOT INTENDED TO BE SUITABLE FOR REUSE BY ANY PERSON, FIRM, CORPORATION OR ANY OTHER ENTERPRISE FOR ANY OTHER PURPOSE OR USE ON ANY OTHER PROJECT, OR ANY OTHER VERSION OF THIS PROJECT FOR ANY USE ON THIS PROJECT BY ANY PERSON OTHER THAN THE ENGINEER FOR THE SPECIFIC PURPOSE INTENDED WILL BE AT THE USER'S SOLE RISK AND WITHOUT LIABILITY OR LEGAL EXPOSURE TO THE ENGINEER.

SEAL

LICENSED LANDSCAPE ARCHITECT
MICHAEL BENNETT
LICENSE
LICENSE NO. 4415
15 DEC 2021
DATE
STATE OF CALIFORNIA

PLANTING PLAN

LEASE FLEX. / WAREHOUSE BUILDINGS FOR MADERA INDUSTRIAL WHSE, LLC

S. SCHNOOR AVENUE, MADERA, CA

JOB NUMBER	21107
DESIGNED BY	MH
DRAWN BY	EZ
DATE	12/14/21
SHEET NUMBER	L3.1

G:\Shared drives\DBKO\Projects\PROJECTS\21106_WHSE Partners Fresno, CA\Plans, Calcs & Specs\Arch-Struct (DBKO)\Drawings\Fresno Property - Madera\21106 -WP - Fresno-Madera_2021-08-04.rvt 8/16/2021 11:48:50 AM

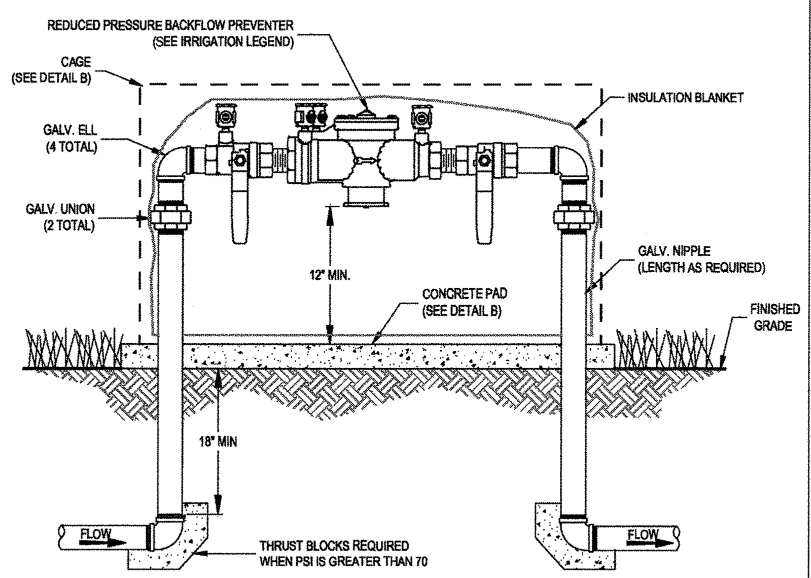

NOTE:
1. INSTALL PER MFR. SPECIFICATIONS.
2. PROVIDE INSULATION BLANKET FOR FREEZE PROTECTION

(A) BACKFLOW PREVENTER W/ CAGE, TYP.

SCALE: NTS

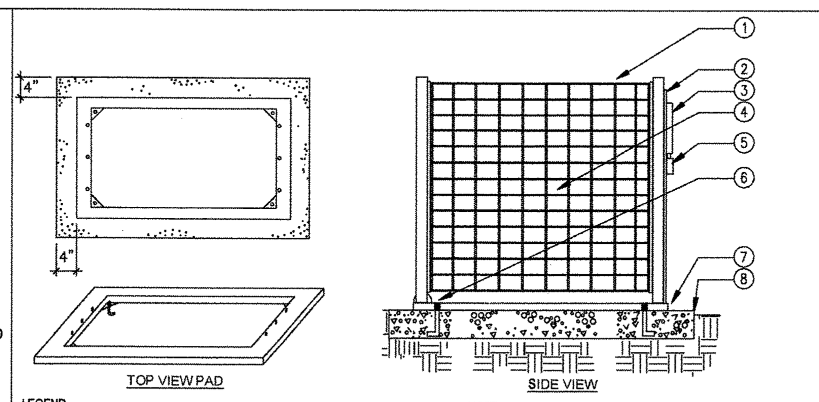

LEGEND
1. STRONGBOX SMOOTH TOUCH BACKFLOW CAGE AS SPECIFIED PER SIZE OR APPROVED EQUAL.
2. ENCLOSURE LOCKING SWING DOOR (DOOR MOUNTED TO ANCHOR BASE)
3. PADLOCK PROTECTIVE COVER.
4. BACKFLOW PREVENTER.
5. PADLOCK.
6. ENCLOSURE SWIVEL POINT ATTACHED TO MOUNTING BASE. ENCLOSURE SECURED TO BASE (6 PLACES)
7. ANCHOR BASE MOUNT.
8. POURED CONCRETE BASE, (SEE DETAIL A)

NOTE:
A. SMOOTH TOUCH ANCHOR BASE OR POURED IN PLACE CONCRETE PAD.
B. MOUNTING BASE SECURED IN CONCRETE WITH ⅜" J BOLTS (4 PLACES).
C. EXISTING CONCRETE CORNERS WILL NEED TO ⅜"X 3" REDHEAD ANCHORS.

(B) BACKFLOW PREVENTER CAGE & PAD

SCALE: NTS

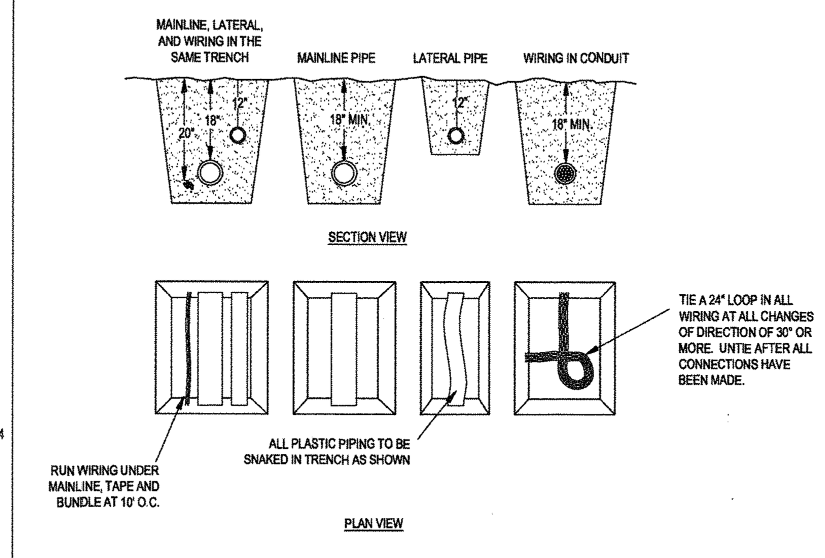

NOTE:
1. SLEEVE BELOW ALL HARDSCAPE ELEMENTS WITH SCHEDULE 40 PVC 2 TIMES THE DIAMETER OF THE PIPE WITHIN.

(C) TRENCHING DETAIL

SCALE: NTS

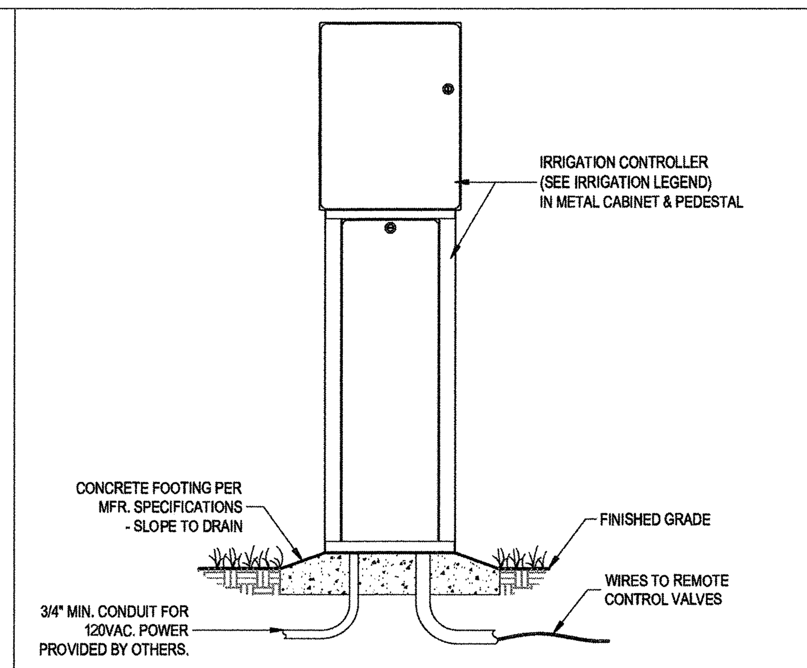

(D) PEDESTAL IRRIGATION CONTROLLER

SCALE: NTS

1. MODEL: WIRELESS SOLAR SYNC SENSOR, MOUNT UP TO 800' FROM RECEIVER
2. SUITABLE POST, POLE, OR GUTTER MOUNT. MOUNT IN LOCATION WHERE SENSOR CAN RECEIVE FULL SUN, IS OPEN TO RAINFALL AND OUT OF SPRINKLER SPRAY PATTERN
3. WIRELESS SOLAR SYNC RECEIVER MOUNTED ON THE WALL NEXT TO THE CONTROLLER
4. IRRIGATION CONTROLLER - SEE LEGEND
5. VALVE CONTROL WIRE CONDUIT
6. POWER SOURCE

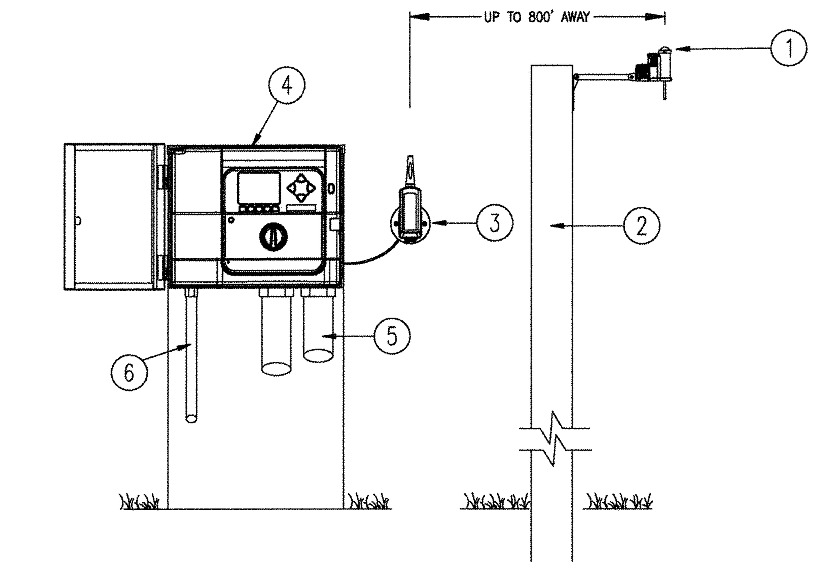

(E) HUNTER WIRELESS SOLAR SYNC

SCALE: NTS

1. STANDARD VALVE BOX w/ LID & EXTENSIONS AS NEEDED: NDS OR EQUAL
2. PVC BALL VALVE OR GATE VALVE : (SEE IRRIGATION LEGEND)
3. FINISHED GRADE: INSTALL 1/2" ABOVE FINISHED GRADE IN TURF AREAS, OR 2" IN SHRUB AREAS
4. COUPLING OR REDUCING BUSHING (AS NEEDED)
5. BRICK (1 OF 4)
8. 3" PEA GRAVEL BASE
7. PVC MAINLINE

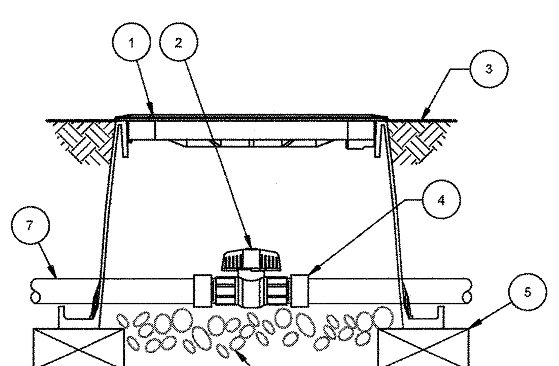

(F) MAINLINE SHUTOFF VALVE

SCALE: NTS

1. STANDARD VALVE BOX w/ LID & EXTENSIONS AS NEEDED: NDS OR EQUAL
2. QUICK COUPLER: SEE IRRIGATION LEGEND
3. FINISHED GRADE: INSTALL 1/2" ABOVE FINISHED GRADE IN TURF AREAS, OR 2" IN SHRUB AREAS
4. HEAVY DUTY GALV. FASTENERS (2 TOTAL)
5. #4 REBAR STAKE - 1/2" x 30"
6. PVC SCH. 80 NIPPLE (LENGTH AS NEEDED)
7. BRICK (1 OF 3)
8. PVC MAINLINE - 1" MIN.
9. PVC SCH 40 TEE / ELL w/ BUSHING AS NEEDED
10. SWING JOINT
11. 4" PEA GRAVEL BASE

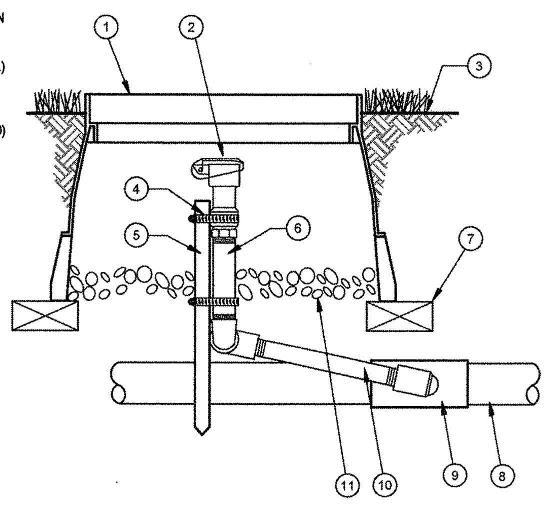

(G) QUICK COUPLER VALVE

SCALE: NTS

1. (2) 14 AWG DIRECT BURIAL WIRE , COLOR: BLACK, TO CONTROLLER, ADD'L 30-INCH LINEAR LENGTH OF WIRE, COILED IN VALVE BOX.
2. WATER PROOF CONNECTIONS (1 OF 2)
3. PLASTIC VALVE ID TAG
4. MASTER VALVE: SEE IRRIGATION LEGEND
5. VALVE BOX WITH COVER & EXTENSIONS AS NEEDED: BROOKS- #1419 INSCRIBE LID WITH 'MV' (MASTER VALVE) OR 'FS' (FLOW SENSOR)
6. FINISH GRADE: VALVE BOX SHOULD BE FLUSH W/ FINISHED GRADE OR TOP OF TURF
7. ALL WIRE TO RUN UNDER MAINLINE
8. BRICK (1 OF 4)
9. PVC MAINLINE PIPE
10. PVC SCH 80 TOE NIPPLE
11. PVC SCH 40 COUPLING, LINE SIZE, WITH REDUCER BUSHING AS NEEDED
12. FLOW SENSOR: SEE IRRIGATION LEGEND
13. (2) COMMUNICATION WIRES TO CONTROLLER, ADD'L 30-INCH LINEAR LENGHT OF WIRE , COILED IN VALVE BOX.
14. 3" MIN. DEPTH OF 3/4"- WASHED GRAVEL.

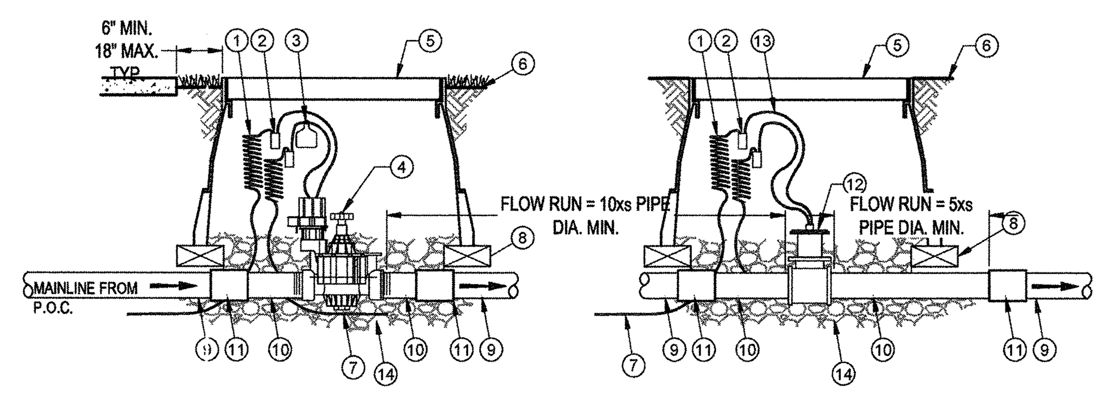

NOTE:
A. ALL FLOW SENSOR WIRE RUNS SHALL BE CONTINUOUS WITH NO SPLICES.
B. MASTER VALVE AND FLOW SENSOR TO BE INSTALLED PER MFR. SPECIFICATION.

(H) MASTER VALVE & FLOW SENSOR DETAIL

SCALE: NTS

1. (2) 14 AWG WIRES TO CONTOLLER , COLOR: RED/WHITE. ADD'L 30-INCH LINEAR LENGHT OF WIRE, COILED IN VALVE BOX.
2. WATER PROOF CONNECTIONS (1 OF 2)
3. PLASTIC VALVE ID TAG
4. REMOTE CONTROL IRRIGATION VALVE: (SEE IRRIGATION LEGEND)
5. STANDARD VALVE BOX w/ COVER: NDS OR EQUAL
6. FINISHED GRADE / TOP OF MULCH
7. PVC SCH 80 NIPPLE (LENGTH AS REQUIRED)
8. BRICK (1 OF 4)
9. PVC MAINLINE
10. PVC SCH 40 TEE OR ELL W/ BUSHING AS NEEDED
11. PVC SCH 40 MALE ADAPTER
12. PVC LATERAL PIPE
13. 3" MIN. DEPTH OF 3/4"-WASHED GRAVEL

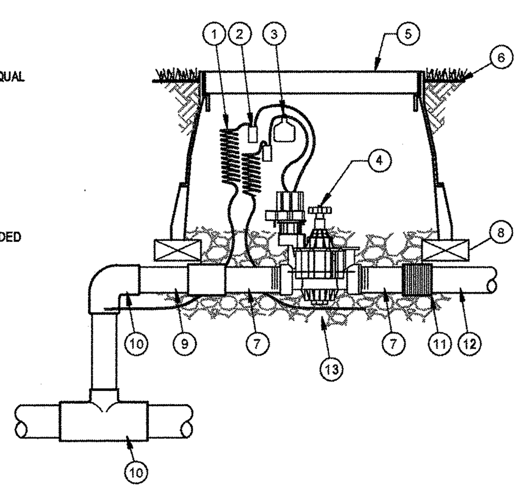

(I) REMOTE CONTROL IRRIGATION VALVE

SCALE: NTS

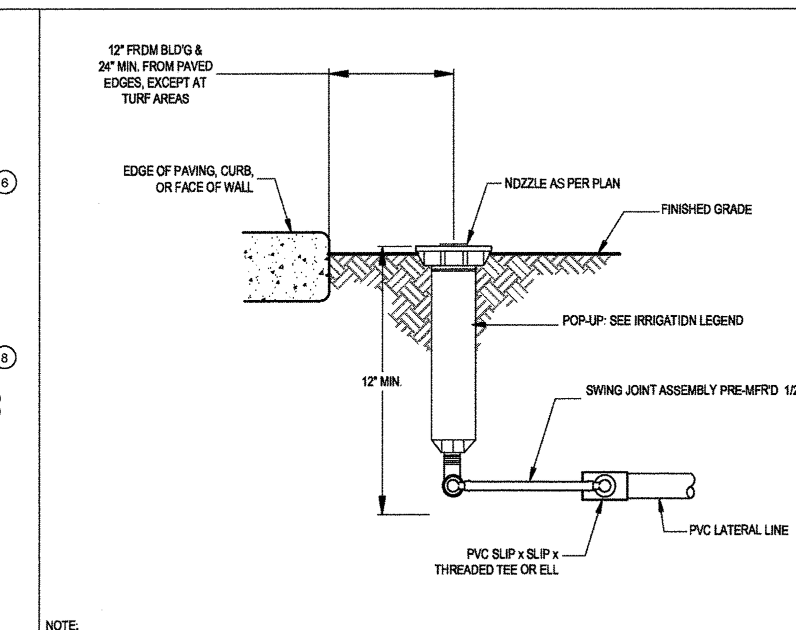

NOTE:
1. 4" POP-UP TO BE FLUSH w/ TURF
2. 6" PO-UP TO BE 1/2" ABOVE GRADE IN SHRUB AREAS

(J) POP-UP SWING ASSEMBLY

SCALE: NTS

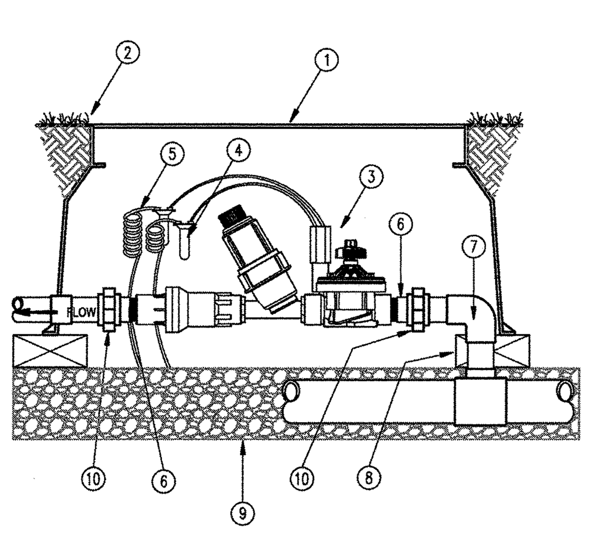

1. JUMBO VALVE BOX
2. FINISH GRADE
3. WATERPROOF CONNECTORS (2)
4. 18-24" COILED WIRE
5. DRIP ZONE KIT: MODEL ICZ-101-40 w/ FILTER
6. SCH 80 T.O.E. NIPPLE
7. MAIN LINE PIPE & FITTINGS
8. BRICK SUPPORTS (4)
9. 3/4" MINUS WASHED GRAVEL
10. PVC SLIP UNIONS (2)

(K) HUNTER DRIP ZONE VALVE KIT

SCALE: NTS

NOTES
1. STAKE TUBING DOWN EVERY 4' AND WITHIN 1' OF ALL FITTING OUTLETS
2. BURY DRIPLINE 2" BELOW FINISH GRADE. LIGHTLY COMPACT COVER SOIL BEFORE INSTALLING TOP DRESS
3. DO NOT EXCEED VELOCITY OF 5 FPS WITHIN TUBING, IF SIZE OF DRIP AREA CREATES VELOCITIES GREATER THAN 5 FPS USE STANDARD LATERAL PIPE TO CREATE SUPPLY HEADER FOR THE DRIP AREA.
4. INSTALL FLUSH VALVE AT POINT FURTHEST FROM SUPPLY POINT.
5. INSTALL AIR RELIEF AT HIGHEST POINT. USE ADD'L AIRELIEF VALVES AS NEEDED
6. THOROUGHLY FLUSH LATERAL AND DRIPLINE PRIOR TO FINAL CONNECTIONS
7. TEST DRIP LINE FOR PROPER OPERATION PRIOR TO COVERING.

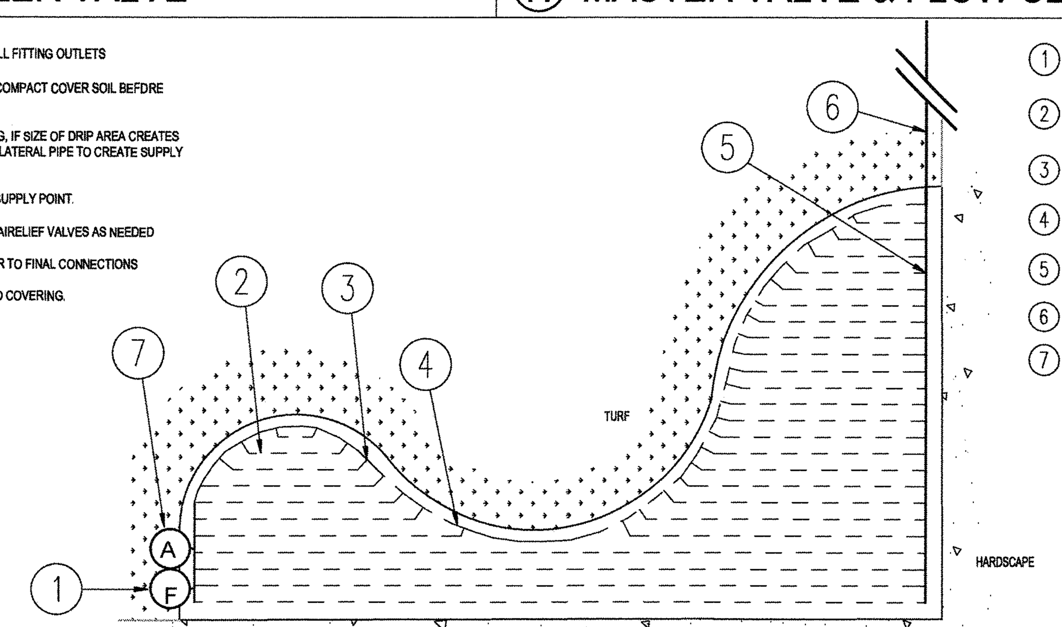

1. FLUSH VALVE
2. HUNTER PLD DRIP LINE (SEE IRRIGATION LEGEND)
3. HUNTER PLD TEE
4. TUBING STAKE
5. LATERAL TO PLD CONNECTION
6. LATERAL PIPE TO PLANTING BED
7. AIR RELIEF AT HIGHEST POINT

(L) HUNTER DRIPLINE

SCALE: NTS

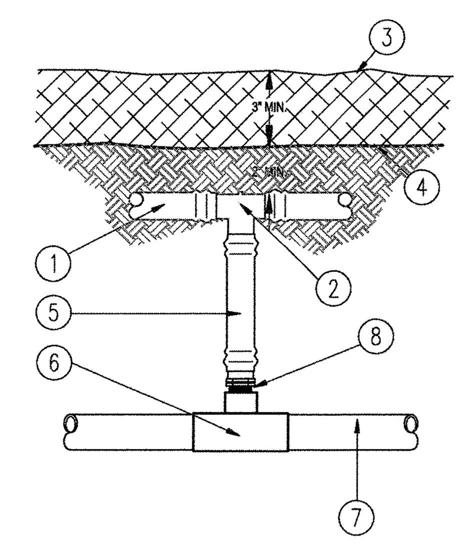

1. HUNTER PLD DRIPLINE TUBING
2. PLD-TEE 17mm BARBxBARB
3. MULCH / TOP SOIL
4. FINISHED GRADE
5. PLD-BLNK
6. 3/4" FPT TEE
7. LATERAL PIPE
8. PLD-075 3/4" MPTxBARB

(M) HUNTER DRIP TO LATERALCONNECTION

SCALE: NTS

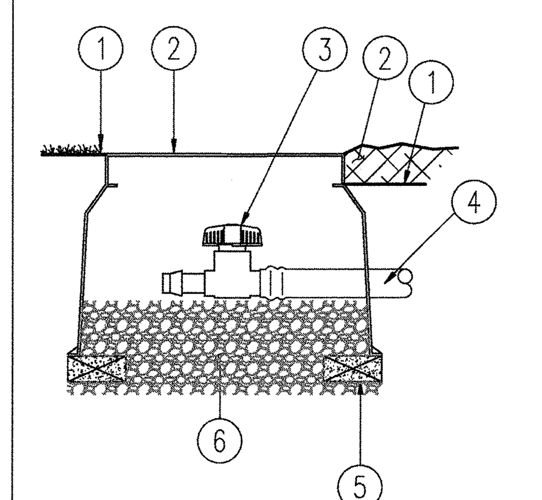

1. FINISH GRADE
2. MULCH AS PER NOTES OR SPECS
3. 6" VALVE BOX - TO BE FLUSH w/ FINISHED GRADE OR TOP OF MULCH
4. DRIP FLUSH VALVE
5. DRIPLINE TUBING (SEE IRRIGATION LEGEND)
6. BRICK SUPPORTS (3)
7. 3/4" GRAVEL SUMP

(N) DRIP FLUSH VALVE

SCALE: NTS

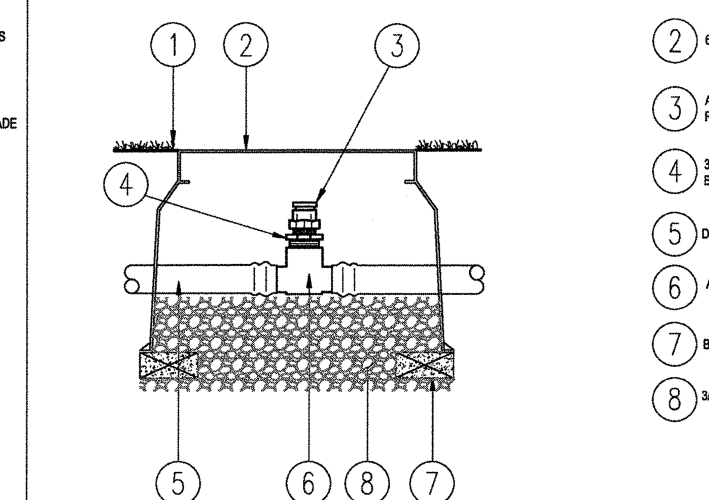

1. FINISH GRADE
2. 6" VALVE BOX
3. AIR/VACUUM RELIEF VALVE
4. 3/4"MPT x 1/2"FPT BUSHING
5. DRIPLINE TUBING
6. ADAPTER TEE
7. BRICK SUPPORTS (3)
8. 3/4" GRAVEL SUMP

(O) DRIP AIR RELIEF VALVE

SCALE: NTS

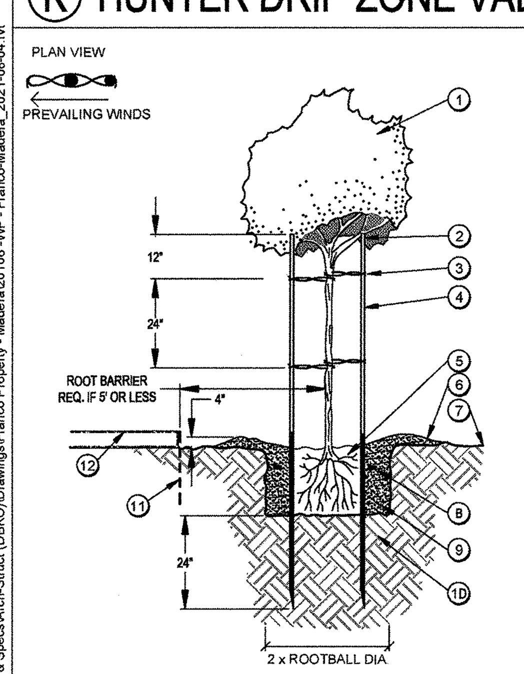

NOTES:
1. TREE PER PLAN
2. TRIM TOP OF STAKES BELOW LOWEST BRANCHES TO PREVENT DAMAGE
3. PLACE TREE TIES 6" ABOVE POINT WHERE TREE HEAD IS SELF-SUPPORTING
4. 2" DIA. x 10' LONG LODGE POLE STAKES (INSTALL WIDER THAN ROOTBALL)
5. ROOTBALL (SET CROWN +/- 3" ABOVE FINISH GRADE)
6. EARTH WATERING BASIN (RAKE SMOOTH PRIOR TO SEEDING IN HYDROSEED AREAS; OR AT END OF PLANT ESTABLISHMENT PERIOD FOR ALL REMAINING BASINS)
7. FINISH GRADE
8. 21 GRAM PLANT TABLETS 5 GAL = 3, 15 GAL = 5, 24" BOX = 8
9. COMPACTED BACKFILL MIX (PER PLANTING SPECS/NOTES)
10. UNDISTURBED NATIVE SOIL
11. LINEAR ROOT BARRIER , 18" DEEP MIN. x 10' wide; CENTERED ON TREE
12. HARDSCAPE, SIDEWALK, CURB

(P) TREE PLANTING w/ ROOT BARRIERS

SCALE: NTS

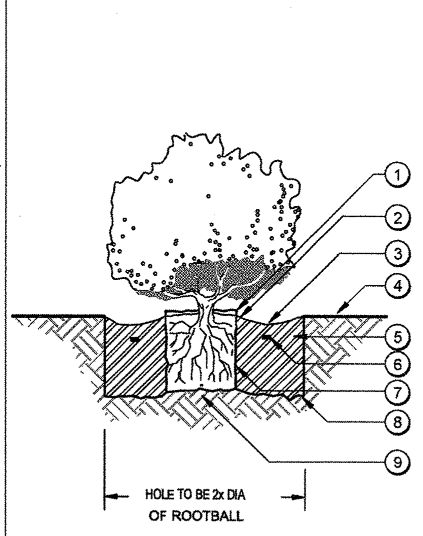

1. SET CROWN OF ROOTBALL 1" ABOVE FINISH GRADE BREAK TOP OF ROOTBALL TO SOIL LEVEL.
2. ROOTBALL
3. WATERING BASIN 3" DEEP, 2'-0" WIDE TO BE BELOW GRADE: FOR 5 GAL AND 1 GAL SIZED CONTAINERS, (NO BOWLS REQUIRED FOR SUB-SURFACE DRIP)
4. FINISH GRADE
5. BACKFILL MIX TO CONSIST OF NATIVE SOIL, CLEAN ALL DEBRIS, ROCK, AND OTHER MATERIAL OUT OF BACKFILL
6. AGRIFORM PLANTING TABS WITHIN 2" OF GRADE -9 GRAM 'FORREST STARTER'
   2 PER 1 GAL SHRUB
   5 PER 5 GAL SHRUB
   8 PER 15 GAL SHRUB
7. ROUGH SIDE OF ROOTBALL PRIOR TO PLANTING
8. HOLES TO BE DEEPER AT PERIMETER
9. SET ROOTBALL ON UNDISTURBED SOIL

(Q) SHRUB PLANTING

SCALE: NTS

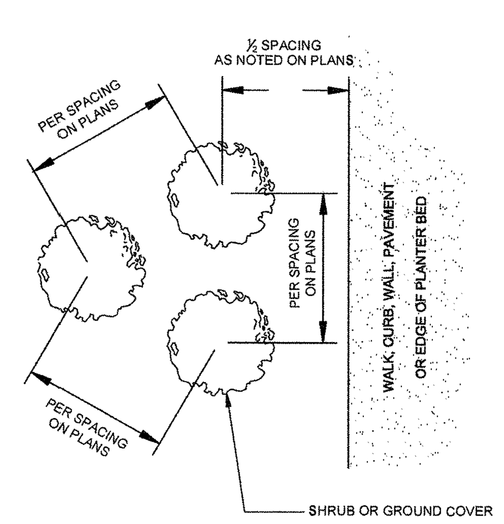

SPACING AS NOTED	PLANTS PER SQUARE FOOT
6" O.C.	4.61
8" O.C.	2.60
10" O.C.	1.66
12" O.C.	1.15
15" O.C.	0.74
18" O.C.	0.50
24" O.C.	0.28
30" O.C.	0.18
36" O.C.	0.12
48" O.C.	0.07
60" O.C.	0.04
72" O.C.	0.03

(R) GROUNDCOVER SPACING

SCALE: NTS

2019CBC
City of Madera
Building Department
The approval of these plans does not prevent the City of Madera from requiring correction of errors or omissions in the plans, specifications of construction. Subject to field inspections and approvals. Laws, Codes and Ordinances.
APPROVED
By:
Date: MAR 0 3 2022

Riverside LANDSCAPE & NURSERY SUPPLIES, INC. 4763 W. SPRUCE AVE. STE. #111 FRESNO, CA 93722 559-275-1891

DBKO DESIGN · BUILD LIC#1032283

WHSE PARTNERS

BY | REVISION | DATE

ANY INFORMATION OR DATA ON THIS DRAWING IS NOT INTENDED TO BE SUITABLE FOR REUSE BY ANY PERSON, FIRM, CORPORATION, OR ANY OTHERS ON EXTENSIONS OF THIS PROJECT OR FOR ANY USE ON ANY OTHER PROJECT. ANY REUSE WITHOUT WRITTEN VERIFICATION AND ADAPTATION BY THE ENGINEER FOR THE SPECIFIC PURPOSE INTENDED WILL BE AT THE USER'S SOLE RISK AND WITHOUT LIABILITY OR LEGAL EXPOSURE TO THE ENGINEER.

SEAL
LICENSED LANDSCAPE ARCHITECT
MICHAEL J. BERNHARDT
RENEW SEPTEMBER 30, 2023
CERTIFICATE NO. 4415
SIGNATURE
15 DEC 2021
DATE
STATE OF CALIFORNIA

LANDSCAPE DETAILS

LEASE FLEX. / WAREHOUSE BUILDINGS
FOR
MADERA INDUSTRIAL WHSE, LLC
S. SCHNOOR AVENUE, MADERA, CA

JOB NUMBER	21107
DESIGNED BY	MH
DRAWN BY	EZ
DATE	12/14/21
SHEET NUMBER	L4.0

G:\Shared drives\DBKOmpany\PROJECTS\20106_WHSE Partners-Fresno, CA\Plans, Calcs & Specs\Arch-Struct (DBKO)\Drawings\Franco Property - Madera\20106 -WP - Franco-Madera_2021-08-04.rvt 8/16/2021 11:49:50 AM

EGRESS / EXITING PLAN LEGEND

STORAGE	ROOM USE
S-1	OCCUPANCY GROUP
19,200 SF	AREA (SQUARE FEET)
1/500 GROSS	OCCUPANT LOAD FACTOR
39	OCCUPANT LOAD

E# — EXIT (AND NUMBER WHERE MORE THAN 1 EXIT/ACCESS REQUIRED)
34 — EXIT CLEAR WIDTH PROVIDED (INCHES)
2.0 — EXIT CLEAR WIDTH REQUIRED (INCHES) BASED ON 0.2 EGRESS FACTOR

(20) — NUMBER OF OCCUPANTS

EXIT ACCESS TRAVEL DISTANCE SCHEDULE

EGRESS PATH ID	OCCUPANT LOAD	TOTAL TRAVEL DISTANCE	ALLOWABLE TRAVEL DISTANCE
A	4	82.9'	250.0'

*TOTAL TRAVEL DISTANCE IS LESS THAN 100.0' THEREFORE A SINGLE EXIT / EXIT ACCESS IS PERMITTED SINCE COMMON PATH OF EGRESS TRAVEL DISTANCE IS LESS THAN 100 FT. FOR A S-1/B OCCUPANCY W/ SPRINKLER SYSTEM (CBC TABLE 1006.2.1)

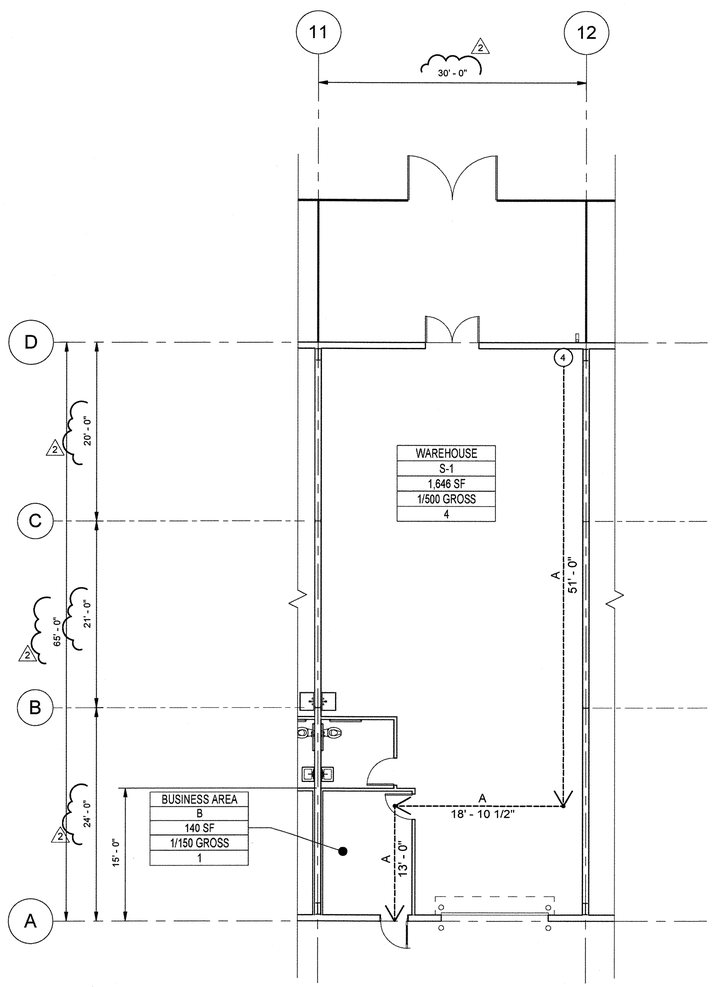

1 / G1.0 TYP. UNIT FLOOR PLAN - EGRESS / EXITING
1/8" = 1'-0"

CODE ANALYSIS - NEW BUILDINGS

APLICABLE BUILDING CODES:
2019 CALIFORNIA BUILDING CODE
2019 CALIFORNIA FIRE CODE
2019 CALIFORNIA PLUMBING CODE
2019 CALIFORNIA MECHANICAL CODE
2019 CALIFORNIA ELECTRICAL CODE
2019 CALIFORNIA ENERGY CODE

TYPE OF CONSTRUCTION:
TYPE II-B, FULLY SPRINKLERED

OCCUPANCY CLASSIFICATIONS:
NONSEPARATED OCCUPANCIES PER CBC 508.3:

S-1 (STORAGE) - FUTURE LEASE SPACES BY TENANTS W/ SMALL WAREHOUSING NEEDS (NO HIGH PILE STORAGE)
B (OFFICE COMMERCIAL)

NOTE - NO PRODUCTS WILL BE STORED OR USED IN THE QUANTITIES EXCEEDED TABLE 307.1(1) OR TABLE 307.1(2) THAT WOULD REQUIRE ANY SPACES OF THIS BUILDING TO MEET H OCCUPANCY REQUIREMENTS.

BUILDING AREA ALLOWABLE:
TABULAR ALLOWABLE AREA, A_t = 70,000 SF - S-1, SPRINKLERED ONE-STORY, TYPE II-B (CBC TABLE 506.2)

(FRONTAGE INCREASE CONSERVATIVELY NOT CONSIDERED)

ACTUAL AREA PROVIDED:

PROPOSED: 37,188 SF (BLDG. A)
37,188 SF (BLDG. B)
35,100 SF (BLDG. C)
35,100 SF (BLDG. D)

BUILDING HEIGHTS:
ALLOWABLE: 75' (CBC TABLE 504.3)

PROPOSED: 24' - 0" MAX. PARAPET HEIGHT

OCCUPANT LOAD
PER EGRESS PLAN THIS SHEET

EGRESS WIDTH
DOOR WIDTH = 0.2 x 34 TOTAL OCCUPANTS = 6.8" REQUIRED (1005.3.2) --> MIN. 34" DOOR OPENINGS USED

MEANS OF EGRESS ILLUMINATION
ILLUMINATION LEVEL IS NOT TO BE LESS THAN 1 FOOTCANDLE AT THE WALKING SURFACE (1008.2).

EMERGENCY POWER - PROVIDE EMERGENCY POWER SYSTEM TO OPERATE THE EGRESS ILLUMINATION FOR A DURATION OF NOT LESS THAN 90 MINS (1008.3)

EXIT SIGNS
EXIT AND EXIT ACCESS DOORS ARE TO BE MARKED BY AN APPROVED EXIT SIGN READILY VISIBLE FROM ANY DIRECTION OF APPROACH. LOCATE AS REQUIRED TO CLEARLY INDICATE THE DIRECTION OF EGRESS TRAVEL. PLACEMENT IS TO BE SUCH THAT NO POINT IN AN EXIT PASSAGE IS MORE THAN 100 FEET (OR LISTED VIEWING DISTANCE FOR SIGN IF LESS THAN 100 FEET) FROM THE NEAREST VISIBLE EXIT SIGN.

EXIT SIGNS SHALL BE INTERNALLY OR EXTERNALLY ILLUMINATED (1013.3) PER APPICABLE SECTION (1013.5 OR 1013.6) AT ALL TIMES AND MEET EMERGENCY ILLUMINATION REQUIREMENTS AS APPLICABLE

COMMON PATH OF EGRESS TRAVEL
SPRINKLER SYSTEM PROVIDED (CBC TABLE 1006.2.1)

MAXIMUM COMMON EGRESS PATH = 100 FT. (B / S OCCUPANCIES - SPRINKLERED)

EXITS
FOR SPACES WITH OCCUPANT LOAD > 49 AND COMMON PATH OF EGRESS TRAVEL > 100' (CBC TABLE 1006.2.1), TWO EXITS/EXIT ACCESSES REQUIRED AND ARE TO REMAIN UNOBSTRUCTED AT ALL TIMES --> OCCUPANT LOAD IS LESS THAN 49 FOR EACH TENANT SPACE THEREFORE ONLY ONE EXIT IS REQUIRED

DOOR SWING IS TO BE IN THE DIRECTION OF EGRESS WHEN THE OCCUPANT LOAD FROM A BUILDING OR SPACE IS GREATER THAN 49 (CBC 1010.1.2.1)

EXCEPTION 1 - EXIT SIGNS ARE NOT REQUIRED IN ROOMS OR AREAS THAT REQUIRE ONLY ONE EXIT OR EXIT ACCESS.

EXCEPTION 2 - MAIN EXTERIOR EXIT DOORS OR GATES THAT ARE OBVIOUSLY AND CLEARLY IDENTIFIABLE AS EXITS NEED NOT HAVE EXIT SIGNS WHERE APPROVED BY THE BUILDING OFFICIAL.

EXIT ACCESS TRAVEL DISTANCE
OCCUPANCY S-1 AND SPRINKLER SYSTEM PROVIDED (TABLE 1017.2)

MAXIMUM EXIT ACCESS TRAVEL DISTANCE PERMITTED = 250' (S-1 - FULLY SPRINKLERED) / 300' (B - FULLY SPRINKLERED)

REQUIRED SEPARATION:
NONE REQUIRED

FIRE RESISTANCE FOR EXTERIOR WALLS:
ALL WALLS GREATER THAN OR EQUAL TO 10' SEPARATION - NONE REQUIRED (TABLE 602)

SMOKE AND HEAT VENTS
HIGH PILE COMBUSTIBLE STORAGE (SECTION 910.2.2)

--> NO HIGH PILED STORAGE PROPOSED IN THIS BUILDING.

FIRE EXTINGUISHERS (CFC SECTION 906)
INSTALLED IN ACCORDANCE WITH NFPA 10 AND IFC 906.9

ORDINARY HAZARD --> PROVIDE MIN. 2-A:10-B:C RATED EXTINGUISHER AT MIN. OF MAXIMUM TRAVEL DISTANCE OF 75 FT OR 11,250 SF MAX. AREA (CFC TABLE 906.3(1))

STORE AND MOUNT IN NON-CORROSIVE ENVIRONMENT TO THE SATISFACTION OF THE FIRE MARSHALL ACCESSIBLE SO THAT THE TOP IS NO MORE THAN 5' ABOVE FINISHED FLOOR (FOR EXTINGUISHERS WEIGHING NO MORE THAN 40 LBS.) AND NO LESS THAN 4" CLEARANCE AT BASE (CBC 906.9). PROVIDE WEATHERPROOF CABINET AT EXTERIOR LOCATIONS.

AT OFFICE AND ADMIN AREAS WHERE WALLS ARE FINISHED WITH GYPBOARD, PROVIDED SEMI-RECESSED CABINET THAT PROTRUDES NO MORE THAN 4" OFF THE WALL SURFACE.

INTERIOR FINISHES (CBC TABLE 803.9)
WALL AND CEILING RATINGS (S, B BUILDINGS - ROOMS AND ENCLOSED SPACES)

CLASS	MAX. FLAME SPREAD INDEX	MAX. SMOKE DEVELOPED INDEX
C	76 - 200	0 - 450

REQUIREMENTS OF SECTIONS 803.2 THRU 803.13 APPLY.

2019CBC
City of Madera
Building Department
The approval of these plans does not prevent the City of Madera from requiring correction of errors or omissions in the plans, specifications or construction. Subject to field inspections and approval of the codes and ordinances.
APPROVED
By
Date MAR 03 2022

DBKO DESIGN-BUILD
UC#1032203

WHSE PARTNERS

DATE	REVISION	BY
11/17/2021	2 PLAN CHECK RESPONSE	

ANY INFORMATION OR DATA ON THIS DRAWING IS NOT INTENDED TO BE SUITABLE FOR REUSE BY ANY PERSON, FIRM, CORPORATION, OR ANY OTHERS ON EXTENSIONS OF THIS PROJECT OR FOR ANY USE ON ANY OTHER PROJECT. ANY REUSE WITHOUT WRITTEN VERIFICATION AND ADAPTATION BY THE ENGINEER FOR THE SPECIFIC PURPOSE INTENDED WILL BE AT THE USER'S SOLE RISK AND WITHOUT LIABILITY OR LEGAL EXPOSURE TO THE ENGINEER.

SEAL
REGISTERED PROFESSIONAL ENGINEER
ROBERT A. TAMAGNO
S5607
STRUCTURAL
STATE OF CALIFORNIA
11/17/2021

EGRESS PLAN AND CODE SUMMARY
LEASE FLEX. / WAREHOUSE BUILDINGS
FOR
MADERA INDUSTRIAL WHSE, LLC
S. SCHNOOR AVENUE, MADERA, CA

JOB NUMBER	21107
DESIGNED BY	RT
DRAWN BY	LM
DATE	9/17/2021
SHEET NUMBER	G1.0

G:\Shared drives\DBKO\Projects\PROJECTS\2019_WHSE Partners-Fresno, CA\Plans, Calcs & Specs\Arch-Struct (DBKO)\Drawings\Fresno Property - Madera\WHSE-BLDGA_2021-09-13.rvt
11/22/2021 2:58:24 PM

11B-304 - TURNING SPACE

11B-304.1 - GENERAL
TURNING SPACES SHALL COMPLY WITH SECTION 11B-304.

11B-304.2 - FLOOR OR GROUND SURFACES
FLOOR OR GROUND SURFACE OF A TURNING SPACE SHALL COMPLY WITH 11B-302. SEE 5/G2.1 CHANGES IN LEVEL ARE NOT PERMITTED (EXCEPT THAT SLOPES NOT STEEPER THAN 1:48 ARE PERMITTED).

11B-304.3 - SIZE
TURNING SPACE SHALL COMPLY WITH SECTION 11B-304.3.1 OR 11B-304.3.2.

11B-304.3.1 - CIRCULAR SPACE
THE TURNING SPACE SHALL BE A SPACE OF 60 INCHES DIAMETER MIN. THE SPACE IS PERMITTED TO INCLUDE KNEE AND TOE CLEARANCE COMPLYING WITH 11B-306 PER 10/G2.1

11B-304.3.2 - T-SHAPED SPACE
THE TURNING SPACE SHALL BE A T-SHAPED SPACE WITHIN A 60 INCH SQUARE MIN. WITH ARMS AND BASE 36 INCHES WIDE MINIMUM. EACH ARM OF THE T SHALL BE CLEAR OF OBSTRUCTIONS 12 INCHES MIN. IN EACH DIRECTION AND THE BASE SHALL BE CLEAR OF OBSTRUCTIONS 24 INCHES MINIMUM. THE SPACE IS PERMITTED TO INCLUDE KNEE AND TOE CLEARANCE COMPLYING WITH 11B-306 ONLY AT THE END OF EITHER THE BASE OR ONE ARM.

11B-304.4 - DOOR SWING
DOORS SHALL BE PERMITTED TO SWING INTO TURNING SPACES

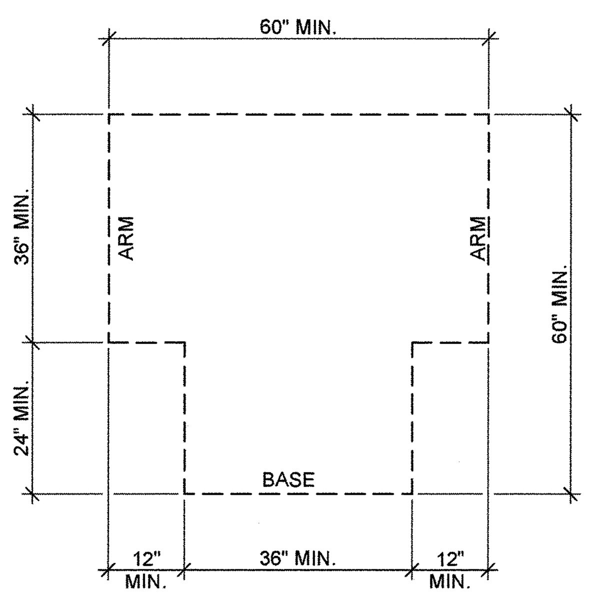

FIG. 11B-304.3.2 - T-SHAPED TURNING SPACE

11B-305 - CLEAR FLOOR OR GROUND SPACE

11B-305.1 - GENERAL
CLEAR FLOOR OR GROUND SPACE SHALL COMPLY WITH SECTION 11B-305.

11B-305.2 - FLOOR OR GROUND SURFACES
FLOOR OR GROUND SURFACE OF A CLEAR FLOOR OR GROUND SPACE SHALL COMPLY WITH 11B-302. CHANGES IN LEVEL ARE NOT PERMITTED (EXCEPT THAT SLOPES NOT STEEPER THAN 1:48 ARE PERMITTED).

11B-305.3 - SIZE
THE CLEAR FLOOR OR GROUND SPACE SHALL BE 30 INCHES MIN. BY 48" MIN.

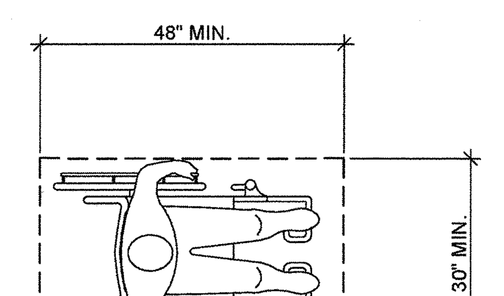

FIG. 11B-305.3 - CLEAR FLOOR OR GROUND SPACE

11B-305 - CLEAR FLOOR OR GROUND SPACE (CONT.)

11B-305.4 - KNEE AND TOE CLEARANCE
UNLESS OTHERWISE SPECIFIED, CLEAR FLOOR OR GROUND SPACE SHALL BE PERMITTED TO INCLUDE KNEE AND TOE CLEARANCE COMPLYING WITH SECTION 11B-306 PER 10/G2.1

11B-305.5 - POSITION
UNLESS OTHERWISE SPECIFIED, CLEAR FLOOR OR GROUND SPACE SHALL BE POSITIONED FOR EITHER FORWARD OR PARALLEL APPROACH TO AN ELEMENT.

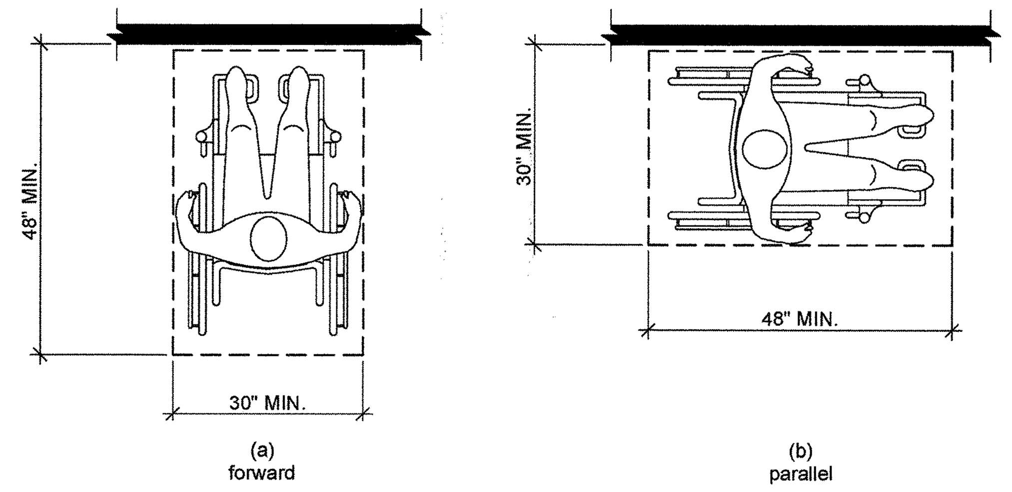

FIG. 11B-305.5 - POSITION OF CLEAR FLOOR OR GROUND SPACE

11B-305.6 - APPROACH
ONE FULL UNOBSTRUCTED SIDE OF THE CLEAR FLOOR OR GROUND SPACE SHALL ADJOIN AN ACCESSIBLE ROUTE OR ADJOIN ANOTHER CLEAR FLOOR OR GROUND SPACE. CLEAR FLOOR OR GROUND SPACE MAY OVERLAP AN ACCESSIBLE ROUTE, UNLESS SPECIFICALLY PROHIBITED ELSEWHERE IN CHAPTER 11B.

11B-305.7 - MANEUVERING CLEARANCE
WHERE A CLEAR FLOOR OR GROUND SPACE IS LOCATED IN AN ALCOVE OR OTHERWISE CONFINED ON ALL OR PART OF THREE SIDES, ADDITIONAL MANEUVERING CLEARANCE SHALL BE PROVIDED IN ACCORDANCE WITH SECTIONS 11B-305.7.1 AND 11B-305.7.2.

11B-305.7.1 - FORWARD APPROACH
ALCOVES SHALL BE 36 INCHES WIDE MIN. WHERE THE DEPTH EXCEEDS 24 INCHES.

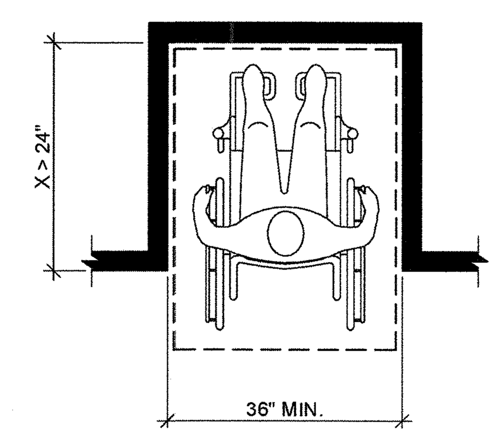

FIG. 11B-305.7.1 - MANEUVERING CLEARANCE IN AN ALCOVE, FORWARD APPROACH

11B-305.7.2 - PARALLEL APPROACH
ALCOVES SHALL BE 60 INCHES WIDE MIN. WHERE THE DEPTH EXCEEDS 15 INCHES.

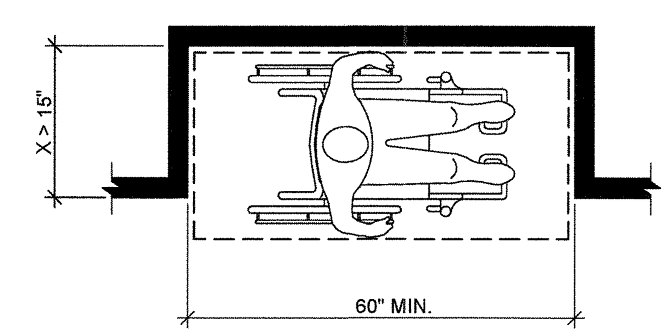

FIG. 11B-305.7.2 - MANEUVERING CLEARANCE IN AN ALCOVE, PARALLEL APPROACH

5/G2.0 ACCESSIBLE TURNING AND CLEAR FLOOR SPACES
1/2" = 1'-0"

11B-309 - OPERABLE PARTS

11B-309.1 - GENERAL
OPERABLE PARTS SHALL COMPLY WITH SECTION 11B-309.

11B-309.2 - CLEAR FLOOR SPACE
A CLEAR FLOOR OR GROUND SPACE COMPLYING WITH SECTION 11B-305 SHALL BE PROVIDED. SEE 5/G2.0

11B-309.3 - HEIGHT
OPERABLE PARTS SHALL BE PLACED WITHIN ONE OR MORE OF THE REACH RANGES SPECIFIED IN 11B-308.

FOR HEIGHT OF RESTROOM DISPENSERS, SEE 1/A2.1

11B-309.4 - OPERATION
OPERABLE PARTS SHALL BE OPERABLE WITH ONE HAND AND SHALL NOT REQUIRE TIGHT GRASPING, PINCHING, OR TWISTING OF THE WRIST. THE FORCE REQUIRED TO ACTIVATE OPERABLE PARTS SHALL BE 5 POUNDS MAX. (5 POUND MAX. FORCE DOES NOT APPLY TO GAS PUMP NOZZLES OR ELECTRIC VEHICLE CONNECTORS).

11B-308 - REACH RANGES

11B-308.1 - GENERAL
REACH RANGES SHALL COMPLY WITH SECTION 11B-308.

11B308.1.1 - ELECTRICAL SWITCHES/CONTROLS
CONTROLS AND SWITCHES INTENDED TO BE USED BY THE OCCUPANT OF THE ROOM OR AREA TO CONTROL LIGHTING AND RECEPTACLE OUTLETS, APPLIANCES, OR COOLING, HEATING, AND VENTILATING EQUIPMENT, SHALL COMPLY WITH SECTION 11B-308 EXCEPT THE LOW REACH SHALL BE MEASURED TO THE BOTTOM OF THE OUTLET BOX AND THE HIGH REACH SHALL BE MEASURED TO THE TOP OF THE OUTLET BOX.

11B-308.1.2 - ELECTRICAL RECEPTACLE OUTLETS
ELECTRICAL RECEPTACLE OUTLETS ON BRANCH CIRCUITS OF 30 AMPERES OR LESS & COMM. SYSTEM RECEPTACLES SHALL COMPLY WITH SECTION 11B-308 EXCEPT THE LOW REACH SHALL BE MEASURED TO THE BOTTOM OF THE OUTLET BOX AND THE HIGH REACH SHALL BE MEASURED TO THE TOP OF THE OUTLET BOX.

11B-308.2 - FORWARD REACH

11B-308.2.1 - UNOBSTRUCTED FORWARD REACH
WHERE A FORWARD REACH IS UNOBSTRUCTED, THE HIGH FORWARD REACH SHALL BE 48 INCHES MAX. AND LOW FORWARD REACH SHALL BE 15 INCHES MIN. ABOVE THE FINISHED FLOOR OR GROUND.

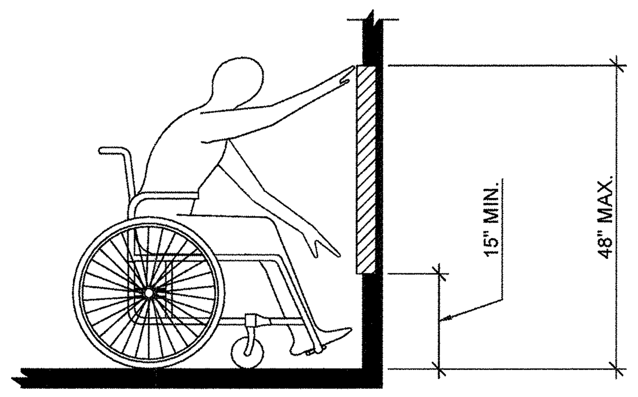

FIG. 11B-308.2.1 - UNOBSTRUCTED FORWARD REACH

11B-308.2.2 - OBSTRUCTED HIGH FORWARD REACH
WHERE A HIGH FORWARD REACH IS OVER AN OBSTRUCTION, THE CLEAR FLOOR SPACE SHALL EXTEND BENEATH THE ELEMENT FOR A DISTANCE NOT LESS THAN THE REQUIRED REACH DEPTH OVER THE OBSTRUCTION. THE HIGH FORWARD REACH SHALL BE 48 INCHES MAX. WHERE THE REACH DEPTH IS 20 INCHES MAXIMUM. WHERE THE REACH DEPTH EXCEEDS 20 INCHES, THE HIGH FORWARD REACH SHALL BE 44 INCHES MAX. AND THE REACH DEPTH SHALL BE 25 INCHES MAXIMUM .

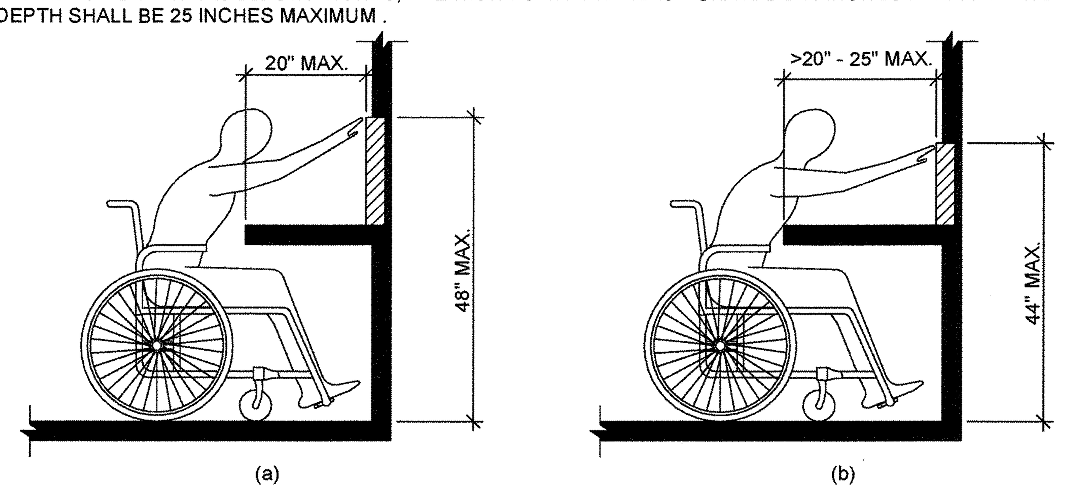

FIG. 11B-308.2.2 - OBSTRUCTED HIGH FORWARD REACH

7/G2.0 ACCESSIBILTY AT OPERABLE PARTS AND REACH RANGES
1/2" = 1'-0"

11B-308.3 - SIDE REACH

11B-308.3.1 - UNOBSTRUCTED SIDE REACH
WHERE A CLEAR FLOOR OR GROUND SPACE ALLOWS A PARALLEL APPROACH TO AN ELEMENT AND THE SIDE REACH IS UNOBSTRUCTED, THE HIGH SIDE REACH SHALL BE 48 INCHES MAX. AND THE LOW SIDE REACH SHALL BE 15 INCHES MIN. ABOVE THE FINISHED FLOOR OR GROUND.

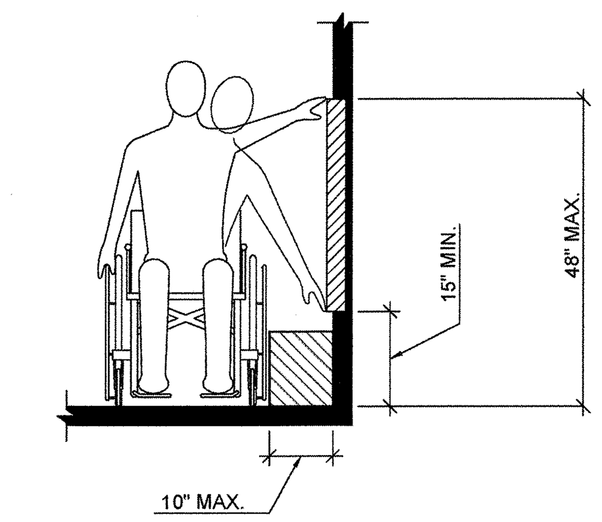

FIG. 11B-308.3.1 - UNOBSTRUCTED SIDE REACH

11B-308.3.2 - OBSTRUCTED HIGH SIDE REACH
WHERE A CLEAR FLOOR OR GROUND SPACE ALLOWS A PARALLEL APPROACH TO AN ELEMENT AND THE HIGH SIDE REACH IS OVER AN OBSTRUCTION, THE HEIGHT OF THE OBSTRUCTION SHALL BE 34 INCHES MAX. AND THE DEPTH OF THE OBSTRUCTION SHALL BE 24 INCHES MAX.
THE HIGH SIDE REACH SHALL BE 48 INCHES MAX. FOR A REACH DEPTH OF 10 INCHES MAXIMUM. WHERE THE REACH DEPTH EXCEEDS 10 INCHES, THE HIGH SIDE REACH SHALL BE 46 INCHES MAX. FOR A REACH DEPTH OF 24 INCHES MAX.

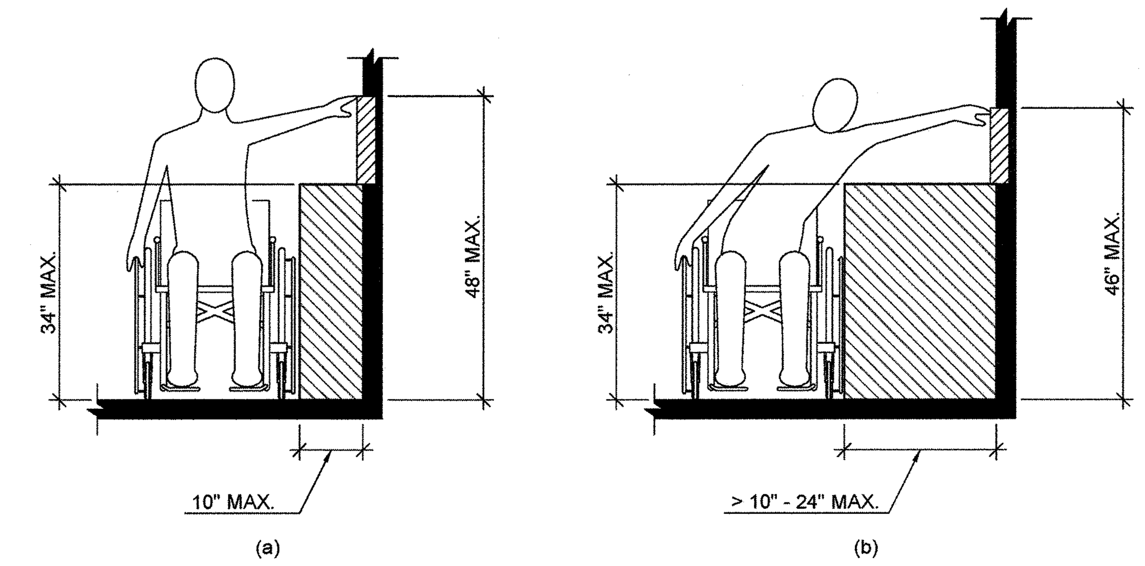

FIG. 11B-308.3.2 - OBSTRUCTED HIGH SIDE REACH

11B-307 - PROTRUDING OBJECTS

11B-307.2 - PROTRUSION LIMITS
OBJECTS WITH LEADING EDGES MORE THAN 27 INCHES AND NOT MORE THAN 80 INCHES ABOVE THE FINISHED FLOOR OR GROUND SHALL PROTRUDE 4 INCHES MAX. INTO THE CIRCULATION PATH (EXCEPT HANDRAILS SHALL BE PERMITTED TO PROTRUDE 4-1/2 INCHES MAX.)

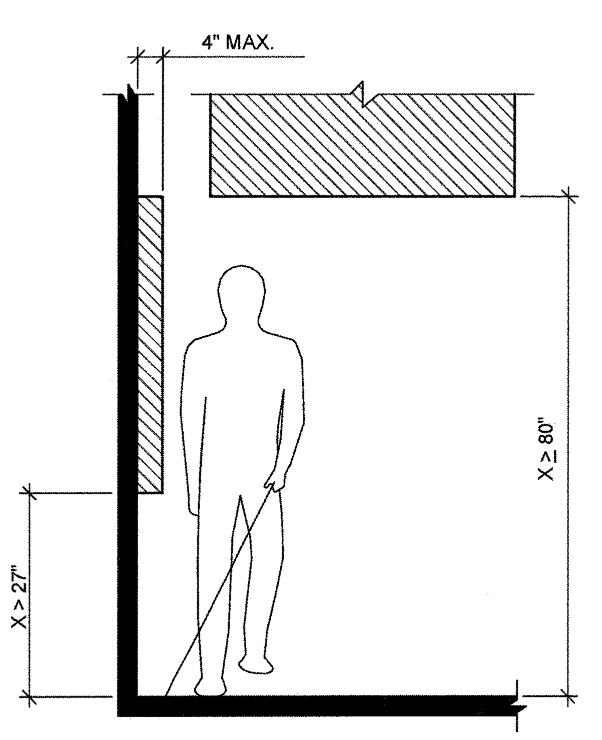

FIG. 11B-307.2 - LIMITS OF PROTRUDING OBJECTS

11B-307.3 - POST-MOUNTED OBJECTS
FREE-STANDING OBJECTS MOUNTED ON POSTS OR PYLONS SHALL OVERHANG CIRCULATION PATHS 12 INCHES MAX. WHEN LOCATED 27 INCHES MIN. AND 80 INCHES MAX. ABOVE THE FINISHED FLOOR OR GROUND. WHERE A SIGN OR OTHER OBSTRUCTION IS MOUNTED BETWEEN POSTS OR PYLONS AND THE CLEAR DISTANCE BETWEEN THE POSTS OR PYLONS IS GREATER THAN 12 INCHES, THE LOWEST EDGE OF SUCH SIGN OR OBSTRUCTION SHALL BE 27 INCHES MAX. OR 80 INCHES MIN. ABOVE THE FINISHED FLOOR OR GROUND.

11B-307.3.1 - EDGES AND CORNERS
WHERE SIGNS OR OTHER OBJECTS ARE MOUNTED ON POSTS OR PYLONS, AND THEIR BOTTOM EDGES ARE LESS THAN 80 INCHES ABOVE THE FLOOR OR GROUND SURFACE, THE EDGES OF SUCH SIGNS AND OBJECTS SHALL BE ROUNDED OR EASED AND THE CORNERS SHALL HAVE A MINIMUM RADIUS OF 1/8 INCH.

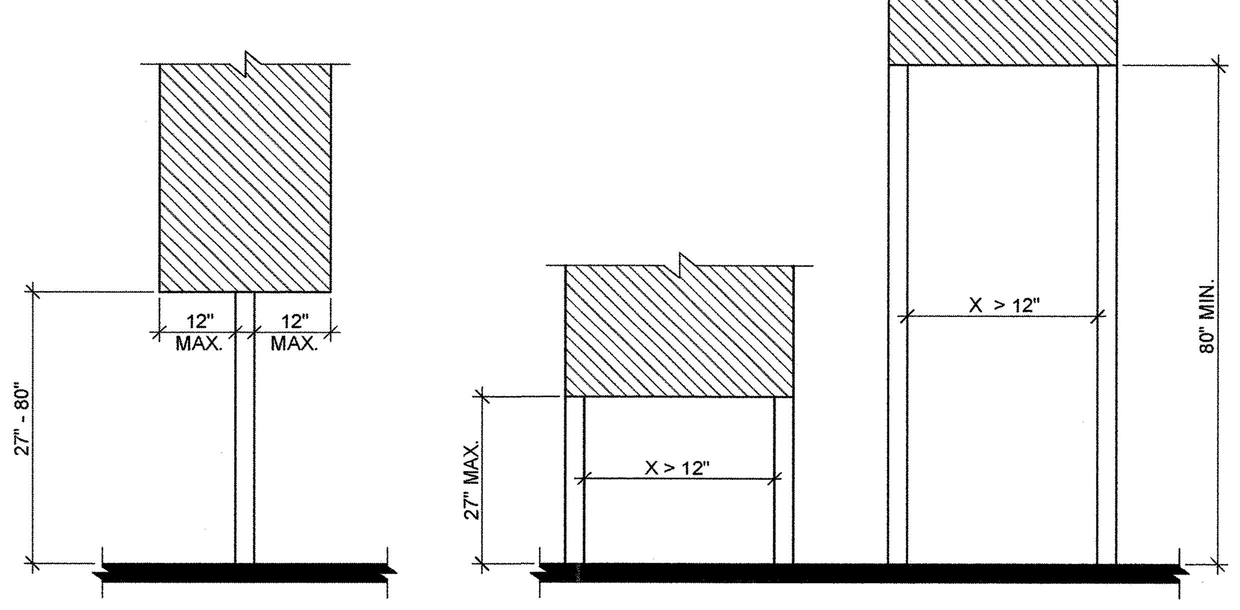

FIG. 11B-307.3 - POST-MOUNTED PROTRUDING OBJECTS

11B-307.4 - VERTICAL CLEARANCE
VERTICAL CLEARANCE SHALL BE 80 INCHES HIGH MINIMUM. GUARDRAILS OR OTHER BARRIERS SHALL BE PROVIDED WHERE THE VERTICAL CLEARANCE IS LESS THAN 80 INCHES HIGH. THE LEADING EDGE OF SUCH GUARDRAIL OR BARRIER SHALL BE LOCATED 27 INCHES MAXIMUM ABOVE THE FINISHED FLOOR OR GROUND.

EXCEPTION: DOOR CLOSERS AND DOOR STOPS SHALL BE PERMITTED TO BE 78 INCHES MIN. ABOVE THE FINISHED FLOOR OR GROUND.

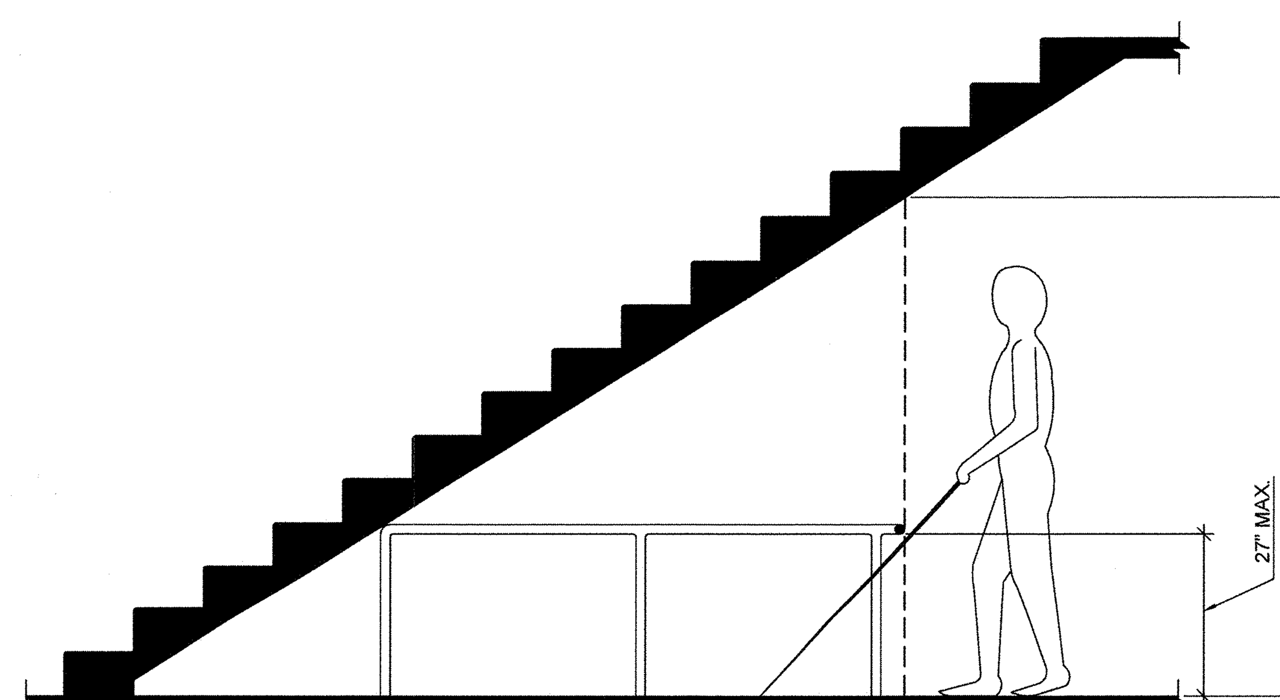

FIG. 11B-307.4 - VERTICAL CLEARANCE

9/G2.0 WALL AND POST-MOUNTED PROTRUDING OBJECT REQUIREMENTS
1/2" = 1'-0"

2019CBC
City of Madera
Building Department
The approval of these plans does not prevent the City of Madera from requiring correction of errors or omissions in the plans, specifications or construction. Subject to field inspections and approvals. Codes and Ordinances
APPROVED
By:
Date: MAR 0 3 2022

DBKO DESIGN BUILD LIC#1032283

WHSE [PARTNERS]

BY	REVISION	DATE

ANY INFORMATION OR DATA ON THIS DRAWING IS NOT INTENDED TO BE SUITABLE FOR REUSE BY ANY PERSON, FIRM, CORPORATION, OR ANY OTHERS ON EXTENSIONS OF THIS PROJECT OR FOR ANY USE ON ANY OTHER PROJECT. ANY REUSE WITHOUT WRITTEN VERIFICATION AND ADAPTATION BY THE ENGINEER FOR THE SPECIFIC PURPOSE INTENDED WILL BE AT THE USER'S SOLE RISK AND WITHOUT LIABILITY OR LEGAL EXPOSURE TO THE ENGINEER.

SEAL
REGISTERED PROFESSIONAL ENGINEER
ROBERT A. TAMACCIO
S5607
STRUCTURAL
STATE OF CALIFORNIA
11/17/2021

MISC. ACCESSIBILITY DETAILS
LEASE FLEX. / WAREHOUSE BUILDINGS
FOR
MADERA INDUSTRIAL WHSE, LLC
S. SCHNOOR AVENUE, MADERA, CA

JOB NUMBER 21107
DESIGNED BY RT
DRAWN BY LM
DATE 9/17/2021
SHEET NUMBER G2.0

11/22/2021 2:59:26 PM
G:\Shared drives\DBKOmpany\PROJECTS\20106_WHSE Partners-Fresno, CA\Plans, Calcs & Specs\Arch-Struct (DBKO)\Drawings\Franco Property - Madera\WHSE-BLDGA_2021-09-12.rvt

11B-302 - FLOOR OR GROUND SURFACES

11B-302.1 - GENERAL
FLOOR AND GROUND SURFACES SHALL BE STABLE, FIRM, AND SLIP RESISTANT AND COMPLY WITH 11B-302.

EXCEPTIONS: 1. WITHIN ANIMAL CONTAINMENT AREAS, FLOOR AND GROUND SURFACES SHALL NOT BE REQUIRED TO BE STABLE, FIRM, AND SLIP RESISTANT.

2. AREAS OF SPORT ACTIVITY SHALL NOT BE REQUIRED TO COMPLY WITH 11B-302.

11B-302.2 - CARPET
CARPET OR TILE SHALL BE SECURELY ATTACHED AND SHALL HAVE FIRM CUSHION, PAD, OR BACKING OR NO CUSHION OR PAD. CARPET OR CARPET TILE SHALL HAVE A LEVEL LOOP, TEXTURED LOOP, LEVEL CUT PILE, LEVEL CUT/UNCUT PILE TEXTURE. PILE HEIGHT SHALL BE 1/2 INCH MAXIMUM. EXPOSED EDGES OF CARPET SHALL BE FASTENED TO FLOOR SURFACES AND SHALL HAVE TRIM ON THE ENTIRE LENGTH OF THE EXPOSED EDGE. CARPET EDGE TRIM SHALL COMPLY WITH 11B-303.

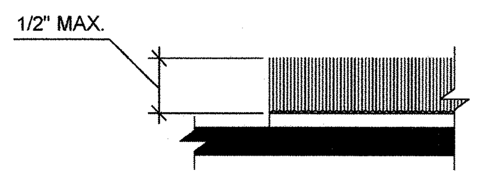

FIG. 11B-302.2 - CARPET PILE HEIGHT

11B-302.3 - OPENINGS
OPENINGS IN FLOOR OR GROUND SURFACES SHALL NOT ALLOW PASSAGE OF A SPHERE MORE THAN 1/2 INCH DIAMETER EXCEPT AS ALLOWED IN SECTIONS 11B-407.4.3, 11B-409.4.3, 11B-410.4, 11B810.5.3 AND 11B810.10. ENLOGATED OPENINGS SHALL BE PLACED SO THAT THE LONG DIMENSION IS PERPENDICULAR TO THE DOMINANT DIRECTION OF TRAVEL.

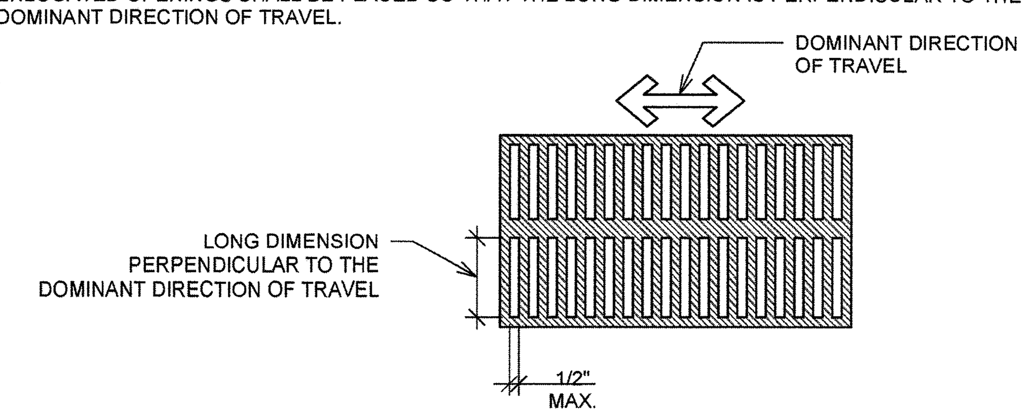

FIG. 11B-302.3 - ELONGATED OPENINGS IN FLOOR OR GROUND SURFACES

11B-303 - CHANGES IN LEVEL

11B-303.1 - GENERAL
WHERE CHANGES IN LEVEL ARE PERMITTED IN FLOOR AND GROUND SURFACES, THEY SHALL COMPLY WITH SECTION 11B-303.

EXCEPTIONS: 1. ANIMAL CONTAINMENT AREAS SHALL NOT BE REQUIRED TO COMPLY WITH 11B-303.

2. AREAS OF SPORT ACTIVITY SHALL NOT BE REQUIRED TO COMPLY WITH 11B-303.

11B-303.2 - VERTICAL
CHANGES IN LEVEL OF 1/4 INCH HIGH MAXIMUM SHALL BE PERMITTED TO BE VERTICAL AND WITHOUT EDGE TREATMENT.

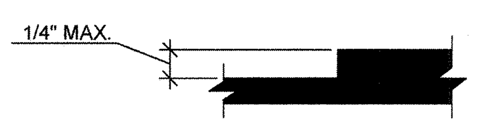

FIG. 11B-303.2 - VERTICAL CHANGE IN LEVEL

11B-303.3 - BEVELED
CHANGES IN LEVEL BETWEEN 1/4 INCH HIGH MIN. AND 1/2 INCH HIGH MAX. SHALL BE BEVELED WITH A SLOPE NOT STEEPER THAN 1:2.

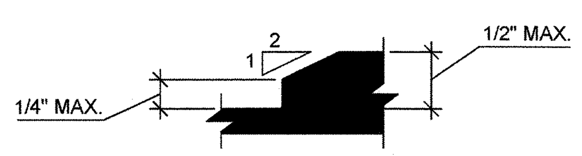

FIG. 11B-303.3 - BEVELED CHANGE IN LEVEL

11B-303.4 - RAMPS
CHANGES IN LEVEL GREATER THAN 1/2 INCH HIGH SHALL BE RAMPED, AND SHALL COMPLY WITH SECTIONS 11B-405 OR 11B-406.

5 / G2.1 FLOOR/GROUND SURFACES AND CHANGES IN LEVEL
3/8" = 1'-0"

11B-306 - KNEE AND TOE CLEARANCE

11B-306.1 - GENERAL
WHERE THE SPACE BENEATH AN ELEMENT IS INCLUDED AS PART OF CLEAR FLOOR OR GROUND SPACE OR TURNING SPACE, THE SPACE SHALL COMPLY WITH THIS SECTION. ADDITIONAL SPACE SHALL NOT BE PROHIBITED BENEATH AN ELEMENT BUT SHALL NOT BE CONSIDERED AS PART OF THE CLEAR FLOOR OR GROUND SPACE OR TURNING SPACE.

11B-306.2 - TOE CLEARANCE

11B-306.2.1 - GENERAL
SPACE UNDER AN ELEMENT BETWEEN THE FINISHED FLOOR OR GROUND AND 9 INCHES ABOVE THE FINISHED FLOOR OR GROUND SHALL BE CONSIDERED TOE CLEARANCE AND SHALL COMPLY WITH 11B-306.2

11B-306.2.2 - MAXIMUM DEPTH
TOE CLEARANCE SHALL EXTEND 25 INCHES MAX. UNDER AN ELEMENT.

EXCEPTION: TOE CLEARANCE SHALL EXTEND 19 INCHES MAX. UNDER LAVATORIES REQUIRED TO BE ACCESSIBLE. SEE 1 / A2.1

11B-306.2.3 - MINIMUM REQUIRED DEPTH
WHERE TOE CLEARANCE IS REQUIRED AT AN ELEMENT AS PART OF A CLEAR FLOOR SPACE, THE TOE CLEARANCE SHALL EXTEND 17 INCHES MIN. UNDER THE ELEMENT.

EXCEPTIONS: 1. THE TOE CLEARANCE SHALL EXTEND 19 INCHES MINIMUM UNDER SINKS REQUIRED TO BE ACCESSIBLE BY SECTION 11B-212.3.

2. THE TOE CLEARANCE SHALL EXTEND 19 INCHES MINIMUM UNDER BUILT-IN DINING AND WORK SURFACES REQUIRED TO BE ACCESSIBLE BY SECTION 11B-226.1.

11B-306.2.4 - ADDITIONAL CLEARANCE
SPACE EXTENDING GREATER THAN 6 INCHES BEYOND THE AVAILABLE KNEE CLEARANCE AT 9 INCHES ABOVE THE FINISHED FLOOR OR GROUND SHALL NOT BE CONSIDERED TOE CLEARANCE.

11B-306.2.5 - WIDTH
TOE CLEARANCE SHALL BE 30 INCHES WIDE MIN.

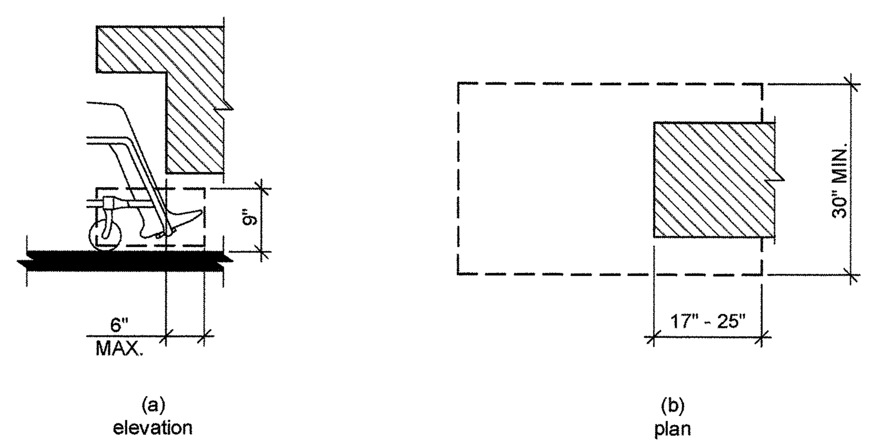

FIG. 11B-306.2 - TOE CLEARANCE

11B-306.3 - KNEE CLEARANCE

11B-306.3.1 - GENERAL
SPACE UNDER AN ELEMENT BETWEEN 9 INCHES AND 27 INCHES ABOVE THE FINISHED FLOOR OR GROUND SHALL BE CONSIDERED KNEE CLEARANCE AND SHALL COMPLY WITH 11B-306.3

EXCEPTION: AT LAVATORIES REQUIRED TO BE ACCESSIBLE PER 11B-213.3.4, SPACE BETWEEN 9 INCHES AND 29 INCHES ABOVE THE FINISHED FLOOR OR GROUND, SHALL BE CONSIDERED KNEE CLEARANCE.

11B-306.3.2 - MAXIMUM DEPTH
KNEE CLEARANCE SHALL EXTEND 25 INCHES MAX. UNDER AN ELEMENT AT 9 INCHES ABOVE THE FINISHED FLOOR OR GROUND.

11B-306.3.3 - MINIMUM REQUIRED DEPTH
WHERE KNEE CLEARANCE IS REQUIRED AT AN ELEMENT AS PART OF A CLEAR FLOOR SPACE, THE KNEE CLEARANCE SHALL BE 11 INCHES DEEP MIN. AT 9 INCHES ABOVE THE FINISHED FLOOR OR GROUND, AND 8 INCHES DEEP MIN. AT 27 INCHES ABOVE THE FINISHED FLOOR OR GROUND.

EXCEPTIONS: 1. AT LAVATORIES REQUIRED TO BE ACCESSIBLE BY 11B-213.3.4, THE KNEE CLEARANCE SHALL BE 27 INCHES HIGH MIN. ABOVE THE FINISHED FLOOR OR GROUND AT A DEPTH OF 8 INCHES MIN. INCREASING TO 29 INCHES HIGH MIN. ABOVE THE FINISHED FLOOR OR GROUND AT THE FRONT EDGE OF A COUNTER WITH A BUILT-IN LAVATORY OR AT THE FRONT EDGE OF A WALL-MOUNTED LAVATORY FIXTURE.

2. AT DINING AND WORK SURFACES REQUIRED TO BE ACCESSIBLE BY 11B-226.1, KNEE CLEARANCE SHALL EXTEND 19 INCHES DEEP MIN. AT 27 INCHES ABOVE THE FINISHED FLOOR OR GROUND.

11B-306.3.4 - CLEARANCE REDUCTION
BETWEEN 9 INCHES AND 27 INCHES ABOVE THE FINISHED FLOOR OR GROUND, THE KNEE CLEARANCE SHALL BE PERMITTED TO REDUCE AT A RATE OF 1 INCH IN DEPTH FOR EACH 6 INCHES IN HEIGHT.

EXCEPTION: THE KNEE CLEARANCE SHALL NOT BE REDUCED AT BUILT-IN DINING AND WORK SURFACES REQUIRED TO BE ACCESSIBLE PER 11B-226.1

11B-306.3.5 - WIDTH
KNEE CLEARANCE SHALL BE 30 INCHES WIDE MIN.

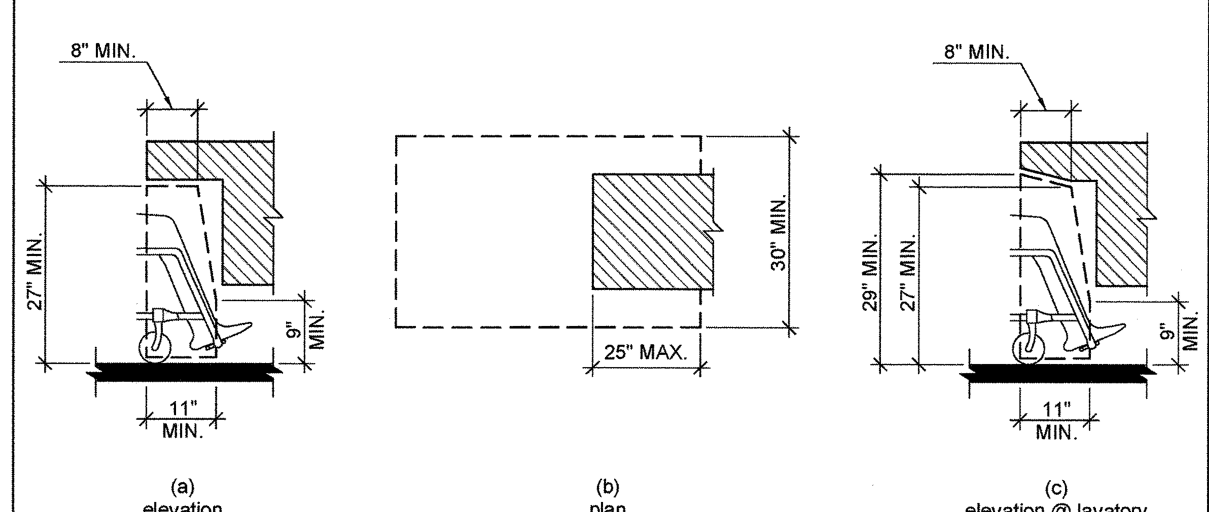

FIG. 11B-306.3 - KNEE CLEARANCE

10 / G2.1 ACCESSIBILE KNEE AND TOE CLEARANCE
1/2" = 1'-0"

11B-402 - ACCESSIBLE ROUTES

11B-402.2 - COMPONENTS
ACCESSIBLE ROUTES SHALL CONSIST OF ONE OR MORE OF THE FOLLOWING COMPONENTS: WALKING SURFACES WITH A RUNNING SLOPE OF 1:20, DOORWAYS, RAMPS, CURB RAMPS EXCLUDING THE FLARED SIDES, ELEVATORS, AND PLATFORM LIFTS. ALL COMPONENTS OF AN ACCESSIBLE ROUTE SHALL COMPLY WITH THE APPLICABLE REQUIREMENTS OF DIVISION 4.

11B-403 - WALKING SURFACES

11B-403.1 - GENERAL
WALKING SURFACES THAT ARE PART OF AN ACCESSIBLE ROUTE SHALL COMPLY WITH 11B-403.

11B-403.2 - FLOOR OR GROUND SURFACE
FLOOR OR GROUND SURFACES SHALL COMPLY WITH 11B-302. SEE 5 / G2.1

11B-403.3 - SLOPE
THE RUNNING SLOPE OF WALKING SURFACES SHALL NOT BE STEEPER THAN 1:20. THE CROSS SLOPE OF WALKING SURFACES SHALL NOT BE STEEPER THAN 1:48.

EXCEPTION: THE RUNNING SLOPE OF SIDEWALKS SHALL NOT EXCEED THE GENERAL GRADE ESTABLISHED FOR THE ADJACENT STREET OR HIGHWAY.

11B-403.4 - CHANGES IN LEVEL
CHANGES IN LEVEL SHALL COMPLY WITH SECTION 11B-303. SEE 5 / G2.1

11B-403.5 - CLEARANCES
WALKING SURFACES SHALL PROVIDE CLEARANCES COMPLYING WITH 11B-403.5.

EXCEPTION: WITHIN EMPLOYEE WORK AREAS, CLEARANCES ON COMMON USE CIRCULATION PATHS SHALL BE PERMITTED TO BE DECREASED BY WORK AREA EQUIPMENT PROVIDE THAT THE DECREASE IS ESSENTIAL TO THE FUNCTION OF THE WORK BEING PERFORMED.

11B-403.5.1 - CLEAR WIDTH
EXCEPT AS PROVIDED IN SECTIONS 11B-403.5.2 AND 11B-403.5.3, THE CLEAR WIDTH OF WALKING SURFACES SHALL BE 36 INCHES MIN.

EXCEPTIONS: 1. THE CLEAR WIDTH SHALL BE PERMITTED TO BE REDUCED TO 32 INCHES MIN. FOR A LENGTH OF 24 INCHES MAXIMUM PROVIDED THAT THE REDUCED WIDTH SEGMENTS ARE SEPARATED BY SEGMENTS THAT ARE 48 INCHES LONG MIN. AND 36 INCHES WIDE MIN.

2. THE CLEAR WIDTH FOR WALKING SURFACES IN CORRIDORS SERVING AN OCCUPANT LOAD OF 10 OR MORE SHALL BE 44 INCHES MINIMUM.

3. THE CLEAR WIDTH FOR SIDEWALKS AND WALKS SHALL BE 48 INCHES MINIMUM. WHEN, BECAUSE OF RIGHT-OF-WAY RESTRICTIONS, NATURAL BARRIERS, OR OTHER EXISTING CONDITIONS, THE ENFORCING AGENCY DETERMINES THAT COMPLIANCE WITH THE 48 INCH CLEAR SIDEWALK WIDTH WOULD CREATE AN UNREASONABLE HARDSHIP, THE CLEAR WIDTH MAY BE REDUCED TO 36 INCHES.

4. THE CLEAR WIDTH FOR AISLES SHALL BE 36 INCHES MIN. IF SERVING ELEMENTS ON ONE SIDE, AND 44 INCHES MIN. IF SERVING ELEMENTS ON BOTH SIDES.

5. THE CLEAR WIDTH FOR ACCESSIBLE ROUTES TO ACCESSIBLE TOILET COMPARTMENTS SHALL BE 44 INCHES EXCEPT FOR DOOR-OPENING WIDTHS AND DOOR SWINGS.

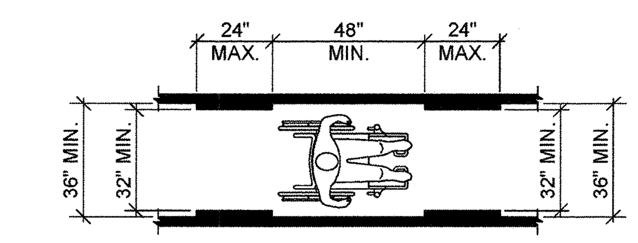

FIG. 11B-403.5.1 - CLEAR WIDTH OF AN ACCESSIBLE ROUTE

11B-403.5.2 - CLEAR WIDTH AT TURN
WHERE THE ACCESSIBLE ROUTE MAKES A 180 DEGREE TURN AROUND AN ELEMENT WHICH IS LESS THAN 48 INCHES WIDE, CLEAR WIDTH SHALL BE 42 INCHES MIN. APPROACHING THE TURN, 48 INCHES MIN. AT THE TURN AND 42 INCHES MIN. LEAVING THE TURN.

EXCEPTION: WHERE THE CLEAR WIDTH AT THE TURN IS 60 INCHES MIN., COMPLIANCE WITH 11B-403.5.2 SHALL NOT BE REQUIRED.

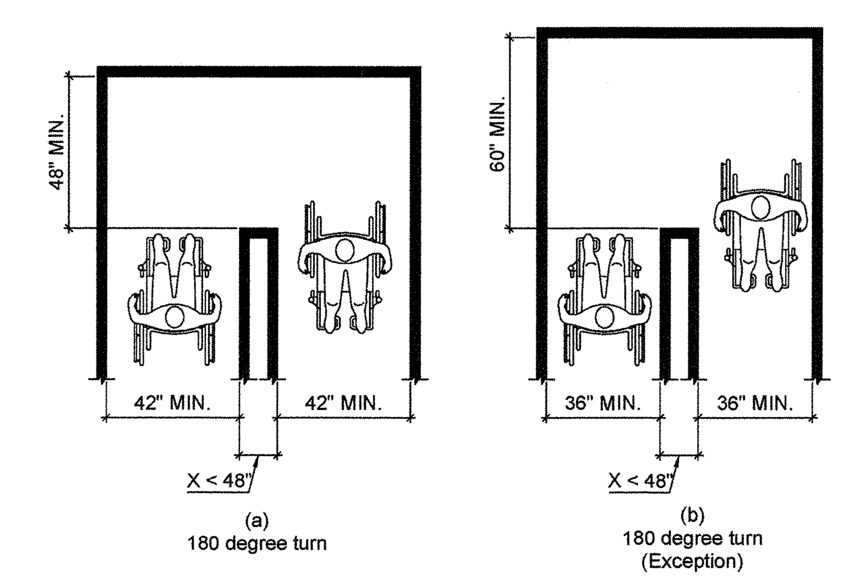

FIG. 11B-403.5.2 - CLEAR WIDTH AT TURN

11B-403.5.3 - PASSING SPACES
AN ACCESSIBLE ROUTE WITH A CLEAR WIDTH LESS THAN 60 INCHES SHALL PROVIDE PASSING SPACES AT INTERVALS OF 200 FEET MAXIMUM. PASSING SPACES SHALL BE EITHER: A SPACE 60 INCHES MIN. BY 60 INCHES MIN.; OR, AN INTERSECTION OF TWO WALKING SURFACES PROVIDING A T-SHAPED SPACE COMPLYING WITH 11B-304.3.2 WHERE THE BASE AND ARMS OF THE T-SHAPED SPACE EXTEND 48 INCHES MIN. BEYOND THE INTERSECTION.

11 / G2.1 ACCESSIBILE ROUTES AND WALKING SURFACES
1/4" = 1'-0"

2019CBC
City of Madera
Building Department
The approval of these plans does not prevent the City of Madera from requiring correction of errors or omissions in the plans, specifications or construction. Subject to field inspections and approvals Laws, Codes and Ordinances.
APPROVED
By:
Date: MAR 0 3 2022

DBKO DESIGN BUILD
LIC#1032283

WHSE [PARTNERS]

BY | REVISION | DATE

ANY INFORMATION OR DATA ON THIS DRAWING IS NOT INTENDED TO BE SUITABLE FOR REUSE BY ANY PERSON, FIRM, CORPORATION, OR ANY OTHERS ON EXTENSIONS OF THIS PROJECT OR FOR ANY USE ON ANY OTHER PROJECT. ANY REUSE WITHOUT WRITTEN VERIFICATION AND ADAPTATION BY THE ENGINEER FOR THE SPECIFIC PURPOSE INTENDED WILL BE AT THE USER'S SOLE RISK AND WITHOUT LIABILITY OR LEGAL EXPOSURE TO THE ENGINEER.

SEAL
REGISTERED PROFESSIONAL ENGINEER
ROBERT A. TAMACCIO
S5607
STRUCTURAL
STATE OF CALIFORNIA
11/17/2021

MISC. ACCESSIBILITY DETAILS (CONT.)
LEASE FLEX. / WAREHOUSE BUILDINGS
FOR
MADERA INDUSTRIAL WHSE, LLC
S. SCHNOOR AVENUE, MADERA, CA

JOB NUMBER 21107
DESIGNED BY RT
DRAWN BY LM
DATE 9/17/2021
SHEET NUMBER G2.1

11/22/2021 2:59:29 PM
G:\Shared drives\DBKOmpany\PROJECTS\20106_WHSE Partners-Fresno, CA\Plans, Calcs & Specs\Arch-Struct (DBKO)\Drawings\Franco Property - Madera\WHSE-BLDGA_2021-09-12.rvt

11B-404 - DOORS, DOORWAYS, AND GATES

11B-402.1 - GENERAL
DOORS, DOORWAYS, AND GATES THAT ARE PART OF AN ACCESSIBLE ROUTE SHALL COMPLY WITH 11B-404.

EXCEPTIONS:
1. DOORS, DOORWAYS, AND GATES DESIGNED TO BE OPERATED ONLY BY SECURITY PERSONNEL SHALL NOT BE REQUIRED TO COMPLY WITH 11B-404.2.7, 11B-404.2.8, 11B-404.2.9, 11B-404.3.2 AND 11B-404.3.4 THROUGH 11B-404.3.7. A SIGN VISIBLE FROM THE APPROACH SIDE COMPLYING WITH 11B-703.5 SHALL BE POSTED STATING "ENTRY RESTRICTED AND CONTROLLED BY SECURITY PERSONNEL".
2. AT DETENTION AND CORR. FACILITIES, DOORS, DOORWAYS, AND GATES DESIGNED TO BE OPERATED ONLY BY SECURITY PERSONNEL SHALL NOT BE REQUIRED TO COMPLY WITH 11B-404.2.7, 11B-404.2.8, 11B-404.2.9, 11B-404.3.2 AND 11B-404.3.4 THROUGH 11B-404.3.7.

11B-404.2 - MANUAL DOORS, DOORWAYS, AND MANUAL GATES
MANUAL DOORS AND DOORWAYS AND MANUAL GATES INTENDED FOR USER PASSAGE SHALL COMPLY WITH 11B-404.2.

11B-404.2.1 - REVOLVING DOORS, GATES, AND TURNSTILES
REVOLVING DOORS, GATES, AND TURNSTILES SHALL NOT BE PART OF AN ACCESSIBLE ROUTE.

11B-404.2.2 - DOUBLE-LEAF DOORS AND GATES
AT LEAST ONE OF THE ACTIVE LEAFS OF DOORWAYS WITH TWO LEAVES SHALL COMPLY WITH 11B-404.2.3 AND 11B404.2.4.

11B-404.2.3 - CLEAR WIDTH
DOOR WIDTHS SHALL PROVIDE A CLEAR WIDTH OF 32 INCHES MINIMUM. CLEAR OPENINGS OF DOORWAYS WITH SWINGING DOORS SHALL BE MEASURED BETWEEN THE FACE OF THE DOOR AND THE STOP, WITH THE DOOR OPEN 90 DEGREES. OPENINGS MORE THAN 24 INCHES DEEP SHALL PROVIDE A CLEAR OPENING OF 36 INCHES MINIMUM. THERE SHALL BE NO PROJECTIONS INTO THE REQUIRED CLEAR OPENING WIDTH LOWER THAN 34 INCHES ABOVE THE FINISHED FLOOR OR GROUND. PROJECTIONS INTO THE CLEAR OPENING WIDTH BETWEEN 34 INCHES AND 80 INCHES ABOVE THE FINISHED FLOOR OR GROUND SHALL NOT EXCEED 4 INCHES.

EXCEPTION:
1. IN ALTERATIONS, A PROJECTION OF 5/8 INCH MAX. INTO THE REQUIRED CLEAR WIDTH SHALL BE PERMITTED FOR THE LATCH SIDE STOP.
2. DOOR CLOSERS AND DOOR STOPS SHALL BE PERMITTED TO BE 78 INCHES ABOVE THE FINISHED FLOOR OR GROUND.

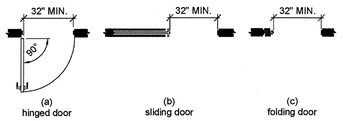

FIG. 11B-404.2.3 - CLEAR WIDTH OF DOORWAYS

11B-404.2.4 - MANEUVERING CLEARANCES
MIN. MANEUVERING CLEARANCES AT DOORS AND GATES SHALL COMPLY WITH 11B-404.2.4. MANEUVERING CLEARANCES SHALL EXTEND THE FULL WIDTH OF THE DOORWAY AND THE REQUIRED LATCH SIDE OR HINGE SIDE CLEARANCE.

11B-404.2.4.1 - SWINGING DOORS AND GATES
SEE FIGURE 11B-404.2.4.1

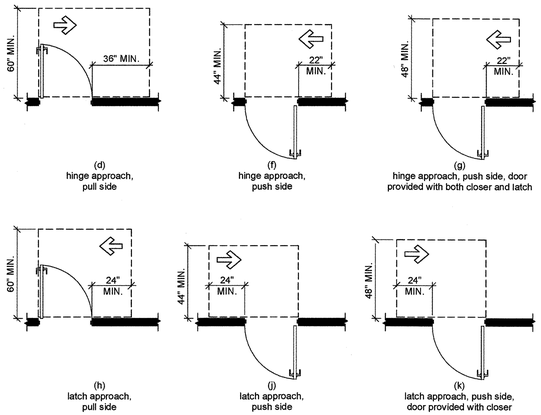

NOTE - FOR FRONT APPROACHES, COMPLY WITH FIGURE 11B-404.2.4.3

FIG. 11B-404.2.4.1 - MANEUVERING CLEARANCES AT MANUAL SWING DOORS AND GATES

11B-404.2.4.2 - DOORWAYS WITHOUT DOORS OR GATES, SLIDING DOORS, AND FOLDING DOORS
SEE FIGURE 11B-404.2.4.2

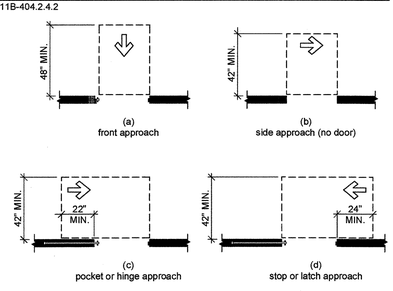

FIG. 11B-404.2.4.2 - MANEUVERING CLEARANCES AT DOORWAYS WITHOUT DOORS, SLIDING DOORS, GATES, AND FOLDING DOORS

11B-404.2.4.3 - RECESSED DOORS AND GATES
SEE FIGURE 11B-404.2.4.3

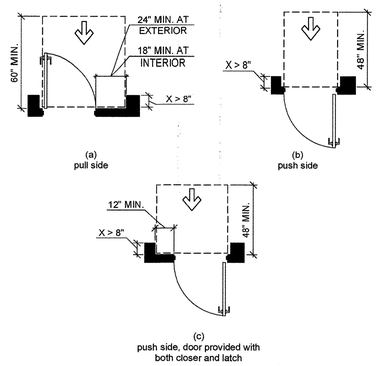

FIG. 11B-404.2.4.3 - MANEUVERING CLEARANCES AT RECESSED DOORS AND GATES

11B-404.2.4.4 - FLOOR OR GROUND SURFACES
FLOOR OR GROUND SURFACE WITHIN REQUIRED MANEUVERING CLEARANCES SHALL COMPLY WITH SECTION 11B-302 (SEE 5/G2.1). CHANGES IN LEVEL ARE NOT PERMITTED.

EXCEPTIONS:
1. SLOPES NOT STEEPER THAN 1:48 SHALL BE PERMITTED.
2. CHANGES IN LEVEL AT THRESHOLDS COMPLYING WITH 11B-404.2.5 SHALL BE PERMITTED.

11B-404.2.5 - THRESHOLDS
THRESHOLDS, IF PROVIDED AT DOORWAYS, SHALL BE 1/2 INCH HIGH MAXIMUM. RAISED THRESHOLDS AND CHANGES IN LEVEL AT DOORWAYS SHALL COMPLY WITH 11B-302 AND 11B-303 PER 5/G2.1

11B-404.2.6 - DOORS IN SERIES AND GATES IN SERIES
THE DISTANCE BETWEEN TWO HINGED OR PIVOTED DOORS IN SERIES AND GATES IN SERIES SHALL BE 48 INCHES MIN. PLUS THE WIDTH OF DOORS OR GATES SWINGING INTO THE SPACE.

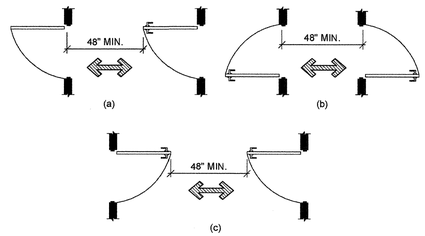

FIG. 11B-404.2.6 - DOORS IN SERIES AND GATES IN SERIES

11B-404.2.7 - DOOR AND GATE HARDWARE
HANDLES, PULLS, LATCHES, LOCKS, AND OTHER OPERABLE PARTS ON DOORS AND GATES SHALL COMPLY WITH SECTION 11B-309.4. OPERABLE PARTS OF SUCH HARDWARE SHALL BE 34 INCHES MIN. AND 44 INCHES MAX. ABOVE THE FINISHED FLOOR OR GROUND. WHERE SLIDING DOORS ARE IN THE FULLY OPEN POSITION, OPERATING HARDWARE SHALL BE EXPOSED AND USABLE FROM BOTH SIDES.

EXCEPTIONS:
1. EXISTING LOCKS SHALL BE PERMITTED IN ANY LOCATION AT EXISTING GLAZED DOORS WITHOUT STILES, EXISTING OVERHEAD ROLLING DOORS OR GRILLES, AND SIMILAR EXISTING DOORS OR GRILLES THAT ARE DESIGNED WITH LOCKS THAT ARE ACTIVATED ONLY AT THE TOP OR BOTTOM RAIL.
2. ACCESS GATES IN BARRIER WALLS AND FENCES PROTECTING POOLS, SPAS, AND HOT TUBS SHALL BE PERMITTED TO HAVE OPERABLE PARTS OF THE RELEASE OF LATCH ON SELF-LATCHING DEVICES AT 54 INCHES MAX. ABOVE THE FINISHED FLOOR OR GROUND PROVIDED THAT SELF-LATCHING DEVICES ARE NOT ALSO SELF-LOCKING DEVICES AND OPERATED BY MEANS OF KEY, ELECTRONIC OPENER, OR INTEGRAL COMBINATION LOCK.

11B-404.2.8.1 - CLOSING SPEED (DOOR AND GATE CLOSERS)
DOOR CLOSERS AND GATE CLOSERS SHALL BE ADJUSTED SO THAT FROM AN OPEN POSITION OF 90 DEGREES, THE TIME REQUIRED TO MOVE THE DOOR TO A POSITION OF 12 DEGREES FROM THE LATCH IS 5 SECONDS MIN.

11B-404.2.8.2 - CLOSING SPEED (SPRING HINGES)
DOOR AND GATE SPRING HINGES SHALL BE ADJUSTED SO THAT FROM THE OPEN POSITION OF 70 DEGREES, THE DOOR OR GATE SHALL MOVE TO THE CLOSED POSITION IN 1.5 SECONDS MIN.

11B-404.2.9 - DOOR AND GATE OPENING FORCE
THE FORCE FOR PUSHING OR PULLING OPEN A DOOR OR GATE SHALL BE AS FOLLOWED:

1. INTERIOR HINGED DOORS AND GATES: 5 POUNDS MAX.
2. SLIDING OR FOLDING DOORS: 5 POUNDS MAX.
3. REQUIRED FIRE DOORS: THE MIN. OPENING FORCE ALLOWABLE BY THE APPROPRIATE ADMINISTRATIVE AUTHORITY, NOT TO EXCEED 15 POUNDS.
4. EXTERIOR HINGED DOORS: 5 POUNDS MAX.

THESE FORCES DO NOT APPLY TO THE FORCE REQUIRED TO RETRACT LATCH BOLTS OR DISENGAGE OTHER DEVICES THAT HOLD THE DOOR OR GATE IN A CLOSED POSITION.

11B-404.2.11 - VISION LIGHTS
DOORS, GATES, AND SIDE LIGHTS ADJACENT TO DOORS OR GATES, CONTAINING ONE OR MORE GLAZING PANELS THAT PERMIT VIEWING THROUGH THE PANELS SHALL HAVE THE BOTTOM OF AT LEAST ONE GLAZED PANEL LOCATED 43 INCHES MAX. ABOVE THE FINSHED FLOOR.

EXCEPTION: GLAZING PANELS WITH THE LOWEST PART MORE THAN 66 INCHES FORM THE FINISHED FLOOR OR GROUND SHALL NOT BE REQUIRED TO COMPLY WITH 11B404.2.11.

9 / G2.2 ACCESSIBLE DOORS, DOORWAYS, AND GATES
1/4" = 1'-0"

2019CBC
City of Madera
Building Department
The approval of these plans does not prevent the City of Madera from requiring correction of errors or omissions in the plans, specifications or construction. Subject to field inspections and approvals of other agencies and departments.
APPROVED
By:
Date: MAR 0 3 2022

DBKO DESIGN-BUILD
UCF#705269

WHSE PARTNERS

DATE	REVISION	BY

ANY INFORMATION, OR DATA ON THIS DRAWING IS NOT INTENDED TO BE SUITABLE FOR REUSE BY ANY PERSON, FIRM, CORPORATION, OR GOVERNMENTAL AGENCY FOR ANY OTHER PURPOSE OR PROJECT THAN THE SPECIFIC PROJECT FOR WHICH IT WAS PREPARED BY OR FOR, AND ANY REUSE WITHOUT WRITTEN VERIFICATION AND ADAPTATION BY THE ENGINEER FOR THE SPECIFIC PURPOSE INTENDED WILL BE AT THE USER'S SOLE RISK AND WITHOUT LIABILITY OR LEGAL EXPOSURE TO THE ENGINEER.

SEAL
REGISTERED PROFESSIONAL ENGINEER
ROBERT A. TAMACCIO
S5607
STRUCTURAL
STATE OF CALIFORNIA
11/17/2021

MISC. ACCESSIBLITY DETAILS (CONT.)

LEASE FLEX. / WAREHOUSE BUILDINGS
FOR
MADERA INDUSTRIAL WHSE, LLC
S. SCHNOOR AVENUE, MADERA, CA

JOB NUMBER	21107
DESIGNED BY	RT
DRAWN BY	LM
DATE	9/17/2021
SHEET NUMBER	G2.2

G:\Shared drives\DBKO\Copy\PRO JECTS\2019_WJ\WSE Partners-Freeno, CA\Plans, Calcs & Specs\4th Street (DBKO)\Drawings\Fresno Property - Master\WHSE-BLDG\A_2021-09-13.rvt 11/22/2021 3:59:30 PM

2019 CALIFORNIA GREEN BUILDING STANDARDS CODE

NONRESIDENTIAL MANDATORY MEASURES, SHEET 1 (July 2021, Includes July 2021 Supplement)

AIA California

Y = YES
N/A = NOT APPLICABLE
RESPON. PARTY = RESPONSIBLE PARTY (ie: ARCHITECT, ENGINEER, OWNER, CONTRACTOR, INSPECTOR ETC.)

Y | N/A | RESPON. PARTY

CHAPTER 3
GREEN BUILDING
SECTION 301 GENERAL

301.1 SCOPE. Buildings shall be designed to include the green building measures specified as mandatory in the application checklists contained in this code. Voluntary green building measures are also included in the application checklists and may be included in the design and construction of structures covered by this code, but are not required unless adopted by a city, county, or city and county as specified in Section 101.7.

301.3 NONRESIDENTIAL ADDITIONS AND ALTERATIONS. [BSC-CG] The provisions of individual sections of Chapter 5 apply to newly constructed buildings, building additions of 1,000 square feet or greater, and/or building alterations with a permit valuation of $200,000 or above (for occupancies within the authority of California Building Standards Commission). Code sections relevant to additions and alterations shall only apply to the portions of the building being added or altered within the scope of the permitted work.

A code section will be designated by a banner to indicate where the code section only applies to newly constructed buildings [N] or to additions and/or alterations [A]. When the code section applies to both, no banner will be used.

301.3.1 Nonresidential additions and alterations that cause updates to plumbing fixtures only:

Note: On and after January 1, 2014, certain commercial real property, as defined in Civil Code Section 1101.3, shall have its noncompliant plumbing fixtures replaced with appropriate water-conserving plumbing fixtures under specific circumstances. See Civil Code Section 1101.1 *et seq.* for definitions, types of commercial real property affected, effective dates, circumstances necessitating replacement of noncompliant plumbing fixtures, and duties and responsibilities for ensuring compliance.

301.3.2 Waste Diversion. The requirements of Section 5.408 shall be required for additions and alterations whenever a permit is required for work.

301.4 PUBLIC SCHOOLS AND COMMUNITY COLLEGES. (see GBSC)
301.5 HEALTH FACILITIES. (see GBSC)

SECTION 302 MIXED OCCUPANCY BUILDINGS

302.1 MIXED OCCUPANCY BUILDINGS. In mixed occupancy buildings, each portion of a building shall comply with the specific green building measures applicable to each specific occupancy.

SECTION 303 PHASED PROJECTS

303.1 PHASED PROJECTS. For shell buildings and others constructed for future tenant improvements, only those code measures relevant to the building components and systems considered to be new construction (or newly constructed) shall apply.

303.1.1 Initial Tenant Improvements. The provisions of this code shall apply only to the initial tenant improvements to a project. Subsequent tenant improvements shall comply with the scoping provisions in Section 301.3 non-residential additions and alterations.

ABBREVIATION DEFINITIONS:

HCD	Department of Housing and Community Development
BSC	California Building Standards Commission
DSA-SS	Division of the State Architect, Structural Safety
OSHPD	Office of Statewide Health Planning and Development
LR	Low Rise
HR	High Rise
AA	Additions and Alterations
N	New

CHAPTER 5
NONRESIDENTIAL MANDATORY MEASURES

DIVISION 5.1 PLANNING AND DESIGN

SECTION 5.101 GENERAL
5.101.1 SCOPE
The provisions of this chapter outline planning, design and development methods that include environmentally responsible site selection, building design, building siting and development to protect, restore and enhance the environmental quality of the site and respect the integrity of adjacent properties.

SECTION 5.102 DEFINITIONS
5.102.1 DEFINITIONS
The following terms are defined in Chapter 2 *(and are included here for reference)*

CUTOFF LUMINAIRES. Luminaires whose light distribution is such that the candela per 1000 lamp lumens does not numerically exceed 25 (2.5 percent) at an angle of 90 degrees above nadir, and 100 (10 percent) at a vertical angle of 80 degrees above nadir. This applies to all lateral angles around the luminaire.

LOW-EMITTING AND FUEL EFFICIENT VEHICLES.
Eligible vehicles are limited to the following:

1. Zero emission vehicle (ZEV), including neighborhood electric vehicles (NEV), partial zero emission vehicle (PZEV), advanced technology PZEV (AT ZEV) or CNG fueled (original equipment manufacturer only) regulated under Health and Safety Code section 43800 and CCR, Title 13, Sections 1961 and 1962.
2. High-efficiency vehicles, regulated by U.S. EPA, bearing High-Occupancy Vehicle (HOV) car pool lane stickers issued by the Department of Motor Vehicles.

NEIGHBORHOOD ELECTRIC VEHICLE (NEV). A motor vehicle that meets the definition of "low-speed vehicle" either in Section 385.5 of the Vehicle Code or in 49CFR571.500 (as it existed on July 1, 2000), and is certified to zero-emission vehicle standards.

TENANT-OCCUPANTS. Building occupants who inhabit a building during its normal hours of operation as permanent occupants, such as employees, as distinguished from customers and other transient visitors.

VANPOOL VEHICLE. Eligible vehicles are limited to any motor vehicle, other than a motortruck or truck tractor, designed for carrying more than 10 but not more than 15 persons including the driver, which is maintained and used primarily for the nonprofit work-related transportation of adults for the purpose of ridesharing.

Note: Source: Vehicle Code, Division 1, Section 668

ZEV. Any vehicle certified to zero-emission standards.

☐ ☒

SECTION 5.106 SITE DEVELOPMENT
5.106.1 STORM WATER POLLUTION PREVENTION FOR PROJECTS THAT DISTURB LESS THAN ONE ACRE OF LAND. Newly constructed projects and additions which disturb less than one acre of land, and are not part of a larger common plan of development or sale, shall prevent the pollution of storm water runoff from the construction activities through one or more of the following measures:

5.106.1.1 Local ordinance. Comply with a lawfully enacted storm water management and/or erosion control ordinance.

5.106.1.2 Best Management Practices (BMPs). Prevent the loss of soil through wind or water erosion by implementing an effective combination of erosion and sediment control and good housekeeping BMPs.

1. Soil loss BMPs that should be considered for implementation as appropriate for each project include, but are not limited to, the following:
   a. Scheduling construction activity during dry weather, when possible.
   b. Preservation of natural features, vegetation, soil, and buffers around surface waters.
   c. Drainage swales or lined ditches to control stormwater flow.
   d. Mulching or hydroseeding to stabilize disturbed soils.
   e. Erosion control to protect slopes.
   f. Protection of storm drain inlets (gravel bags or catch basin inserts).
   g. Perimeter sediment control (perimeter silt fence, fiber rolls).
   h. Sediment trap or sediment basin to retain sediment on site.
   i. Stabilized construction exits.
   j. Wind erosion control.
   k. Other soil loss BMPs acceptable to the enforcing agency.
2. Good housekeeping BMPs to manage construction equipment, materials, non-stormwater discharges and wastes that should be considered for implementation as appropriate for each project include, but are not limited to, the following:
   a. Dewatering activities.
   b. Material handling and waste management.
   c. Building materials stockpile management.
   d. Management of washout areas (concrete, paints, stucco, etc.).
   e. Control of vehicle/equipment fueling to contractor's staging area.
   f. Vehicle and equipment cleaning performed off site.
   g. Spill prevention and control.
   h. Other housekeeping BMPs acceptable to the enforcing agency.

☒ ☐ PER CIVIL PLANS

5.106.2 STORMWATER POLLUTION PREVENTION FOR PROJECTS THAT DISTURB ONE OR MORE ACRES OF LAND. Comply with all lawfully enacted stormwater discharge regulations for projects that (1) disturb one acre or more of land, or (2) disturb less than one acre of land but are part of a larger common plan of development sale.

Note: Projects that (1) disturb one acre or more of land, or (2) disturb less than one acre of land but are part of the larger common plan of development or sale must comply with the post-construction requirements detailed in the applicable National Pollutant Discharge Elimination System (NPDES) General permit for Stormwater Discharges Associated with Construction and Land Disturbance Activities issued by the State Water Resources Control Board or the Lahontan Regional Water Quality Control Board (for projects in the Lake Tahoe Hydrologic Unit).

The NPDES permits require postconstruction runoff (post-project hydrology) to match the preconstruction runoff (pre-project hydrology) with the installation of postconstruction stormwater management measures. The NPDES permits emphasize runoff reduction through on-site stormwater use, interception, evapotranspiration, and infiltration through nonstructural controls, such as Low Impact Development (LID) practices, and conversation design measures. Stormwater volume that cannot be addressed using nonstructural practices is required to be captured in structural practices and be approved by the enforcing agency.

Refer to the current applicable permits on the State Water Resources Control Board website at: www.waterboards.ca.gov/constructionstormwater. Consideration to the stormwater runoff management measures should be given during the initial design process for appropriate integration into site development.

☒ ☐ BIKE PARKING PROVIDED PER SHEET A1.0

5.106.4 BICYCLE PARKING. For buildings within the authority of California Building Standards Commission as specified in Section 103, comply with Section 5.106.4.1. For buildings within the authority of the Division of the State Architect pursuant to Section 105, comply with Section 5.106.4.2

5.106.4.1 Bicycle parking. [BSC-CG] Comply with Sections 5.106.4.1.1 and 5.106.4.1.2; or meet the applicable local ordinance, whichever is stricter.

5.106.4.1.1 Short-term bicycle parking. If the new project or an addition or alteration is anticipated to generate visitor traffic, provide permanently anchored bicycle racks within 200 feet of the visitors' entrance, readily visible to passers-by, for 5% of new visitor motorized vehicle parking spaces being added, with a minimum of one two-bike capacity rack.
Exception: Additions or alterations which add nine or less visitor vehicular parking spaces.

5.106.4.1.2 Long-term bicycle parking. For new buildings with tenant spaces that have 10 or more tenant-occupants, provide secure bicycle parking for 5 percent of the tenant-occupant vehicular parking spaces with a minimum of one bicycle parking facility.

5.106.4.1.3 For additions or alterations that add 10 or more tenant-occupant vehicular parking spaces, provide secure bicycle parking for 5 percent of the tenant vehicular parking spaces being added, with a minimum of one bicycle parking facility.

5.106.4.1.4 For new shell buildings in phased projects provide secure bicycle parking for 5 percent of the anticipated tenant-occupant vehicular parking spaces with a minimum of one bicycle parking facility.

5.106.4.1.5 Acceptable bicycle parking facility for Sections 5.106.4.1.2, 5.106.4.1.3, and 5.106.4.1.4 shall be convenient from the street and shall meet one of the following:

1. Covered, lockable enclosures with permanently anchored racks for bicycles;
2. Lockable bicycle rooms with permanently anchored racks; or
3. Lockable, permanently anchored bicycle lockers.

Note: Additional information on recommended bicycle accommodations may be obtained from Sacramento Area Bicycle Advocates.

5.106.4.2 Bicycle parking. [DSA-SS] For public schools and community colleges, comply with Sections 5.106.4.2.1 and 5.106.4.2.2

5.106.4.2.1 Student bicycle parking. Provide permanently anchored bicycle racks conveniently accessed with a minimum of four two-bike capacity racks per new building.
5.106.4.2.2 Staff bicycle parking. Provide permanent, secure bicycle parking conveniently accessed with a minimum of two staff bicycle parking spaces per new building. Acceptable bicycle parking facilities shall be convenient from the street or staff parking area and shall meet one of the following:

1. Covered, lockable enclosures with permanently anchored racks for bicycles;
2. Lockable bicycle rooms with permanently anchored racks; or
3. Lockable, permanently anchored bicycle lockers.

☒ ☐ CLEAN AIR PARKING PROVIDED PER SHEET A1.0 NOTE 3.

5.106.5.2 DESIGNATED PARKING FOR CLEAN AIR VEHICLES. In new projects or additions or alterations that add 10 or more vehicular parking spaces, provide designated parking for any combination of low-emitting, fuel-efficient and carpool/van pool vehicles as follows:

TABLE 5.106.5.2 - PARKING

TOTAL NUMBER OF PARKING SPACES	NUMBER OF REQUIRED SPACES
0-9	0
10-25	3
25-50	6
51-75	9
76-100	12
101-150	18
151-200	21
201 AND OVER	AT LEAST 12% OF TOTAL[1]

1.Calculation for spaces shall be rounded up to the nearest whole number.

Note: Designated parking for clean air vehicles shall count towards the total parking spaces required by the local enforcing agencies.

5.106.5.2.1 - Parking stall marking. Paint, in the paint used for stall striping, the following characters such that the lower edge of the last word aligns with the end of the stall striping and is visible beneath a parked vehicle: CLEAN AIR / VAN POOL / EV

Note: Vehicles bearing Clean Air Vehicle stickers from expired HOV lane programs may be considered eligible for designated parking spaces.

☒ ☐ FUTURE PROVISIONS SHOWN ON THE ELECTRICAL PLANS FOR 13 OF THE 18 CLEAN AIR VEHICLE STALLS PROVIDED.

5.106.5.3 Electric vehicle (EV) charging. [N] Construction shall comply with Section 5.106.5.3.1 or Section 5.106.5.3.2 to facilitate future installation of electric vehicle supply equipment (EVSE). When EVSE(s) is/are installed, it shall be in accordance with the California Building Code, the California Electrical Code and as follows:

5.106.5.3.1 Single charging space requirements. [N] When only a single charging space is required per Table 5.106.5.3.3, a raceway is required to be installed at the time of construction and shall be installed in accordance with the California Electrical Code. Construction plans and specifications shall include, but are not limited to, the following:

1. The type and location of the EVSE.
2. A listed raceway capable of accommodating a 208/240 -volt dedicated branch circuit.
3. The raceway shall not be less than trade size 1".
4. The raceway shall originate at a service panel or a subpanel serving the area, and shall terminate in close proximity to the proposed location of the charging equipment and listed suitable cabinet, box, enclosure or equivalent.
5. The service panel or subpanel shall have sufficient capacity to accommodate a minimum 40-ampere dedicated branch circuit for the future installation of the EVSE.

5.106.5.3.2 Multiple charging space requirements. [N] When multiple charging spaces are required per Table 5.106.5.3.3 raceway(s) is/are required to be installed at the time of construction and shall be installed in accordance with the California Electrical Code. Construction plans and specifications shall include, but are not limited to, the following:

1. The type and location of the EVSE.
2. The raceway(s) shall originate at a service panel or a subpanel(s) serving the area, and shall terminate in close proximity to the proposed location of the charging equipment and into listed suitable cabinet(s), box(es), enclosure(s) or equivalent.
3. Plan design shall be based upon 40-ampere minimum branch circuits.
4. Electrical calculations shall substantiate the design of the electrical system, to include the rating of equipment and any on-site distribution transformers and have sufficient capacity to simultaneously charge all required EVs at its full rated amperage.
5. The service panel or subpanel(s) shall have sufficient capacity to accommodate the required number of dedicated branch circuit(s) for the future installation of the EVSE.

5.106.5.3.3 EV charging space calculations. [N] Table 5.106.5.3.3 shall be used to determine if single or multiple charging space requirements apply for the future installation of EVSE.

Exceptions: On a case-by-case basis where the local enforcing agency has determined EV charging and infrastructure is not feasible based upon one or more of the following conditions:

1. Where there is insufficient electrical supply.
2. Where there is evidence suitable to the local enforcing agency substantiating that additional local utility infrastructure design requirements, directly related to the implementation of Section 5.106.5.3, may adversely impact the construction cost of the project.

TABLE 5.106.5.3.3

TOTAL NUMBER OF PARKING SPACES	NUMBER OF REQUIRED SPACES
0-9	0
10-25	2
26-50	4
51-75	7
76-100	9
101-150	13
151-200	18
201 AND OVER	10% of total[1]

1. Calculation for spaces shall be rounded up to the nearest whole number.

5.106.5.3.4 [N] Identification. The service panel or subpanel(s) circuit directory shall identify the reserved overcurrent protective device space(s) for future EV charging as "EV CAPABLE". The raceway termination location shall be permanently and visibly marked as "EV CAPABLE".

5.106.5.3.5 [N] Future charging spaces qualify as designated parking as described in Section 5.106.5.2 Designated parking for clean air vehicles.

Note: Future electric vehicle charging spaces shall count towards the total parking spaces required by the local enforcing agencies.

☒ ☐ SEE ELECTRICAL PLANS FOR OUTDOOR LIGHTING SCHEDULE.

5.106.8 LIGHT POLLUTION REDUCTION. [N]. I Outdoor lighting systems shall be designed and installed to comply with the following:

1. The minimum requirements in the California Energy Code for Lighting Zones 0-4 as defined in Chapter 10, Section 10-114 of the California Administrative Code; and
2. Backlight (B) ratings as defined in IES TM-15-11 (shown in Table A-1 in Chapter 8);
3. Uplight and Glare ratings as defined in California Energy Code (shown in Tables 130.2-A and 130.2-B in Chapter 8) and
4. Allowable BUG ratings not exceeding those shown in Table 5.106.8, [N] or Comply with a local ordinance lawfully enacted pursuant to Section 101.7, whichever is more stringent.

Exceptions: [N]

1. Luminaires that qualify as exceptions in Sections 130.2 (b) and 140.7 of the California Energy Code.
2. Emergency lighting.
3. Building facade meeting the requirements in Table 140.7-B of the California Energy Code, Part 6.
4. Custom lighting features as allowed by the local enforcing agency, as permitted by Section 101.8 Alternate materials, designs and methods of construction.
5. Luminaires with less than 6,200 initial luminaire lumens.

TABLE 5.106.8 [N] MAXIMUM ALLOWABLE BACKLIGHT, UPLIGHT AND GLARE (BUG) RATINGS [1,2]

ALLOWABLE RATING	LIGHTING ZONE LZ0	LIGHTING ZONE LZ1	LIGHTING ZONE LZ2	LIGHTING ZONE LZ3	LIGHTING ZONE LZ4
MAXIMUM ALLOWABLE BACKLIGHT RATING [3]					
Luminaire greater than 2 mounting heights (MH) from property line	N/A	No Limit	No Limit	No Limit	No Limit
Luminaire back hemisphere is 1-2 MH from property line	N/A	B2	B3	B4	B4
Luminaire back hemisphere is 0.5-1 MH from property line	N/A	B1	B2	B3	B3
Luminaire back hemisphere is less than 0.5 MH from property line	N/A	B0	B0	B1	B2
MAXIMUM ALLOWABLE UPLIGHT RATING (U)					
For area lighting [3]	N/A	U0	U0	U0	U0
For all other outdoor lighting,including decorative luminaires	N/A	U1	U2	U3	UR
MAXIMUM ALLOWABLE GLARE RATING [5] (G)					
Luminaire greater than 2 MH from property line	N/A	G1	G2	G3	G4
Luminaire front hemisphere is 1-2 MH from property line	N/A	G0	G1	G1	G2
Luminaire front hemisphere is 0.5-1 MH from property line	N/A	G0	G0	G1	G1
Luminaire back hemisphere is less than 0.5 MH from property line	N/A	G0	G0	G0	G1

1. IESNA Lighting Zones 0 and 5 are not applicable; refer to Lighting Zones as defined in the *California Energy Code* and Chapter 10 of the *California Administrative Code*.

2. For property lines that abut public walkways, bikeways, plazas and parking lots, the property line may be considered to be 5 feet beyond the actual property line for purpose of determining compliance with this section. For property lines that abut public roadways and public transit corridors, the property line may be considered to be the centerline of the public roadway or public transit corridor for the purpose of determining compliance with this section.

3. General lighting luminaires in areas such as outdoor parking, sales or storage lots shall meet these reduced ratings. Decorative luminaries located in these areas shall meet *U*-value limits for "all other outdoor lighting"

5.106.8.1 Facing- Backlight
Luminaries within 2MH of a property line shall be oriented so that the nearest property line is behind the fixture, and shall comply with the backlight rating specified in Table 5.106.8 based on the lighting zone and distance to the nearest point of that property line.
Exception: Corners. If two property lines (or two segments of the same property line) have equidistant point to the luminaire, then the luminaire may be oriented so that the intersection of the two lines (the corner) is directly behind the luminaire. The luminaire shall still use the distance to the nearest points(s) on the property lines to determine the required backlight rating.

5.106.8.2 Facing-Glare.
For luminaires covered by 5.106.8.1, if a property line also exists within or extends into the front hemisphere within 2MH of the luminaire then the luminaire shall comply with the more stringent glare rating specified in Table 5.106.8 based on the lighting zone and distance to the nearest point on the nearest property line within the front hemisphere.

Note: [N]
1.See also *California Building Code*, Chapter 12, Section 1205.6 for college campus lighting requirements for parking facilities and walkways.
2.Refer to Chapter 8 (Compliance Forms, Worksheets and Reference Material) for IES TM-15-11 Table A-1, *California Energy Code* Tables 130.2-A and 130.2-B.
3. Refer to the *California Building Code* for requirements for additions and alterations.

☒ ☐ SEE CIVIL GRADING PLAN

5.106.10 GRADING AND PAVING. Construction plans shall indicate how site grading or a drainage system will manage all surface water flows to keep water from entering buildings. Examples of methods to manage surface water include, but are not limited to, the following:

1. Swales.
2. Water collection and disposal systems.
3. French drains.
4. Water retention gardens.
5. Other water measures which keep surface water away from buildings and aid in groundwater recharge.
   Exception: Additions and alterations not altering the drainage path.

☒ ☐ SEE LANDSCAPINNG PLANS

5.106.12 SHADE TREES [DSA-SS]. Shade Trees shall be planted to comply with Sections 5.106.12.1, 5.106.12.2, and 5.106.12.3. Percentages shown shall be measured at noon on the summer solstice. Landscape irrigation necessary to establish and maintain tree health shall comply with Section 5.304.6.

5.106.12.1 Surface parking areas. Shade tree plantings, minimum #10 container size or equal, shall be installed to provide shade over 50 percent of the parking area within 15 years.

Exceptions: The surface parking area covered by solar photovoltaic shade structures, or shade structures, with roofing materials that comply with Table A5.106.11.2.2 in Appendix A5, are not included in the total area calculations.

5.106.12.2 Landscape areas. Shade tress plantings, minimum #10 container size or equal shall be installed to provide shade of 20% of the landscape area within 15 years.

Exceptions: Playfields for organized sport activity are not included in the total area calculation.

5.106.12.3. Hardscape areas. Shade tree plantings, minimum #10 container size or equal shall be installed to provide shade over 20 percent of the hardscape area within 15 years.

Exceptions: Walks, hardscape areas covered by solar photovoltaic shade structures, and hardscape areas covered by shade structures with roofing materials that comply with Table A5.106.11.2.2 in Appendix A5, are not included in the total area calculation.

DIVISION 5.2 ENERGY EFFICIENCY

SECTION 5.201 GENERAL
5.201.1 Scope [BSC-CG]. ***California Energy Code [DSA-SS].*** For the purposes of mandatory energy efficiency standards in this code, the California Energy Commission will continue to adopt mandatory building standards.

DIVISION 5.3 WATER EFFICIENCY AND CONSERVATION

SECTION 5.301 GENERAL
5.301.1 Scope. The provisions of this chapter shall establish the means of conserving water use indoors, outdoors and in wastewater conveyance.

SECTION 5.302 DEFINITIONS
5.302.1 Definitions. The following terms are defined in Chapter 2 *(and are included here for reference)*

EVAPOTRANSPIRATION ADJUSTMENT FACTOR (ETAF) [DSA-SS]. An adjustment factor when applied to reference evapotranspiration that adjusts for plant factors and irrigation efficiency, which ae two major influences on the amount of water that needs to be applied to the landscape.

FOOTPRINT AREA [DSA-SS]. The total area of the furthest exterior wall of the structure projected to natural grade, not including exterior areas such as stairs, covered walkways, patios and decks.

METERING FAUCET. A self-closing faucet that dispenses a specific volume of water for each actuation cycle. The volume or cycle duration can be fixed or adjustable.

GRAYWATER. Pursuant to Health and Safety Code Section 17922.12, "graywater" means untreated wastewater that has not been contaminated by any toilet discharge, has not been affected by infectious, contaminated, or unhealthy bodily wastes, and does not present a threat from contamination by unhealthful processing, manufacturing, or operating wastes. "Graywater" includes, but is not limited to wastewater from bathtubs, showers, bathroom washbasins, clothes washing machines and laundry tubs, but does not include waste water from kitchen sinks or dishwashers.

MODEL WATER EFFICIENT LANDSCAPE ORDINANCE (MWELO). The California ordinance regulating landscape design, installation and maintenance practices that will ensure commercial, multifamily and other developer installed landscapes greater than 2500 square feet meet an irrigation water budget developed based on landscaped area and climatological parameters.

MODEL WATER EFFICIENT LANDSCAPE ORDINANCE (MWELO). [HCD] The California model ordinance (California Code of Regulations, Title 23, Division 2, Chapter 2.7), regulating landscape design, installation and maintenance practices. Local agencies are required to adopt the updated MWELO, or adopt a local ordinance at least as effective as the MWELO.

POTABLE WATER. Water that is drinkable and meets the U.S. Environmental Protection Agency (EPA) Drinking Water Standards. See definition in the California Plumbing Code, Part 5.

POTABLE WATER. [HCD] Water that is satisfactory for drinking, culinary, and domestic purposes, and meets the U.S. Environmental Protection Agency (EPA) Drinking Water Standards and the requirements of the Health Authority Having Jurisdiction.

RECYCLED WATER. Water which, as a result of treatment of waste, is suitable for a direct beneficial use or a controlled use that would not otherwise occur [Water Code Section 13050 (n)]. Simply put, recycled water is water treated to remove waste matter attaining a quality that is suitable to use the water again.

SUBMETER. [HCD 1] A secondary device beyond a meter that measures water consumption of an individual rental unit within a multiunit residential structure or mixed-use residential and commercial structure. (See Civic Code Section 1954.202 (g) and Water code Section 517 for additional details.)

WATER BUDGET. Is the estimated total landscape irrigation water use which shall not exceed the maximum applied water allowance calculated in accordance with the Department of Water Resources Model Efficient Landscape Ordinance (MWELO).

☐ ☒

SECTION 5.303 INDOOR WATER USE
5.303.1 METERS. Separate submeters or metering devices shall be installed for the uses described in Sections 503.1.1 and 503.1.2.

5.303.1.1 Buildings in excess of 50,000 square feet. Separate submeters shall be installed as follows:

1. For each individual leased, rented or other tenant space within the building projected to consume more than 100 gal/day (380 L/day), including, but not limited to, spaces used for laundry or cleaners, restaurant or food service, medical or dental office, laboratory, or beauty salon or barber shop.
2. Where separate submeters for individual building tenants are unfeasible, for water supplied to the following subsystems:
   a. Makeup water for cooling towers where flow through is greater than 500 gpm (30 L/s).
   b. Makeup water for evaporative coolers greater than 6 gpm (0.04 L/s).
   c. Steam and hot water boilers with energy input more than 500,000 Btu/h (147 kW).

5.303.1.2 Excess consumption. A separate submeter or metering device shall be provided for any tenant within a new building or within an addition that is projected to consume more than 1,000 gal/day.

☒ ☐ SEE P1.0 FOR PLUMBING FIXTURE SCHEDULE

5.303.3 WATER CONSERVING PLUMBING FIXTURES AND FITTINGS. Plumbing fixtures (water closets and urinals) and fittings (faucets and showerheads) shall comply with the following:

5.303.3.1 Water Closets. The effective flush volume of all water closets shall not exceed 1.28 gallons per flush. Tank-type water closets shall be certified to the performance criteria of the U.S. EPA WaterSense Specification for Tank-Type toilets.

Note: The effective flush volume of dual flush toilets is defined as the composite, average flush volume of two reduced flushes and one full flush.

5.303.3.2 Urinals.
5.303.3.2.1 Wall-mounted Urinals. The effective flush volume of wall-mounted urinals shall not exceed 0.125 gallons per flush.

5.303.3.2.2 Floor-mounted Urinals. The effective flush volume of floor-mounted or other urinals shall not exceed 0.5 gallons per flush.

5.303.3.3 Showerheads. [BSC-CG]
5.303.3.3.1 Single showerhead. Showerheads shall have a maximum flow rate of not more than 1.8 gallons per minute at 80 psi. Showerheads shall be certified to the performance criteria of the U.S. EPA WaterSense Specification for Showerheads.

5.303.3.3.2 Multiple showerheads serving one shower. When a shower is served by more than one showerhead, the combined flow rate of all the showerheads and/or other shower outlets controlled by a single valve shall not exceed 1.8 gallons per minute at 80 psi, or the shower shall be designed to allow only one shower outlet to be in operation at a time.
Note: A hand-held shower shall be considered a showerhead.

2019CBC City of Madera Building Department
APPROVED
Date: MAR 0 3 2022

DBKO DESIGN BUILD
LIC#1032283

WHSE PARTNERS

BY | REVISION | DATE

ANY INFORMATION OR DATA ON THIS DRAWING IS NOT INTENDED TO BE SUITABLE FOR REUSE BY ANY PERSON, FIRM, CORPORATION, OR ANY OTHERS ON EXTENSIONS OF THIS PROJECT OR FOR ANY USE ON ANY OTHER PROJECT. ANY REUSE WITHOUT WRITTEN VERIFICATION AND ADAPTATION BY THE ENGINEER FOR THE SPECIFIC PURPOSE INTENDED WILL BE AT THE USER'S SOLE RISK AND WITHOUT LIABILITY OR LEGAL EXPOSURE TO THE ENGINEER.

SEAL
REGISTERED PROFESSIONAL ENGINEER ROBERT A. TAMACCIO S5607 STRUCTURAL STATE OF CALIFORNIA
11/17/2021

CALGREEN (SHEET 1 OF 3)
LEASE FLEX. / WAREHOUSE BUILDINGS
FOR
MADERA INDUSTRIAL WHSE, LLC
S. SCHNOOR AVENUE, MADERA, CA

JOB NUMBER 21107
DESIGNED BY RT
DRAWN BY CD
DATE 11/17/2021
SHEET NUMBER
G3.0

11/22/2021 2:59:32 PM
G:\Shared drives\DBKOmpany\PROJECTS\20106_WHSE Partners-Fresno, CA\Plans, Calcs & Specs\Arch-Struct (DBKO)\Drawings\Franco Property - Madera\WHSE-BLDGA_2021-09-12.rvt

2019 CALIFORNIA GREEN BUILDING STANDARDS CODE

NONRESIDENTIAL MANDATORY MEASURES, SHEET 1 (July 2021, Includes July 2021 Supplement)

AIA California

Y	=	YES
N/A	=	NOT APPLICABLE
RESPON. PARTY	=	RESPONSIBLE PARTY (ie: ARCHITECT, ENGINEER, OWNER, CONTRACTOR, INSPECTOR ETC.)

Y | N/A | RESPON. PARTY

5.303.3.4 Faucets and fountains.

5.303.3.4.1 Nonresidential Lavatory faucets. Lavatory faucets shall have a maximum flow rate of not more than 0.5 gallons per minute at 60 psi.

5.303.3.4.2 Kitchen faucets. Kitchen faucets shall have a maximum flow rate of not more than 1.8 gallons per minute at 60 psi. Kitchen faucets may temporarily increase the flow above the maximum rate, but not to exceed 2.2 gallons per minute at 60 psi, and must default to a maximum flow rate of 1.8 gallons per minute at 60 psi.

5.303.3.4.3 Wash fountains. Wash fountains shall have a maximum flow rate of not more than1.8 gallons per minute/20 [rim space (inches) at 60 psi].

5.303.3.4.4 Metering faucets. Metering faucets shall not deliver more than 0.20 gallons per cycle.

5.303.3.4.5 Metering faucets for wash fountains. Metering faucets for wash fountains shall have a maximum flow rate of not more than 0.20 gallons per minute/20 [rim space (inches) at 60 psi].

Note: Where complying faucets are unavailable, aerators or other means may be used to achieve reduction.

5.303.3.4.6 Pre-rinse spray value
When installed, shall meet the requirements in the *California Code of Regulations*, Title 20 (Appliance Efficiency Regulations), Section 1605.1 (h)(4) Table H-2, Section 1605.3 (h)(4)(A), and Section 1607 (d)(7), and shall be equipped with an integral automatic shutoff.

FOR REFERENCE ONLY: The following table and code section have been reprinted from the *California Code of Regulations*, Title 20 (Appliance Efficiency Regulations), Section 1605.1 (h)(4) and Section 1605.3 (h)(4)(A).

TABLE H-2

STANDARDS FOR COMMERCIAL PRE-RINSE SPRAY VALUES MANUFACTURED ON OR AFTER JANUARY 28, 2019

PRODUCT CLASS [spray force in ounce force (ozf)]	MAXIMUM FLOW RATE (gpm)
Product Class 1 (≤ 5.0 ozf)	1.00
Product Class 2 (> 5.0 ozf and ≤ 8.0 ozf)	1.20
Product Class 3 (> 8.0 ozf)	1.28

☐ ☒ **5.303.4 COMMERCIAL KITCHEN EQUIPMENT.**

5.303.4.1 Food Waste Disposers. Disposers shall either modulate the use of water to no more than 1 gpm when the disposer is not in use (not actively grinding food waste/no-load) or shall automatically shut off after no more than 10 minutes of inactivity. Disposers shall use no more than 8 gpm of water.
Note: This code section does not affect local jurisdiction authority to prohibit or require disposer installation.

☐ ☒ **5.303.5 AREAS OF ADDITION OR ALTERATION.** For those occupancies within the authority of the California Building Standards Commission as specified in Section 103, the provisions of Section 5.303.3 and 5.303.4 shall apply to new fixtures in additions or areas of alteration to the building.

☒ ☐ (SHEET P1.0) **5.303.6 STANDARDS FOR PLUMBING FIXTURES AND FITTINGS.** Plumbing fixtures and fittings shall be installed in accordance with the *California Plumbing Code*, and shall meet the applicable standards referenced in Table 1701.1 of the *California Plumbing Code* and in Chapter 6 of this code.

SECTION 5.304 OUTDOOR WATER USE

☒ ☐ (SEE LANDSCAPING PLANS) **5.304.1 OUTDOOR POTABLE WATER USE IN LANDSCAPE AREAS.** Nonresidential developments shall comply with a local water efficient landscape ordinance or the current California Department of Water Resources' Model Water Efficient Landscape Ordinance (MWELO), whichever is more stringent.

Notes:
1. The Model Water Efficient Landscape Ordinance (MWELO) is located in the California Code of Regulations, Title 23, Chapter 2.7, Division 2.
2. MWELO and supporting documents, including a water budget calculator, are available at: https://www.water.ca.gov/.

☒ ☐ (SEE LANDSCAPING PLANS) **5.304.6 OUTDOOR POTABLE WATER USE IN LANDSCAPE AREAS.** For public schools and community colleges, landscape projects as described in Sections 5.304.6.1 and 5.304.6.2 shall comply with the California Department of Water Resources Model Water Efficient Landscape Ordinance (MWELO) commencing with Section 490 of Chapter 2.7, Division 2, Title 23, *California Code of Regulations*, except that the evapotranspiration adjustment factor (ETAF) shall be 0.65 with an additional water allowance for special landscape areas (SLA) of 0.35.

Exception: Any project with an aggregate landscape area of 2,500 square feet or less may comply with the prescriptive measures contained in Appendix D of the MWELO.

5.304.6.1 Newly constructed landscapes. New construction projects with an aggregate landscape area equal to or greater than 500 square feet.

5.304.6.2 Rehabilitated landscapes. Rehabilitated landscape projects with an aggregate landscape area equal to or greater than 1,200 square feet.

DIVISION 5.4 MATERIAL CONSERVATION AND RESOURCE EFFICIENCY

SECTION 5.401 GENERAL

5.401.1 SCOPE. The provisions of this chapter shall outline means of achieving material conservation and resource efficiency through protection of buildings from exterior moisture, construction waste diversion, employment of techniques to reduce pollution through recycling of materials, and building commissioning or testing and adjusting.

SECTION 5.402 DEFINITIONS

5.402.1 DEFINITIONS. The following terms are defined in Chapter 2 *(and are included here for reference)*

ADJUST. To regulate fluid flow rate and air patterns at the terminal equipment, such as to reduce fan speed or adjust a damper.

BALANCE. To proportion flows within the distribution system, including sub-mains, branches and terminals, according to design quantities.

BUILDING COMMISSIONING. A systematic quality assurance process that spans the entire design and construction process, including verifying and documenting that building systems and components are planned, designed, installed, tested, operated and maintained to meet the owner's project requirements.

ORGANIC WASTE. Food waste, green waste, landscape and pruning wste, nonhazardous wood waste, and food soiled paper waste that is mixed in with food waste.

TEST. A procedure to determine quantitative performance of a system or equipment

SECTION 5.407 WATER RESISTANCE AND MOISTURE MANAGEMENT

5.407.1 WEATHER PROTECTION. Provide a weather-resistant exterior wall and foundation envelope as required by California Building Code Section 1402.2 (Weather Protection), manufacturer's installation instructions or local ordinance, whichever is more stringent.

☒ ☐ (SPRINKLERS FOR LANDSCPAING AWAY FROM OPENINGS AND ROOF OVERHANGS PROVIDED) **5.407.2 MOISTURE CONTROL.** Employ moisture control measures by the following methods.

5.407.2.1 Sprinklers. Design and maintain landscape irrigation systems to prevent spray on structures.

5.407.2.2 Entries and openings. Design exterior entries and/or openings subject to foot traffic or wind-driven rain to prevent water intrusion into buildings as follows:

5.407.2.2.1 Exterior door protection. Primary exterior entries shall be covered to prevent water intrusion by using nonabsorbent floor and wall finishes within at least 2 feet around and perpendicular to such openings plus at least one of the following:

1. An installed awning at least 4 feet in depth.
2. The door is protected by a roof overhang at least 4 feet in depth.
3. The door is recessed at least 4 feet.
4. Other methods which provide equivalent protection.

5.407.2.2.2 Flashing. Install flashings integrated with a drainage plane.

SECTION 5.408 CONSTRUCTION WASTE REDUCTION, DISPOSAL AND RECYCLING

☒ ☐ (CONTRACTOR TO SUBMIT WASTE MANAGEMENT PLAN FOR CONSTRUCTION GENERATED WASTE) **5.408.1 CONSTRUCTION WASTE MANAGEMENT.** Recycle and/or salvage for reuse a minimum of 65% of the non-hazardous construction and demolition waste in accordance with Section 5.408.1.1, 5.408.1.2 or 5.408.1.3; or meet a local construction and demolition waste management ordinance, whichever is more stringent.

5.408.1.1 Construction waste management plan. Where a local jurisdiction does not have a construction and demolition waste management ordinance, submit a construction waste management plan that:

1. Identifies the construction and demolition waste materials to be diverted from disposal by efficient usage, recycling, reuse on the project or salvage for future use or sale.
2. Determines if construction and demolition waste materials will be sorted on-site (source-separated) or bulk mixed (single stream).
3. Identifies diversion facilities where construction and demolition waste material collected will be taken.
4. Specifies that the amount of construction and demolition waste materials diverted shall be calculated by weight or volume, but not by both.

5.408.1.2 Waste Management Company. Utilize a waste management company that can provide verifiable documentation that the percentage of construction and demolition waste material diverted from the landfill complies with this section.

Note: The owner or contractor shall make the determination if the construction and demolition waste material will be diverted by a waste management company.

Exceptions to Sections 5.408.1.1 and 5.408.1.2:

1. Excavated soil and land-clearing debris.
2. Alternate waste reduction methods developed by working with local agencies if diversion or recycle facilities capable of compliance with this item do not exist.
3. Demolition waste meeting local ordinance or calculated in consideration of local recycling facilities and markets.

5.408.1.3 Waste stream reduction alternative. The combined weight of new construction disposal that does not exceed two pounds per square foot of building area may be deemed to meet the 65% minimum requirement as approved by the enforcing agency.

5.408.1.4 Documentation. Documentation shall be provided to the enforcing agency which demonstrates compliance with Sections 5.408.1.1, through 5.408.1.3. The waste management plan shall be updated as necessary and shall be accessible during construction for examination by the enforcing agency.

Notes:

1. Sample forms found in "A Guide to the California Green Building Standards Code (Nonresidential)" located www.dgs.ca.gov/BSC/Resources/Page-Content/Building-Standards-Commission-Resources-List-Folder/CALGreen may be used to assist in documenting compliance with the waste management plan.
2. Mixed construction and demolition debris processors can be located at the California Department of Resources Recycling and Recovery (CalRecycle).

☐ ☒ **5.408.2 UNIVERSAL WASTE. [A]** Additions and alterations to a building or tenant space that meet the scoping provisions in Section 301.3 for nonresidential additions and alterations, shall require verification that Universal Waste items such as fluorescent lamps and ballast and mercury containing thermostats as well as other California prohibited Universal Waste materials are disposed of properly and are diverted from landfills. A list of prohibited Universal Waste materials shall be included in the construction documents.

Note: Refer to the Universal Waste Rule link at: http://www.dtsc.ca.gov/universalwaste/

☒ ☐ (CONTR. TO COORDINATE W/ COORD. W/ 5.408.1) **5.408.3 EXCAVATED SOIL AND LAND CLEARING DEBRIS.** 100 percent of trees, stumps, rocks and associated vegetation and soils resulting primarily from land clearing shall be reused or recycled. For a phased project, such material may be stockpiled on site until the storage site is developed.

Exception: Reuse, either on or off-site, of vegetation or soil contaminated by disease or pest infestation.

Notes:

1. If contamination by disease or pest infestation is suspected, contact the County Agricultural Commissioner and follow its direction for recycling or disposal of the material.
2. For a map of know pest and/or disease quarantine zones, consult with the California Department of Food and Agriculture. (www.cdfa.ca.gov)

SECTION 5.410 BUILDING MAINTENANCE AND OPERATIONS

☒ ☐ (RECYC. BINS TO BE PROVIDED AT DUMPSTER ENCLOSURES) **5.410.1 RECYCLING BY OCCUPANTS.** Provide readily accessible areas that serve the entire building and are identified for the depositing, storage and collection of non-hazardous materials for recycling, including (at a minimum) paper, corrugated cardboard, glass, plastics, organic waste, and metals or meet a lawfully enacted local recycling ordinance, if more restrictive.

Exception: Rural jurisdictions that meet and apply for the exemption in Public Resources Code 42649.82 (a)(2)(A) et seq. shall also be exempt from the organic waste portion of this section.

5.410.1.1 Additions. All additions conducted within a 12-month period under single or multiple permits, resulting in an increase of 30% or more in floor area, shall provide recycling areas on site.

Exception: Additions within a tenant space resulting in less than a 30% increase in the tenant space floor area.

5.410.1.2 Sample ordinance. Space allocation for recycling areas shall comply with Chapter 18, Part 3, Division 30 of the *Public Resources Code*. Chapter 18 is known as the California Solid Waste Reuse and Recycling Access Act of 1991 (Act).

Note: A sample ordinance for use by local agencies may be found in Appendix A of the document at the CalRecycle's web site.

☐ ☒ (CONDITIONED SPACE LESS THAN 10,000 SF) **5.410.2 COMMISSIONING. [N] New buildings 10,000 square feet and over.** For new buildings 10,000 square feet and over, building commissioning shall be included in the design and construction processes of the building project to verify that the building systems and components meet the owner's or owner representative's project requirements. Commissioning shall be performed in accordance with this section by trained personnel with experience on projects of comparable size and complexity. For I-occupancies that are not regulated by OSHPD or for I-occupancies and L-occupancies that are not regulated y the California Energy Code Section 100.0 Scope, all requirements in Sections 5.410.2 through 5.410.2.6 shall apply.

Note: For energy-related systems under the scope (Section 100) of the California Energy Code, including heating, ventilation, air conditioning (HVAC) systems and controls, indoor lighting systems and controls, as well as water heating systems and controls, refer to California Energy Code Section 120.8 for commissioning requirements

Commissioning requirements shall include:

1. Owner's or Owner representative's project requirements.
2. Basis of design.
3. Commissioning measures shown in the construction documents.
4. Commissioning plan.
5. Functional performance testing.
6. Documentation and training.
7. Commissioning report.

Exceptions:

1. Unconditioned warehouses of any size.
2. Areas less than 10,000 square feet used for offices or other conditioned accessory spaces within unconditioned warehouses.
3. Tenant improvements less than 10,000 square feet as described in Section 303.1.1.
4. Open parking garages of any size, or open parking garage areas, of any size, within a structure.

Note: For the purposes of this section, unconditioned shall mean a building, area, or room which does not provide heating and or air conditioning.

Informational Notes:

1. IAS AC 476 is an accreditation criteria for organizations providing training and/or certification of commissioning personnel. AC 476 is available to the Authority Having Jurisdiction as a reference for qualifications of commissioning personnel. AC 476 des not certify individuals to conduct functional performance tests or to adjust and balance systems.

2. Functional performance testing for heating, ventilation, air conditioning systems and lighting controls must be performed in compliance with the *California Energy Code*.

5.410.2.1 Owner's or Owner Representative's Project Requirements (OPR). [N] The expectations and requirements of the building appropriate to its phase shall be documented before the design phase of the project begins. This documentation shall include the following:
1. Environmental and sustainability goals.
2. Building sustainable goals.
3. Indoor environmental quality requirements.
4. Project program, including facility functions and hours of operation, and need for after hours operation.
5. Equipment and systems expectations.
6. Building occupant and operation and maintenance (O&M) personnel expectations.

5.410.2.2 Basis of Design (BOD). [N] A written explanation of how the design of the building systems meets the OPR shall be completed at the design phase of the building project. The Basis of Design document shall cover the following systems:

1. Renewable energy systems.
2. Landscape irrigation systems.
3. Water reuse system.

5.410.2.3 Commissioning plan. [N] Prior to permit issuance a commissioning plan shall be completed to document how the project will be commissioned. The commissioning plan shall include the following:
1. General project information.
2. Commissioning goals.
3. Systems to be commissioned. Plans to test systems and components shall include:
   a. An explanation of the original design intent.
   b. Equipment and systems to be tested, including the extent of tests.
   c. Functions to be tested.
   d. Conditions under which the test shall be performed.
   e. Measurable criteria for acceptable performance.
4. Commissioning team information.
5. Commissioning process activities, schedules and responsibilities. Plans for the completion of commissioning shall be included.

5.410.2.4 Functional performance testing. [N] Functional performance tests shall demonstrate the correct installation and operation of each component, system and system-to-system interface in accordance with the approved plans and specifications. Functional performance testing reports shall contain information addressing each of the building components tested, the testing methods utilized, and include any readings and adjustments made.

5.410.2.5 Documentation and training. [N] A Systems Manual and Systems Operations Training are required, including Occupational Safety and Health Act (OSHA) requirements in *California Code of Regulations* (CCR), Title 8, Section 5142, and other related regulations.

5.410.2.5.1 Systems manual. [N] Documentation of the operational aspects of the building shall be completed within the systems manual and delivered to the building owner or representative. The systems manual shall include the following:
1. Site information, including facility description, history and current requirements.
2. Site contact information.
3. Basic operations and maintenance, including general site operating procedures, basic troubleshooting, recommended maintenance requirements, site events log.
4. Major systems.
5. Site equipment inventory and maintenance notes.
6. A copy of verifications required by the enforcing agency or this code.
7. Other resources and documentation, if applicable.

5.410.2.5.2 Systems operations training. [N] A program for training of the appropriate maintenance staff for each equipment type and/or system shall be developed and documented in the commissioning report and shall include the following:
1. System/equipment overview (what it is, what it does and with what other systems and/or equipment it interfaces).
2. Review and demonstration of servicing/preventive maintenance.
3. Review of the information in the Systems Manual.
4. Review of the record drawings on the system/equipment.

5.410.2.6 Commissioning report. [N] A report of commissioning process activities undertaken through the design and construction phases of the building project shall be completed and provided to the owner or representative.

☒ ☐ (MECH. CONTRACTOR TO PROVIDE TESTING AND ADJUSTING) **5.410.4 TESTING AND ADJUSTING. New buildings less than 10,000 square feet.** Testing and adjusting of systems shall be required for new buildings less than 10,000 square feet or new systems to serve an addition or alteration subject to Section 303.1.

5.410.4.2 (Reserved)

Note: For energy-related systems under the scope (Section 100) of the California Energy Code, including heating, ventilation, air conditioning (HVAC) systems and controls, indoor lighting system and controls, as well as water heating systems and controls, refer to California Energy Code Section 120.8 for commissioning requirements and Sections 120.5, 120.6, 130.4, and 140.9(b)3 for additional testing requirements of specific systems.

5.410.4.2 Systems. Develop a written plan of procedures for testing and adjusting systems. Systems to be included for testing and adjusting shall include at a minimum, as applicable to the project:

1. Renewable energy systems.
2. Landscape irrigation systems.
3. Water reuse systems.

5.410.4.3 Procedures. Perform testing and adjusting procedures in accordance with manufacturer's specifications and applicable standards on each system.

5.410.4.3.1 HVAC balancing. In addition to testing and adjusting, before a new space-conditioning system serving a building or space is operated for normal use, the system shall be balanced in accordance with the procedures defined by the Testing Adjusting and Balancing Bureau National Standards; the National Environmental Balancing Bureau Procedural Standards; Associated Air Balance Council National Standards or as approved by the enforcing agency.

5.410.4.4 Reporting. After completion of testing, adjusting and balancing, provide a final report of testing signed by the individual responsible for performing these services.

5.410.4.5 Operation and maintenance (O & M) manual. Provide the building owner or representative with detailed operating and maintenance instructions and copies of guaranties/warranties for each system. O & M instructions shall be consistent with OSHA requirements in CCR, Title 8, Section 5142, and other related regulations.

5.410.4.5.1 Inspections and reports. Include a copy of all inspection verifications and reports required by the enforcing agency.

DIVISION 5.5 ENVIRONMENTAL QUALITY

SECTION 5.501 GENERAL

5.501.1 SCOPE. The provisions of this chapter shall outline means of reducing the quantity of air contaminants that are odorous, irritating, and/or harmful to the comfort and well-being of a building's installers, occupants and neighbors.

SECTION 5.502 DEFINITIONS

5.502.1 DEFINITIONS. The following terms are defined in Chapter 2 *(and are included here for reference)*

ARTERIAL HIGHWAY. A general term denoting a highway primarily for through traffic usually on a continuous route.

A-WEIGHTED SOUND LEVEL (dBA). The sound pressure level in decibels as measured on a sound level meter using the internationally standardized A-weighting filter or as computed from sound spectral data to which A-weighting adjustments have been made.

1 BTU/HOUR. British thermal units per hour, also referred to as Btu. The amount of heat required to raise one pound of water one degree Fahrenheit per hour, a common measure of heat transfer rate. A ton of refrigeration is 12,000 Btu, the amount of heat required to melt a ton (2,000 pounds) of ice at 32^0 Fahrenheit.

COMMUNITY NOISE EQUIVALENT LEVEL (CNEL). A metric similar to the day-night average sound level (Ldn), except that a 5 decibel adjustment is added to the equivalent continuous sound exposure level for evening hours (7pm to 10pm) in addition to the 10 dB nighttime adjustment used in the Ldn.

COMPOSITE WOOD PRODUCTS. Composite wood products include hardwood plywood, particleboard and medium density fiberboard. "Composite wood products" does not include hardboard, structural plywood, structural panels, structural composite lumber, oriented strand board, glued laminated timber, timber, prefabricated wood I–joists or finger–jointed lumber, all as specified in California Code of Regulations (CCR), Title 17, Section 93120.1(a).

Note: See CCR, Title 17, Section 93120.1.

DAY-NIGHT AVERAGE SOUND LEVEL (Ldn). The A-weighted equivalent continuous sound exposure level for a 24-hour period with a 10 dB adjustment added to sound levels occurring during nighttime hours (10p.m. to 7 a.m.).

DECIBEL (db). A measure on a logarithmic scale of the magnitude of a particular quantity (such as sound pressure, sound power, sound intensity) with respect to a reference quantity.

ELECTRIC VEHICLE (EV). An automotive-type vehicle for on-road use, such as passenger automobiles, buses, trucks, vans, neighborhood electric vehicles, electric motorcycles, and the like, primarily powered by an electric motor that draws current from a rechargeable storage battery, fuel cell, photovoltaic array, or other source of electric current. Plug-in hybrid electric vehicles (PHEV) are considered electric vehicles. For purposes of the *California Electrical Code*, off-road, self-propelled electric vehicles, such as industrial trucks, hoists, lifts, transports, golf carts, airline ground support equipment, tractors, boats, and the like, are not included.

ELECTRIC VEHICLE CHARGING STATION(S) (EVCSj). One or more spaces intended for charging electric vehicles.

ELECTRIC VEHICLE SUPPLY EQUIPMENT (EVSE). The conductors, including the ungrounded, grounded, and equipment grounding conductors and the electric vehicle connectors, attachment plugs, and all other fittings, devices, power outlets, or apparatus installed specifically for the purpose of transferring energy between the premises wiring and the electric vehicle.

ENERGY EQUIVALENT (NOISE) LEVEL (Leq). The level of a steady noise which would have the same energy as the fluctuating noise level integrated over the time of period of interest.

EXPRESSWAY. An arterial highway for through traffic which may have partial control of access, but which may or may not be divided or have grade separations at intersections.

FREEWAY. A divided arterial highway with full control of access and with grade separations at intersections.

GLOBAL WARMING POTENTIAL (GWP). The radiative forcing impact of one mass-based unit of a given greenhouse gas relative to an equivalent unit of carbon dioxide over a given period of time. Carbon dioxide is the reference compound with a GWP of one.

GLOBAL WARMING POTENTIAL VALUE (GWP VALUE). A 100-year GWP value published by the Intergovernmental Panel on Climate Change (IPCC) in either its Second Assessment Report (SAR) (IPCC, 1995); or its Fourth Assessment A-3 Report (AR4) (IPCC, 2007). The SAR GWP values are found in column "SAR (100-yr)" of Table 2.14.; the AR4 GWP values are found in column "100 yr" of Table 2.14.

HIGH-GWP REFRIGERANT. A compound used as a heat transfer fluid or gas that is: (a) a chlorofluorocarbon, a hdrochlorofluorocarbon, a hydrofluorocarbon, a perfluorocarbon, or any compound or blend of compounds, with a GWP value equal to or greater than 150, or (B) any ozone depleting substance as defined in Title 40 of the Code of Federal Regulations, Part 82, sec.82.3 (as amended March 10, 2009).

LONG RADIUS ELBOW. Pipe fitting installed between two lengths of pipe or tubing to allow a change of direction, with a radius 1.5 times the pipe diameter.

LOW-GWP REFRIGERANT. A compound used as a heat transfer fluid or gas that: (A) has a GWP value less than 150, and (B) is not an ozone depleting substance as defined in Title 40 of the Code of Federal Regulations, Part 82, sec.82.3 (as amended March 10, 2009).

MERV. Filter minimum efficiency reporting value, based on ASHRAE 52.2–1999.

MAXIMUM INCREMENTAL REACTIVITY (MIR). The maximum change in weight of ozone formed by adding a compound to the "Base REactive Organic Gas (ROG) Mixture" per weight of compound added, expressed to hundreths of a gram (g O^3/g ROC).

PRODUCT-WEIGHTED MIR (PWMIR). The sum of all weighted-MIR for all ingredients in a product subject to this article. The PWMIR is the total product reactivity expressed to hundredths of a gram of ozone formed per gram of product (excluding container and packaging).

PSIG. Pounds per square inch, guage.

REACTIVE ORGANIC COMPOUND (ROC). Any compound that has the potential, once emitted, to contribute to ozone formation in the troposphere.

SCHRADER ACCESS VALVES. Access fittings with a valve core installed.

SHORT RADIUS ELBOW. Pipe fitting installed between two lengths of pipe or tubing to allow a change of direction, with a radius 1.0 times the pipe diameter.

SUPERMARKET. For the purposes of Section 5.508.2, a supermarket is any retail food facility with 8,000 square feet or more conditioned area, and that utilizes either refrigerated display cases, or walk-in coolers or freezers connected to remote compressor units or condensing units.

VOC. A volatile organic compound broadly defined as a chemical compound based on carbon chains or rings with vapor pressures greater than 0.1 millimeters of mercury at room temperature. These compounds typically contain hydrogen and may contain oxygen, nitrogen and other elements. See CCR Title 17, Section 94508(a)

Note: Where specific regulations are cited from different agencies such as SCAQMD, ARB, etc., the VOC definition included in that specific regulation is the one that prevails for the specific measure in question.

SECTION 5.503 FIREPLACES

☐ ☒ (NOT USED) **5.503.1 FIREPLACES.** Install only a direct-vent sealed-combustion gas or sealed wood-burning fireplace, or a sealed woodstove or pellet stove, and refer to residential requirements in the California Energy Code, Title 24, Part 6, Subchapter 7, Section 150. Woodstoves, pellet stoves and fireplaces shall comply with applicable local ordinances.

5.503.1.1 Woodstoves. Woodstoves and pellet stoves shall comply with U.S. EPA New Source Performance Standards (NSPS) emission limits as applicable, and shall have a permanent label indicating they are certified to meet the emission limits.

SECTION 5.504 POLLUTANT CONTROL

☐ ☒ (NOT USED) **5.504.1 TEMPORARY VENTILATION.** The permanent HVAC system shall only be used during construction if necessary to condition the building or areas of addition or alteration within the required temperature range for material and equipment installation. If the HVAC system is used during construction, use return air filters with a Minimum Efficiency Reporting Value (MERV) of 8, based on ASHRAE 52.2-1999, or an average efficiency of 30% based on ASHRAE 52.1-1992 Replace all filters immediately prior to occupancy, or, if the building is occupied during alteration, at the conclusion of construction.

☒ ☐ (MECH. CONT. TO COMPLY) **5.504.3 Covering of duct openings and protection of mechanical equipment during construction.** At the time of rough installation and during storage on the construction site until final startup of the heating, cooling and ventilation equipment, all duct and other related air distribution component openings shall be covered with tape, plastic, sheetmetal or other methods acceptable to the enforcing agency to reduce the amount of dust, water and debris which may enter the system.

2019CBC City of Madera Building Department
The approval of these plans does not prevent the City of Madera from requiring correction of errors or omissions in the plans, specifications of construction subject to field inspections and approvals, laws, Codes and Ordinances.
APPROVED
By:
Date: MAR 0 3 2022

DBKO DESIGN-BUILD UC#1032283

WHSE [PARTNERS]

BY	REVISION	DATE

ANY INFORMATION OR DATA ON THIS DRAWING IS NOT INTENDED TO BE SUITABLE FOR REUSE BY ANY PERSON, FIRM, CORPORATION, OR ANY OTHERS ON EXTENSIONS OF THIS PROJECT OR FOR ANY USE ON ANY OTHER PROJECT. ANY REUSE WITHOUT WRITTEN VERIFICATION AND ADAPTATION BY THE ENGINEER FOR THE SPECIFIC PURPOSE INTENDED WILL BE AT THE USER'S SOLE RISK AND WITHOUT LIABILITY OR LEGAL EXPOSURE TO THE ENGINEER.

SEAL
REGISTERED PROFESSIONAL ENGINEER ROBERT A. TAMACCIO S5607 STRUCTURAL STATE OF CALIFORNIA
11/17/2021

CALGREEN (SHEET 2 OF 3)
LEASE FLEX. / WAREHOUSE BUILDINGS
FOR
MADERA INDUSTRIAL WHSE, LLC
S. SCHNOOR AVENUE, MADERA, CA

JOB NUMBER	21107
DESIGNED BY	RT
DRAWN BY	CD
DATE	11/17/2021
SHEET NUMBER	G3.1

11/22/2021 2:59:33 PM
G:\Shared drives\DBKOmpany\PROJECTS\20106_WHSE Partners-Fresno, CA\Plans, Calcs & Specs\Arch-Struct (DBKO)\Drawings\Franco Property - Madera\WHSE-BLDGA_2021-09-12.rvt

AIA California

2019 CALIFORNIA GREEN BUILDING STANDARDS CODE

NONRESIDENTIAL MANDATORY MEASURES, SHEET 1 (July 2021, Includes July 2021 Supplement)

Y = YES
N/A = NOT APPLICABLE
RESPON. PARTY = RESPONSIBLE PARTY (ie: ARCHITECT, ENGINEER, OWNER, CONTRACTOR, INSPECTOR ETC.)

Y	N/A	RESPON. PARTY
☒	☐	ALL CONTRACTORS TO COMPLY

5.504.4 FINISH MATERIAL POLLUTANT CONTROL. Finish materials shall comply with Sections 5.504.4.1 through 5.504.4.6.

5.504.4.1 Adhesives, sealants and caulks. Adhesives, sealants, and caulks used on the project shall meet the requirements of the following standards:

1. Adhesives, adhesive bonding primers, adhesive primers, sealants, sealant primers and caulks shall comply with local or regional air pollution control or air quality management district rules where applicable, or SCAQMD Rule 1168 VOC limits, as shown in Tables 5.504.4.1 and 5.504.4.2. Such products also shall comply with the Rule 1168 prohibition on the use of certain toxic compounds (chloroform, ethylene dichloride, methylene chloride, perchloroethylene and trichloroethylene), except for aerosol products as specified in subsection 2, below.

2. Aerosol adhesives, and smaller unit sizes of adhesives, and sealant or caulking compounds (in units of product, less packaging, which do not weigh more than one pound and do not consist of more than 16 fluid ounces) shall comply with statewide VOC standards and other requirements, including prohibitions on use of certain toxic compounds, of *California Code of Regulations*, Title 17, commencing with Section 94507.

TABLE 5.504.4.1 - ADHESIVE VOC LIMIT 1,2

Less Water and Less Exempt Compounds in Grams per Liter

ARCHITECTURAL APPLICATIONS	CURRENT VOC LIMIT
INDOOR CARPET ADHESIVES	50
CARPET PAD ADHESIVES	50
OUTDOOR CARPET ADHESIVES	150
WOOD FLOORING ADHESIVES	100
RUBBER FLOOR ADHESIVES	60
SUBFLOOR ADHESIVES	50
CERAMIC TILE ADHESIVES	65
VCT & ASPHALT TILE ADHESIVES	50
DRYWALL & PANEL ADHESIVES	50
COVE BASE ADHESIVES	50
MULTIPURPOSE CONSTRUCTION ADHESIVES	70
STRUCTURAL GLAZING ADHESIVES	100
SINGLE-PLY ROOF MEMBRANE ADHESIVES	250
OTHER ADHESIVES NOT SPECIFICALLY LISTED	50
SPECIALTY APPLICATIONS	
PVC WELDING	510
CPVC WELDING	490
ABS WELDING	325
PLASTIC CEMENT WELDING	250
ADHESIVE PRIMER FOR PLASTIC	550
CONTACT ADHESIVE	80
SPECIAL PURPOSE CONTACT ADHESIVE	250
STRUCTURAL WOOD MEMBER ADHESIVE	140
TOP & TRIM ADHESIVE	250
SUBSTRATE SPECIFIC APPLICATIONS	
METAL TO METAL	30
PLASTIC FOAMS	50
POROUS MATERIAL (EXCEPT WOOD)	50
WOOD	30
FIBERGLASS	80

1. IF AN ADHESIVE IS USED TO BOND DISSIMILAR SUBSTRATES TOGETHER, THE ADHESIVE WITH THE HIGHEST VOC CONTENT SHALL BE ALLOWED.

2. FOR ADDITIONAL INFORMATION REGARDING METHODS TO MEASURE THE VOC CONTENT SPECIFIED IN THIS TABLE, SEE SOUTH COAST AIR QUALITY MANAGEMENT DISTRICT RULE 1168, www.arb.ca.gov/DRDB/SC/CURHTML/R1168.PDF

TABLE 5.504.4.2 - SEALANT VOC LIMIT

Less Water and Less Exempt Compounds in Grams per Liter

SEALANTS	CURRENT VOC LIMIT
ARCHITECTURAL	250
MARINE DECK	760
NONMEMBRANE ROOF	300
ROADWAY	250
SINGLE-PLY ROOF MEMBRANE	450
OTHER	420
SEALANT PRIMERS	
ARCHITECTURAL	
NONPOROUS	250
POROUS	775
MODIFIED BITUMINOUS	500
MARINE DECK	760
OTHER	750

NOTE: FOR ADDITIONAL INFORMATION REGARDING METHODS TO MEASURE THE VOC CONTENT SPECIFIED IN THESE TABLES, SEE SOUTH COAST AIR QUALITY MANAGEMENT DISTRICT RULE 1168.

5.504.4.3 Paints and coatings. Architectural paints and coatings shall comply with VOC limits in Table 1 of the ARB Architectural Coatings Suggested Control Measure, as shown in Table 5.504.4.3, unless more stringent local limits apply. The VOC content limit for coatings that do not meet the definitions for the specialty coatings categories listed in Table 5.504.4.3 shall be determined by classifying the coating as a Flat, Nonflat or Nonflat-High Gloss coating, based on its gloss, as defined in Subsections 4.21, 4.36 and 4.37 of the 2007 California Air Resources Board Suggested Control Measure, and the corresponding Flat, Nonflat or Nonflat-High Gloss VOC limit in Table 5.504.4.3 shall apply.

5.504.4.3.1 Aerosol Paints and coatings. Aerosol paints and coatings shall meet the PWMIR Limits for ROC in Section 94522(a)(3) and other requirements, including prohibitions on use of certain toxic compounds and ozone depleting substances, in Sections 94522(c)(2) and (d)(2) of *California Code of Regulations*, Title 17, commencing with Section 94520; and in areas under the jurisdiction of the Bay Area Air Quality Management District additionally comply with the percent VOC by weight of product limits of Regulation 8 Rule 49.

TABLE 5.504.4.3 - VOC CONTENT LIMITS FOR ARCHITECTURAL COATINGS 2,3

GRAMS OF VOC PER LITER OF COATING, LESS WATER & LESS EXEMPT COMPOUNDS

COATING CATEGORY	CURRENT VOC LIMIT
FLAT COATINGS	50
NONFLAT COATINGS	100
NONFLAT HIGH GLOSS COATINGS	150
SPECIALTY COATINGS	
ALUMINUM ROOF COATINGS	400
BASEMENT SPECIALTY COATINGS	400
BITUMINOUS ROOF COATINGS	50
BITUMINOUS ROOF PRIMERS	350
BOND BREAKERS	350
CONCRETE CURING COMPOUNDS	350
CONCRETE/MASONRY SEALERS	100
DRIVEWAY SEALERS	50
DRY FOG COATINGS	150
FAUX FINISHING COATINGS	350
FIRE RESISTIVE COATINGS	350
FLOOR COATINGS	100
FORM-RELEASE COMPOUNDS	250
GRAPHIC ARTS COATINGS (SIGN PAINTS)	500
HIGH-TEMPERATURE COATINGS	420
INDUSTRIAL MAINTENANCE COATINGS	250
LOW SOLIDS COATINGS 1	120
MAGNESITE CEMENT COATINGS	450
MASTIC TEXTURE COATINGS	100
METALLIC PIGMENTED COATINGS	500
MULTICOLOR COATINGS	250
PRETREATMENT WASH PRIMERS	420
PRIMERS, SEALERS, & UNDERCOATERS	100
REACTIVE PENETRATING SEALERS	350
RECYCLED COATINGS	250
ROOF COATINGS	50
RUST PREVENTATIVE COATINGS	250
SHELLACS:	
CLEAR	730
OPAQUE	550
SPECIALTY PRIMERS, SEALERS & UNDERCOATERS	100
STAINS	250
STONE CONSOLIDANTS	450
SWIMMING POOL COATINGS	340
TRAFFIC MARKING COATINGS	100
TUB & TILE REFINISH COATINGS	420
WATERPROOFING MEMBRANES	250
WOOD COATINGS	275
WOOD PRESERVATIVES	350
ZINC-RICH PRIMERS	340

1. GRAMS OF VOC PER LITER OF COATING, INCLUDING WATER & EXEMPT COMPOUNDS

2. THE SPECIFIED LIMITS REMAIN IN EFFECT UNLESS REVISED LIMITS ARE LISTED IN SUBSEQUENT COLUMNS IN THE TABLE.

3. VALUES IN THIS TABLE ARE DERIVED FROM THOSE SPECIFIED BY THE CALIFORNIA AIR RESOURCES BOARD, ARCHITECTURAL COATINGS SUGGESTED CONTROL MEASURE, FEB. 1, 2008. MORE INFORMATION IS AVAILABLE FROM THE AIR RESOURCES BOARD.

5.504.4.3.2 Verification. Verification of compliance with this section shall be provided at the request of the enforcing agency. Documentation may include, but is not limited to, the following:

1. Manufacturer's product specification
2. Field verification of on-site product containers

5.504.4.4 Carpet Systems.
All carpet installed in the building interior shall meet the requirements of the California Department of Public Health, "Standard Method for the Testing and Evaluation of Volatile Organic Chemical Emissions from Indoor Sources Using Environmental Chambers," Version 1.2, January 2017 (Emission testing method for California Specifications 01350).

See California Department of Public Health's website for certification programs and testing labs. https://www.cdph.ca.gov/Programs/CCDPHP/DEODC/EHLB/IAQ/Pages/VOC.aspx#material

5.504.4.4.1 Carpet cushion. All carpet cushion installed in the building interior shall meet the requirements of the California Department of Public Health,"Standard Method for the Testing and Evaluation of Volatile Organic Chemical Emissions from Indoor Sources Using Environmental Chambers,"Version 1.2, January 2017 (Emission testing method for California Specifications 01350).

See California Department of Public Health's website for certification programs and testing labs. https://www.cdph.ca.gov/Programs/CCDPHP/DEODC/EHLB/IAQ/Pages/VOC.aspx#material

5.504.4.4.2 Carpet adhesive. All carpet adhesive shall meet the requirements of Table 5.504.4.1.

5.504.4.5 Composite wood products. Hardwood plywood, particleboard and medium density fiberboard composite wood products used on the interior or exterior of the buildings shall meet the requirements for formaldehyde as specified in ARB's Air Toxics Control Measure (ATCM) for Composite Wood (17 CCR 93120 et seq.). Those materials not exempted under the ATCM must meet the specified emission limits, as shown in Table 5.504.4.5.

5.504.4.5.3 Documentation. Verification of compliance with this section shall be provided as requested by the enforcing agency. Documentation shall include at least one of the following:

1. Product certifications and specifications.
2. Chain of custody certifications.
3. Product labeled and invoiced as meeting the Composite Wood Products regulation (see CCR, Title 17, Section 93120, et seq.).
4. Exterior grade products marked as meeting the PS-1 or PS-2 standards of the Engineered Wood Association, the Australian AS/NZS 2269 or European 636 3S standards.
5. Other methods acceptable to the enforcing agency.

TABLE 5.504.4.5 - FORMALDEHYDE LIMITS 1

MAXIMUM FORMALDEHYDE EMISSIONS IN PARTS PER MILLION

PRODUCT	CURRENT LIMIT
HARDWOOD PLYWOOD VENEER CORE	0.05
HARDWOOD PLYWOOD COMPOSITE CORE	0.05
PARTICLE BOARD	0.09
MEDIUM DENSITY FIBERBOARD	0.11
THIN MEDIUM DENSITY FIBERBOARD 2	0.13

1. VALUES IN THIS TABLE ARE DERIVED FROM THOSE SPECIFIED BY THE CALIFORNIA AIR RESOURCES BOARD, AIR TOXICS CONTROL MEASURE FOR COMPOSITE WOOD AS TESTED IN ACCORDANCE WITH ASTM E 1333. FOR ADDITIONAL INFORMATION, SEE CALIFORNIA CODE OF REGULATIONS, TITLE 17, SECTIONS 93120 THROUGH 93120.12.

2. THIN MEDIUM DENSITY FIBERBOARD HAS A MAXIMUM THICKNESS OF 5/16 INCHES (8 MM).

5.504.4.6 Resilient flooring systems. Where resilient flooring is installed, at least 80 percent of floor area receiving resilient flooring shall meet the requirements of the California Department of Public Health,"Standard Method for the Testing and Evaluation of Volatile Organic Chemical Emissions from Indoor Sources Using Environmental Chambers," Version 1.2, January 2017 (Emission testing method for California Specifications 01350)

See California Department of Public Health's website for certification programs and testing labs. https://www.cdph.ca.gov/Programs/CCDPHP/DEODC/EHLB/IAQ/Pages/VOC.aspx#material

5.504.4.6.1 Verification of compliance. Documentation shall be provided verifying that resilient flooring materials meet the pollutant emission limits.

5.504.5.3 Filters. In mechanically ventilated buildings, provide regularly occupied areas of the building with air filtration media for outside and return air that provides at least a Minimum Efficiency Reporting Value (MERV) of 13. MERV 13 filters shall be installed prior to occupancy, and recommendations for maintenance with filters of the same value shall be included in the operation and maintenance manual.

Exceptions: Existing mechanical equipment.

5.504.5.3.1 Labeling. Installed filters shall be clearly labeled by the manufacturer indicating the MERV rating.

☐ Y ☒ N/A

5.504.7 ENVIRONMENTAL TOBACCO SMOKE (ETS) CONTROL. Where outdoor areas are provided for smoking, prohibit smoking within 25 feet of building entries, outdoor air intakes and operable windows and within the building as already prohibited by other laws or regulations; or as enforced by ordinances, regulations or policies of any city, county, city and county, California Community College, campus of the California State University, or campus of the University of California, whichever are more stringent. When ordinances, regulations or policies are not in place, post signage to inform building occupants of the prohibitions.

SECTION 5.505 INDOOR MOISTURE CONTROL

☒ Y ☐ N/A — MECH. DESIGN COMPLIES

5.505.1 INDOOR MOISTURE CONTROL. Buildings shall meet or exceed the provisions of California Building Code, CCR, Title 24, Part 2, Sections 1202 (Ventilation) and Chapter 14 (Exterior Walls). For additional measures, see Section 5.407.2 of this code.

SECTION 5.506 INDOOR AIR QUALITY

☒ Y ☐ N/A — MECH. DESIGN COMPLIES

5.506.1 OUTSIDE AIR DELIVERY. For mechanically or naturally ventilated spaces in buildings, meet the minimum requirements of Section 120.1 (Requirements For Ventilation) of the *California Energy Code*, or the applicable local code, whichever is more stringent, and Division 1, Chapter 4 of CCR, Title 8.

☐ Y ☒ N/A

5.506.2 CARBON DIOXIDE (CO_2) MONITORING. For buildings or additions equipped with demand control ventilation, CO_2 sensors and ventilation controls shall be specified and installed in accordance with the requirements of the California Energy Code, Section 120(c)(4).

SECTION 5.507 ENVIRONMENTAL COMFORT

☐ Y ☒ N/A

5.507.4 ACOUSTICAL CONTROL. Employ building assemblies and components with Sound Transmission Class (STC) values determined in accordance with ASTM E 90 and ASTM E 413, or Outdoor-Indoor Sound Transmission Class (OITC) determined in accordance with ASTM E 1332, using either the prescriptive or performance method in Section 5.507.4.1 or 5.507.4.2.

Exception: Buildings with few or no occupants or where occupants are not likely to be affected by exterior noise, as determined by the enforcement authority, such as factories, stadiums, storage, enclosed parking structures and utility buildings.

Exception: [DSA-SS] For public schools and community colleges, the requirements of this section and all subsections apply only to new construction.

5.507.4.1 Exterior noise transmission, prescriptive method. Wall and roof-ceiling assemblies exposed to the noise source making up the building or addition envelope or altered envelope shall meet a composite STC rating of at least 50 or a composite OITC rating of no less than 40, with exterior windows of a minimum STC of 40 or OITC of 30 in the following locations:

1. Within the 65 CNEL noise contour of an airport.

Exceptions:

1. L_{dn} or CNEL for military airports shall be determined by the facility Air Installation Compatible Land Use Zone (AICUZ) plan.
2. L_{dn} or CNEL for other airports and heliports for which a land use plan has not been developed shall be determined by the local general plan noise element.

2. Within the 65 CNEL or L_{dn} noise contour of a freeway or expressway, railroad, industrial source or fixed-guideway source as determined by the Noise Element of the General Plan.

5.507.4.1.1. Noise exposure where noise contours are not readily available. Buildings exposed to a noise level of 65 dB L_{eq} - 1-hr during any hour of operation shall have building, addition or alteration exterior wall and roof-ceiling assemblies exposed to the noise source meeting a composite STC rating of at least 45 (or OITC 35), with exterior windows of a minimum STC of 40 (or OITC 30).

5.507.4.2 Performance Method. For buildings located as defined in Section 5.507.4.1 or 5.507.4.1.1, wall and roof-ceiling assemblies exposed to the noise source making up the building or addition envelope or altered envelope shall be constructed to provide an interior noise environment attributable to exterior sources that does not exceed an hourly equivalent noise level (Leq-1Hr) of 50 dBA in occupied areas during any hour of operation.

5.507.4.2.1 Site Features. Exterior features such as sound walls or earth berms may be utilized as appropriate to the building, addition or alteration project to mitigate sound migration to the interior.

5.507.4.2.2 Documentation of Compliance. An acoustical analysis documenting complying interior sound levels shall be prepared by personnel approved by the architect or engineer of record.

5.507.4.3 Interior sound transmission. Wall and floor-ceiling assemblies separating tenant spaces and tenant spaces and public places shall have an STC of at least 40.

Note: Examples of assemblies and their various STC ratings may be found at the California Office of Noise Control: www.toolbase.org/PDF/CaseStudies/stc_icc_ratings.pdf.

SECTION 5.508 OUTDOOR AIR QUALITY

☐ Y ☒ N/A

5.508.1 Ozone depletion and greenhouse gas reductions. Installations of HVAC, refrigeration and fire suppression equipment shall comply with Sections 5.508.1.1 and 5.508.1.2.

5.508.1.1 Chlorofluorocarbons (CFCs). Install HVAC, refrigeration and fire suppression equipment that do not contain CFCs.

5.508.1.2 Halons. Install HVAC, refrigeration and fire suppression equipment that do not contain Halons.

☐ Y ☒ N/A

5.508.2 Supermarket refrigerant leak reduction. New commercial refrigeration systems shall comply with the provisions of this section when installed in retail food stores 8,000 square feet or more conditioned area, and that utilize either refrigerated display cases, or walk-in coolers or freezers connected to remote compressor units or condensing units. The leak reduction measures apply to refrigeration systems containing high-global-warming potential (high-GWP) refrigerants with a GWP of 150 or greater. New refrigeration systems include both new facilities and the replacement of existing refrigeration systems in existing facilities.

Exception: Refrigeration systems containing low-global warming potential (low-GWP) refrigerant with a GWP value less than 150 are not subject to this section. Low-GWP refrigerants are nonozone-depleting refrigerants that include ammonia, carbon dioxide (CO_2), and potentially other refrigerants.

5.508.2.1 Refrigerant piping. Piping compliant with the California Mechanical Code shall be installed to be accessible for leak protection and repairs. Piping runs using threaded pipe, copper tubing with an outside diameter (OD) less than 1/4 inch, flared tubing connections and short radius elbows shall not be used in refrigerant systems except as noted below.

5.508.2.1.1 Threaded pipe. Threaded connections are permitted at the compressor rack.

5.508.2.1.2 Copper pipe. Copper tubing with an OD less than 1/4 inch may be used in systems with a refrigerant charge of 5 pounds or less.

5.508.2.1.2.1 Anchorage. One-fouth-inch OD tubing shall be securely clamped to a rigid base to keep vibration levels below 8 mils.

5.508.2.1.3 Flared tubing connections. Double-flared tubing connections may be used for pressure controls, valve pilot lines and oil.

Exception: Single-flared tubing connections may be used with a multiring seal coated with industrial sealant suitable for use with refrigerants and tightened in accordance with manufacturer's recommendations.

5.508.2.1.4 Elbows. Short radius elbows are only permitted where space limitations prohibit use of long radius elbows.

5.508.2.2 Valves. Valves Valves and fittings shall comply with the *California Mechanical Code* and as follows.

5.508.2.2.1 Pressure relief valves. For vessels containing high-GWP refrigerant, a rupture disc shall be installed between the outlet of the vessel and the inlet of the pressure relief valve.

5.508.2.2.1.1 Pressure detection. A pressure gauge, pressure transducer or other device shall be installed in the space between the rupture disc and the relief valve inlet to indicate a disc rupture or discharge of the relief valve.

5.508.2.2.2 Access valves. Only Schrader access valves with a brass or steel body are permitted for use.

5.508.2.2.2.1 Valve caps. For systems with a refrigerant charge of 5 pounds or more, valve caps shall be brass or steel and not plastic.

5.508.2.2.2.2 Seal caps. If designed for it, the cap shall have a neoprene O-ring in place.

5.508.2.2.2.2.1 Chain tethers. Chain tethers to fit ovr the stem are required for valves designed to have seal caps.

Exception: Valves with seal caps that are not removed from the valve during stem operation.

5.508.2.3 Refrigerated service cases. Refrigerated service cases holding food products containing vinegar and salt shall have evaporator coils of corrosion-resistant material, such as stainless steel; or be coated to prevent corrosion from these substances.

5.508.2.3.1 Coil coating. Consideration shall be given to the heat transfer efficiency of coil coating to maximize energy efficiency.

5.508.2.4 Refrigerant receivers. Refrigerant receivers with capacities greater than 200 pounds shall be fitted with a device tha indicates the level of refrigerant in the receiver.

5.508.2.5 Pressure testing. The system shall be pressure tested during installation prior to evacuation and charging.

5.508.2.5.1 Minimum pressure. The system shall be charged with regulated dry nitrogen and appropriate tracer gas to bring system pressure up to 300 psig minimum.

5.508.2.5.2 Leaks. Check the system for leaks, repair any leaks, and retest for pressure using the same gauge.

5.508.2.5.3 Allowable pressure change. The system shall stand, unaltered, for 24 hours with no more than a +/- one pound pressure change from 300 psig, measured with the same gauge.

5.508.2.6 Evacuation. The system shall be evacuated after pressure testing and prior to charging.

5.508.2.6.1 First vacuum. Pull a system vacuum down to at least 1000 microns (+/- 50 microns), and hold for 30 minutes.

5.508.2.6.2 Second vacuum. Pull a second system vacuum to a minimum of 500 microns and hold for 30 minutes.

5.508.2.6.3 Third vacuum. Pull a third vacuum down to a minimum of 300 microns, and hold for 24 hours with a maximum drift of 100 microns over a 24-hour period.

CHAPTER 7
INSTALLER & SPECIAL INSPECTOR QUALIFICATIONS

702 QUALIFICATIONS

702.1 INSTALLER TRAINING. HVAC system installers shall be trained and certified in the proper installation of HVAC systems including ducts and equipment by a nationally or regionally recognized training or certification program. Uncertified persons may perform HVAC installations when under the direct supervision and responsibility of a person trained and certified to install HVAC systems or contractor licensed to install HVAC systems. Examples of acceptable HVAC training and certification programs include but are not limited to the following:

1. State certified apprenticeship programs.
2. Public utility training programs.
3. Training programs sponsored by trade, labor or statewide energy consulting or verification organizations.
4. Programs sponsored by manufacturing organizations.
5. Other programs acceptable to the enforcing agency.

702.2 SPECIAL INSPECTION [HCD]. When required by the enforcing agency, the owner or the responsible entity acting as the owner's agent shall employ one or more special inspectors to provide inspection or other duties necessary to substantiate compliance with this code. Special inspectors shall demonstrate competence to the satisfaction of the enforcing agency for the particular type of inspection or task to be performed. In addition to other certifications or qualifications acceptable to the enforcing agency, the following certifications or education may be considered by the enforcing agency when evaluating the qualifications of a special inspector:

1. Certification by a national or regional green building program or standard publisher.
2. Certification by a statewide energy consulting or verification organization, such as HERS raters, building performance contractors, and home energy auditors.
3. Successful completion of a third party apprentice training program in the appropriate trade.
4. Other programs acceptable to the enforcing agency.

Notes:

1. Special inspectors shall be independent entities with no financial interest in the materials or the project they are inspecting for compliance with this code.
2. HERS raters are special inspectors certified by the California Energy Commission (CEC) to rate homes in California according to the Home Energy Rating System (HERS).

[BSC-CG] When required by the enforcing agency, the owner or the responsible entity acting as the owner's agent shall employ one or more special inspectors to provide inspection or other duties necessary to substantiate compliance with this code. Special inspectors shall demonstrate competence to the satisfaction of the enforcing agency for the particular type of inspection or task to be performed. In addition, the special inspector shall have a certification from a recognized state, national or international association, as determined by the local agency. The area of certification shall be closely related to the primary job function, as determined by the local agency.

Note: Special inspectors shall be independent entities with no financial interest in the materials or the project they are inspecting for compliance with this code.

703 VERIFICATIONS

703.1 DOCUMENTATION. Documentation used to show compliance with this code shall include but is not limited to construction documents, plans, specifications, builder or installer certification, inspection reports, or other methods acceptable to the enforcing agency which demonstrate substantial conformance. When specific documentation or special inspection is necessary to verify compliance, that method of compliance will be specified in the appropriate section or identified applicable checklist.

2019CBC City of Madera Building Department — APPROVED MAR 03 2022

DBKO DESIGN-BUILD LIC#1032283

WHSE [PARTNERS]

ANY INFORMATION OR DATA ON THIS DRAWING IS NOT INTENDED TO BE SUITABLE FOR REUSE BY ANY PERSON, FIRM, CORPORATION, OR ANY OTHERS ON EXTENSIONS OF THIS PROJECT OR FOR ANY USE ON ANY OTHER PROJECT. ANY REUSE WITHOUT WRITTEN VERIFICATION AND ADAPTATION BY THE ENGINEER FOR THE SPECIFIC PURPOSE INTENDED WILL BE AT THE USER'S SOLE RISK AND WITHOUT LIABILITY OR LEGAL EXPOSURE TO THE ENGINEER.

BY	REVISION	DATE

SEAL: REGISTERED PROFESSIONAL ENGINEER ROBERT A. TAMACCIO S5607 STRUCTURAL STATE OF CALIFORNIA 11/17/2021

CALGREEN (SHEET 3 OF 3)
LEASE FLEX. / WAREHOUSE BUILDINGS
FOR
MADERA INDUSTRIAL WHSE, LLC
S. SCHNOOR AVENUE, MADERA, CA

JOB NUMBER	21107
DESIGNED BY	RT
DRAWN BY	CD
DATE	11/17/2021
SHEET NUMBER	G3.2

G:\Shared drives\DBKOmpany\PROJECTS\20108_WHSE Partners-Fresno, CA\Plans, Calcs & Specs\Arch-Struct (DBKO)\Drawings\Franco Property - Madera\WHSE-BLDGA_2021-09-12.rvt 11/22/2021 2:59:35 PM

A5.602
CALGreen VERIFICATION GUIDELINES
MANDATORY MEASURES CHECKLIST
(2019 SUPPLEMENT effective July 1, 2021)

Application: This checklist shall be used for nonresidential projects that meet one of the following: new construction, building additions of 1,000 square feet or greater, or building alterations with a permit valuation of $200,000 or more pursuant to Section 301.3 AND do not trigger a Tier 1 or Tier 2 requirement:

Y = Yes (section has been selected and/or included)
N/A = Not Applicable (code section does not apply to the project—mainly used for additions and alterations)
O = Other (provide explanation)
[N] = New construction pursuant to Section 301.3
[A] = Additions and/or Alterations pursuant to Section 301.3

Chapter 5 Divisions

DIVISION 5.1 Planning and Design

Requirement	SECTION TITLE	CODE SECTION	Y	N	N/A	O	PLAN SHEET, SPEC, OR ATTACH REFERENCE
Mandatory	Storm water pollution prevention for projects that disturb less than 1 acre of land	5.106.1 through 5.106.2			X		
Mandatory	Short-term bicycle parking (with exception)	5.106.4.1.1	X				SEE SHEET A1.0
Mandatory	Long-term bicycle parking	5.106.4.1.2 through 5.106.4.1.5	X				SEE SHEET A1.0
Mandatory	Designated parking for clean air vehicles with footnote and note	5.106.5.2	X				SEE SHEET A1.0
Mandatory	Parking stall marking	5.106.5.2.1	X				SEE SHEET A1.0, NOTE 3
Mandatory	Single charging space requirements	5.106.5.3.1			X		
Mandatory	Multiple charging space requirements [N]	5.106.5.3.2	X				SEE ELECTRICAL PLANS FOR FUTURE CHARGING PROVISIONS
Mandatory	EV charging space calculation [N] (with exceptions)	5.106.5.3.3	X				13 OF THE 18 STALLS REQUIRE FUTURE CHARGING PROVISIONS, SEE ELECTRICAL SITE PLAN.
Mandatory	[N] Identification	5.106.5.3.4	X				SEE ELECTRICAL PLANS FOR SERVICE PANEL CIRCUIT IDENTIFICATION
Mandatory	[N] Future charging spaces with note	5.106.5.3.5	X				SEE SHEET A1.0, NOTE 3
Mandatory	Light pollution reduction [N] (with exceptions, notes and table)	5.106.8	X				SEE ELECTRICAL PLANS FOR OUTDOOR LIGHTING SCHED.
Mandatory	Grading and paving (exception for additions and alterations not altering the drainage path)	5.106.10	X				SEE CIVIL GRADING PLAN

DIVISION 5.2 Energy Efficiency

Requirement	SECTION TITLE	CODE SECTION	Y	N	N/A	O	PLAN SHEET, SPEC, OR ATTACH REFERENCE
Mandatory	Meet the minimum energy efficiency standard	5.201.1	X				SEE TITLE 24 REPORT

DIVISION 5.3 Water Efficiency and Conservation

Requirement	SECTION TITLE	CODE SECTION	Y	N	N/A	O	PLAN SHEET, SPEC, OR ATTACH REFERENCE
Mandatory	Separate meters (new buildings or additions > 50,000 sf that consume more than 100 gal/day)	5.303.1.1			X		
Mandatory	Separate meters (for tenants in new buildings or additions that consume more than 1,000 gal/day)	5.303.1.2			X		
Mandatory	Water closets shall not exceed 1.28 gallons per flush (gpf)	5.303.3.1	X				SEE PLUMBING PLANS FOR FIXTURE SCHEDULE
Mandatory	Wall-mounted urinals shall not exceed 0.125 gpf	5.303.3.2.1			X		
Mandatory	Floor-mounted urinals shall not exceed 0.5 gpf	5.303.3.2.2			X		
Mandatory	Single showerhead shall have maximum flow rate of 1.8 gpm (gallons per minute) at 80 psi	5.303.3.3.1			X		
Mandatory	Multiple showerheads serving one shower shall have a combined flow rate of 1.8 gpm at 80 psi	5.303.3.3.2			X		
Mandatory	Nonresidential lavatory faucets	5.303.3.4.1	X				SEE PLUMBING SCHED. ON P1.0 FOR COMPLIANT FIXTURES
Mandatory	Kitchen faucets	5.303.3.4.2			X		
Mandatory	Wash fountains	5.303.3.4.3			X		
Mandatory	Metering faucets	5.303.3.4.4			X		
Mandatory	Metering faucets for wash fountains	5.303.3.4.5			X		
Mandatory	Pre-rinse spray valve	5.303.3.4.6			X		
Mandatory	Food waste disposers	5.303.4.1			X		
Mandatory	Areas of additions or alterations	5.303.5			X		
Mandatory	Standards for plumbing fixtures and fittings	5.303.6	X				SEE PLUMBING SCHED. ON P1.0 FOR COMPLIANT FIXTURES
Mandatory	Outdoor potable water use in landscape areas (with notes)	5.304.1					SEE LANDSCAPING PLANS

DIVISION 5.4 Material Conservation and Resource Efficiency

Requirement	SECTION TITLE	CODE SECTION	Y	N	N/A	O	PLAN SHEET, SPEC, OR ATTACH REFERENCE
Mandatory	Weather protection	5.407.1	X				SEE ARCH. PLANS FOR WEATHER-RESISTANT EXT. WALL CONST.
Mandatory	Moisture control: sprinklers	5.407.2.1	X				SEE LANDSCAPING PLANS.
Mandatory	Moisture control: exterior door protection	5.407.2.2.1	X				OVERHANGS PROVIDED
Mandatory	Moisture control: flashing	5.407.2.2.2	X				SEE PEMB DRAWINGS FOR BLDG. FLASHINGS
Mandatory	Construction waste management—comply with either: Sections 5.408.1.1, 5.408.1.2, 5.408.1.3 or more stringent local ordinance	5.408.1.1, 5.408.1.2, 5.408.1.3	X				CONTRACTOR IS TO SUBMIT WASTE MANAGEMENT PLAN FOR CONSTRUCTION GENERATED WASTE PRIOR TO START OF WORK
Mandatory	Construction waste management: documentation	5.408.1.4	X				PROVIDE CITY OF MADERA REQUIRED DOCUMENTATION
Mandatory	Universal waste [A]	5.408.2		X			
Mandatory	Excavated soil and land clearing debris (100% reuse or recycle)	5.408.3	X				
Mandatory	Recycling by occupants (with exception)	5.410.1	X				RECYCLING BINS TO BE PROVIDED AT DUMPSTER ENCLOSURES
Mandatory	Recycling by occupants: additions (with exception)	5.410.1.1			X		
Mandatory	Recycling by occupants: sample ordinance	5.410.1.2	X				RECYCLING BINS TO BE PROVIDED AT DUMPSTER ENCLOSURES
Mandatory	Commissioning new buildings (≥ 10,000 sf) [N]	5.410.2			X		CONDITIONED SPACES FOR BLDG.'S LESS THAN 10,000 SF
Mandatory	Owner's or owner representative's Project Requirements (OPR) [N]	5.410.2.1			X		
Mandatory	Basis of Design (BOD) [N]	5.410.2.2			X		
Mandatory	Commissioning plan [N]	5.410.2.3			X		
Mandatory	Functional performance testing [N]	5.410.2.4			X		
Mandatory	Documentation and training [N]	5.410.2.5			X		
Mandatory	Systems manual [N]	5.410.2.5.1			X		
Mandatory	Systems operation training [N]	5.410.2.5.2			X		
Mandatory	Commissioning report [N]	5.410.2.6			X		
Mandatory	Testing and adjusting for new buildings < 10,000 sf or new systems that serve additions or alterations [A]	5.410.4	X				MECH. CONTRACTOR TO PROVIDE TESTING AND ADJUSTING FOR CONDITIONED SPACES
Mandatory	System testing plan for renewable energy, landscape irrigation and water reuse [A]	5.410.4.2	X				SEE LANDSCAPING PLANS FOR IRRIGATION REQUIREMENTS.
Mandatory	Procedures for testing and adjusting	5.410.4.3	X				
Mandatory	Procedures for HVAC balancing	5.410.4.3.1	X				
Mandatory	Reporting for testing and adjusting	5.410.4.4	X				
Mandatory	Operation and maintenance (O&M) manual	5.410.4.5	X				
Mandatory	Inspection and reports	5.410.4.5.1					PROV. IF REQUIRED BY AHJ

DIVISION 5.5 Environmental Quality

Requirement	SECTION TITLE	CODE SECTION	Y	N	N/A	O	PLAN SHEET, SPEC, OR ATTACH REFERENCE
Mandatory	Fireplaces	5.503.1			X		
Mandatory	Woodstoves	5.503.1.1			X		
Mandatory	Temporary ventilation	5.504.1			X		
Mandatory	Covering of ducts openings and protection of mechanical equipment during construction	5.504.3	X				MECH. CONTRACTOR TO COMPLY
Mandatory	Adhesives, sealants, and caulks	5.504.4.1	X				SEE PRODUCT REQUIREMENTS ON SHEET G3.2
Mandatory	Paints and coatings	5.504.4.3	X				SEE PRODUCT REQUIREMENTS ON SHEET G3.2
Mandatory	Aerosol paints and coatings	5.504.4.3.1	X				SEE PRODUCT REQUIREMENTS ON SHEET G3.2
Mandatory	Aerosol paints and coatings: verification	5.504.4.3.2	X				PROVIDE DOCUMENTATION TO AHJ AS REQUIRED
Mandatory	Carpet systems	5.504.4.4			X		
Mandatory	Carpet cushion	5.504.4.4.1			X		
Mandatory	Carpet adhesives per Table 5.504.4.1	5.504.4.4.2			X		
Mandatory	Composite wood products	5.504.4.5			X		
Mandatory	Composite wood products: documentation	5.504.4.5.3			X		
Mandatory	Resilient flooring systems	5.504.4.6	X				SEE PRODUCT REQUIREMENTS ON SHEET G3.2
Mandatory	Resilient flooring: verification of compliance	5.504.4.6.1	X				PROVIDE DOCUMENTATION TO AHJ AS REQUIRED
Mandatory	Filters (with exceptions)	5.504.5.3	X				PROV. MERV 13 FILTERS ON ALL NEW VENTILATION EQUIP.
Mandatory	Filters: labeling	5.504.5.3.1	X				VERIFY LABELS CLEARLY SPECIFY MERV RATING.
Mandatory	Environmental tobacco smoke (ETS) control	5.504.7			X		
Mandatory	Indoor moisture control	5.505.1	X				DESIGN COMPLIES
Mandatory	Outside air delivery	5.506.1	X				SEE MECH. DWGS.
Mandatory	Carbon dioxide (CO_2) monitoring	5.506.2	X				SEE MECH. DWGS.
Mandatory	Acoustical control (with exception)	5.507.4			X		
Mandatory	Exterior noise transmission, prescriptive method (with exceptions)	5.507.4.1			X		
Mandatory	Noise exposure where noise contours are not readily available	5.507.4.1.1			X		
Mandatory	Performance method	5.507.4.2			X		
Mandatory	Site features	5.507.4.2.1			X		
Mandatory	Documentation of compliance	5.507.4.2.2			X		
Mandatory	Interior sound transmission (with note)	5.507.4.3			X		
Mandatory	Ozone depletion and greenhouse gas reductions	5.508.1	X				SEE MECH.
Mandatory	Chlorofluorocarbons (CFCs)	5.508.1.1			X		
Mandatory	Halons	5.508.1.2			X		
Mandatory	Supermarket refrigerant leak reduction for retail food stores 8,000 square feet or more	5.508.2 through 5.508.2.6.3			X		
	END OF MANDATORY PROVISIONS						

Documentation Author's / Responsible Designer's Declaration Statement
☐ **Mandatory:** I attest that this mandatory provisions checklist is accurate and complete.

Signature:			
Company:	DBKO DESIGN+BUILD, LLC	Date:	2/28/2022
Address:	3406 VIA LIDO, STE 1A 24	License:	S5607
City/State/Zip:	NEWPORT BEACH, CA 92663	Phone:	619.307.9770

2019CBC
City of Madera
Building Department
The approval of these plans does not prevent the City of Madera from requiring correction of errors or omissions in the plans, specifications or construction. Subject to field inspections and approvals of other codes and ordinances.
APPROVED
By:
Date: MAR 03 2022

DBKO DESIGN+BUILD
WHSE PARTNERS

DATE	REVISION	BY

ANY INFORMATION OR DATA ON THIS DRAWING IS NOT INTENDED TO BE SUITABLE FOR REUSE BY ANY PERSON, FIRM, CORPORATION, OR ANY OTHERS ON EXTENSIONS OF THIS PROJECT OR FOR ANY USE ON ANY OTHER PROJECT. ANY REUSE WITHOUT WRITTEN VERIFICATION OR ADAPTATION BY DBKO FOR THE SPECIFIC PURPOSE INTENDED WILL BE AT THE USER'S SOLE RISK AND WITHOUT LIABILITY OR LEGAL EXPOSURE TO THE ENGINEER.

SEAL
REGISTERED PROFESSIONAL ENGINEER
ROBERT A. TAMACCIO
S5607
STRUCTURAL
STATE OF CALIFORNIA
2/28/2022

CALGREEN (SHEET 4 OF 4)
LEASE FLEX. / WAREHOUSE BUILDINGS
FOR
MADERA INDUSTRIAL WHSE, LLC
S. SCHNOOR AVENUE, MADERA, CA

JOB NUMBER 21107
DESIGNED BY RT
DRAWN BY
DATE 2/28/2022
SHEET NUMBER G3.3

G:\Shared drives\DBKOCompany\PROJECTS\2019\5_WHSE Partners Projects\Plans, Calcs & Specs\Arch-Struct (DBKO)\Drawings\Fresno Property - Masters\WHSE-BLDGA_2022-01-31.rvt 2/28/2022 2:23:24 PM

NOTES:

1. ACCESSIBLE PATH OF TRAVEL TO ENTRANCES (MAX. SLOPE OF 5% PERMITTED IN THE DIRECTION OF TRAVEL AND MAX. 2% CROSS-SLOPE PERPENDICULAR TO THE DIRECTION OF TRAVEL).
2. SEE SHEET A1.1 FOR ACCESSIBLE PARKING STALL DETAILS.
3. CLEAN AIR VEHICLE PARKING STALLS - BASED ON THE NUMBER OF PARKING STALLS PROVIDED, 18 STALLS ARE TO BE DESIGNATED FOR CLEAN AIR VEHICLES. WHERE AN * IS DENOTED AT A STALL, THE FOLLOWING TEXT IS TO BE PLACED SUCH THAT THE LOWER EDGE OF THE SECOND ROW OF TEXT IS ALIGNED WITH THE END OF THE STALL STRIPING AND IS VISIBLE BENEATH A PARKED VEHICLE:

   CLEAN AIR/
   VANPOOL/EV

4. FOR CITY OF MADERA STANDARD CMU TRASH ENCLOSURE CONSTRUCTION, SEE SHEET A1.1. IN ADDITION, TRASH ENCLOSURES ARE TO MEET ALL CLEARANCES AND ACCESS REQUIREMENTS OF MID-VALLEY DISPOSAL.

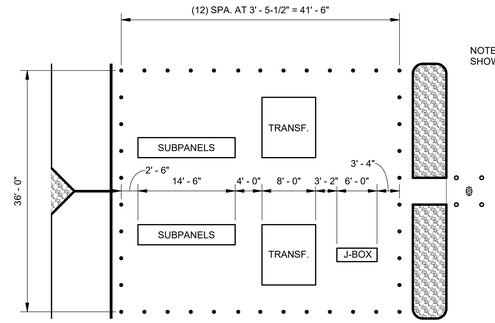

NOTE - EAST TRANSFORMER AREA SHOWN. WEST AREA SIMILAR

2 / A1.0 PARTIAL PLAN AT TRANSFORMER YARD
3/32" = 1'-0"

CITY OF MADERA OFF-STREET PARKING REQUIREMENTS (MUNICIPAL CODE SECTION 10-3.1202):

USE	PARKING SPACES REQUIRED
MANUFACTURING, WAREHOUSES, STORAGE USES, AND WHOLESALE HOUSES	ONE SPACE FOR EACH TWO EMPLOYEES, PLUS ONE SPACE FOR EACH 300 SQUARE FEET OF OFFICE SPACE AND CUSTOMER NET FLOOR AREA, PLUS ONE LOADING SPACE FOR EACH 10,000 SQUARE FEET OF GROSS FLOOR AREA

PARKING STALL CALCULATION

STANDARD STALLS - 9'x19'

(2 EMPLOYEES PER UNIT x 74 UNITS = 148 EMPLOYEES / 2 = 74 SPACES
+ (74 UNITS)(140 SF OFFICE / UNIT) / 300 = 32 SPACES
106 SPACES REQUIRED

124 SPACES PROVIDED

LOADING SPACES - 10'x35'

(2)(37,050 SF + 35,100 SF) / 10,000 = 14 LOADING SPACES REQUIRED

24 LOADING SPACES PROVIDED

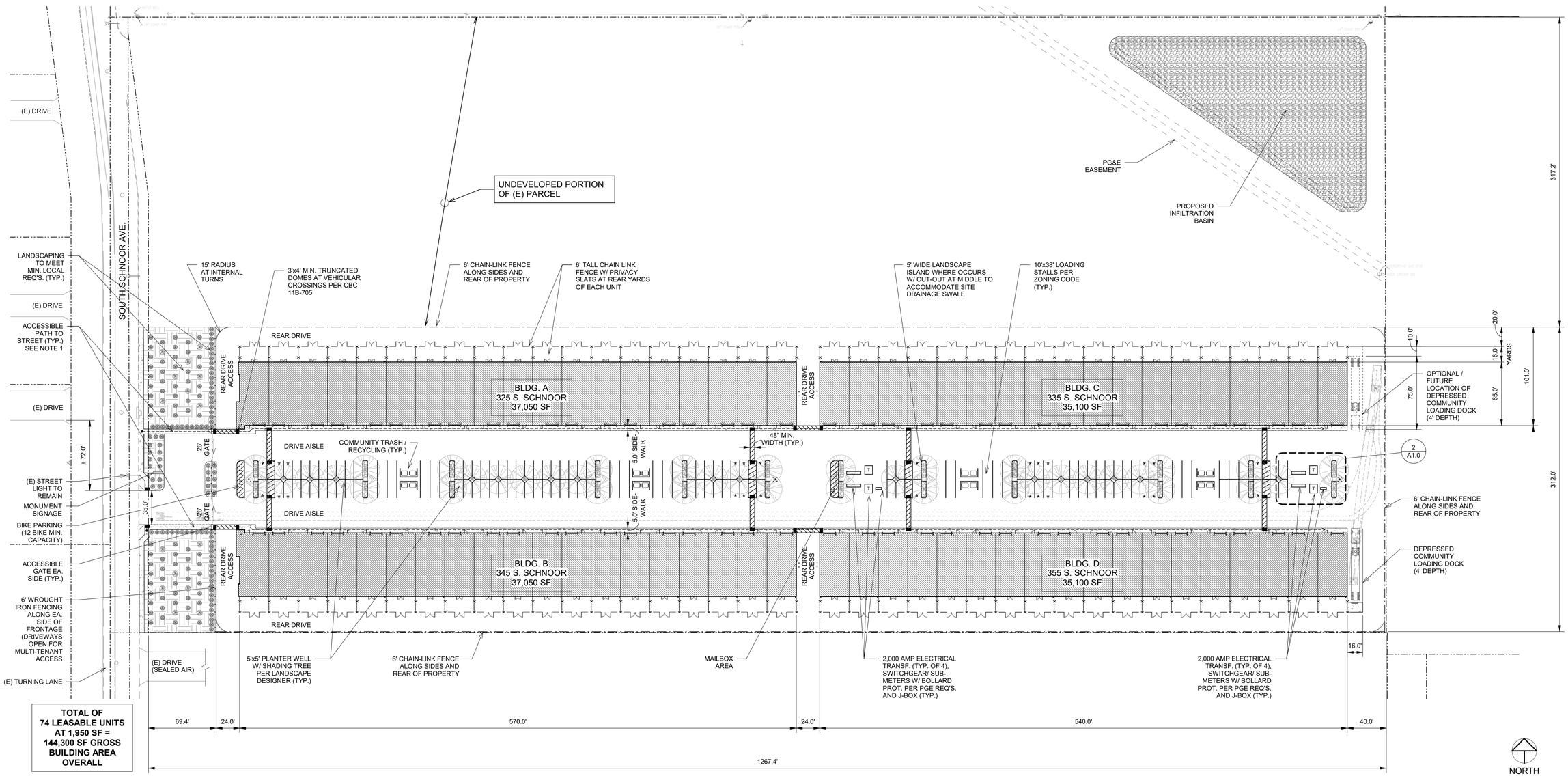

TOTAL OF 74 LEASABLE UNITS AT 1,950 SF = 144,300 SF GROSS BUILDING AREA OVERALL

1 / A1.0 SITE PLAN
1" = 50'-0"

DBKO DESIGN+BUILD
LIC#1032283

WHSE PARTNERS

DATE		REVISION	BY
11/17/2021	2	PLAN CHECK RESPONSE	
2/21/2022	3	PGE UPDATES	

ANY INFORMATION OR DATA ON THIS DRAWING IS NOT INTENDED TO BE SUITABLE FOR REUSE BY ANY PERSON, FIRM, CORPORATION, OR ANY OTHERS ON EXTENSIONS OF THIS PROJECT OR FOR ANY USE ON ANY OTHER PROJECT. ANY REUSE WITHOUT WRITTEN VERIFICATION AND ADAPTATION BY THE ENGINEER FOR THE SPECIFIC PURPOSE INTENDED WILL BE AT THE USER'S SOLE RISK AND WITHOUT LIABILITY OR LEGAL EXPOSURE TO THE ENGINEER.

SEAL
REGISTERED PROFESSIONAL ENGINEER
ROBERT A. TAMACCIO
S5607
STRUCTURAL
STATE OF CALIFORNIA
5/16/2022

SITE PLAN

LEASE FLEX. / WAREHOUSE BUILDINGS
FOR
MADERA INDUSTRIAL WHSE, LLC
S. SCHNOOR AVENUE, MADERA, CA

JOB NUMBER 21107
DESIGNED BY RT
DRAWN BY LM
DATE 9/17/2021
SHEET NUMBER A1.0

G:\Shared drives\DBKOmpany\PROJECTS\21106_WHSE Partners Projects\Plans, Cales & Specs\Arch-Struct (DBKO)\Drawings\Franco Property - Madera\21106_WP - Franco-Madera_2022-02-21.rvt
5/16/2022 5:01:41 PM

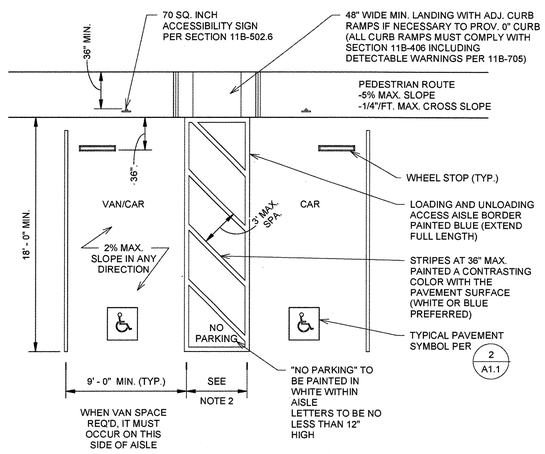

NOTES:

1. PLAN VIEW SHOWS MIN. REQUIREMENTS FOR DOUBLE PARKING STALLS IN ACCORDANCE WITH CBC 11B-502. SINGLE AND ANGLED STALLS TO COMPLY WITH APPROPRIATE FIG. 11B-502.2, 11B-502.3 AND 11B-502.4 OF THE CBC AS APPLICABLE.
2. LOADING/UNLOADING AISLE TO COMPLY WITH THE FOLLOWING MIN. WIDTHS:

   5' - 0" MIN. - TYP. ACCESSIBLE PARKING STALL
   8' - 0" MIN. - VAN ACCESSIBLE PARKING STALL

3. MIN. VERTICAL CLEARANCE OF 98 INCHES REQUIRED AT ACCESSIBLE SPACES AND ALONG A MIN. OF ONE VEHICLE ACCESS ROUTE TO SUCH SPACES FROM SITE ENTRANCES AND EXITS.
4. IDENTIFICATION OF EACH PARKING SPACE REQ'D PER SECTION 11B-502.6 AS FOLLOWED:

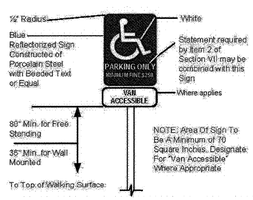

POST FOR SIGN TO BE 2" DIAMETER GALV. PIPE SET IN MIN. 12" DIAMETER CONCRETE TO A MIN. OF 24" BELOW GRADE. ALL ACCESSORIES / HARDWARE (I.E. CAP, CLAMPS, FASTENERS, ETC.) TO BE GALVANIZED.

IN ADDITION, A SIGN IS REQUIRED AT A CONSPICUOUS LOCATION AT EACH ENTRANCE TO OFF-STREET PARKING FACILITIES, OR IMMEDIATELY ADJACENT TO AND VISIBLE FROM EACH ACCESSIBLE STALL OR SPACE THE SIGN IS TO BE NO LESS THAN 17 INCHES WIDE BY 22 INCHES TALL IN SIZE WITH 1 INCH HIGH MINIMUM LETTERING STATING THE FOLLOWING:

UNAUTHORIZED VEHICLES PARKED IN DESIGNATED ACCESSIBLE SPACES NOT DISPLAYING DISTINGUISHING PLACARDS OR SPECIAL LICENSE PLATES ISSUED FOR PERSONS WITH DISABILITIES WILL BE TOWED AWAY AT THE OWNER'S EXPENSE. TOWED VEHICLES MAY BE RECLAIMED AT
*
OR BY TELEPHONING
*

* BLANK SPACES ARE TO BE FILLED IN WITH APPROPRIATE INFORMATION AS A PERMANENT PART OF THE SIGN

1 A1.1 TYPICAL ACCESSIBLE PARKING REQUIREMENTS
3/16" = 1'-0"

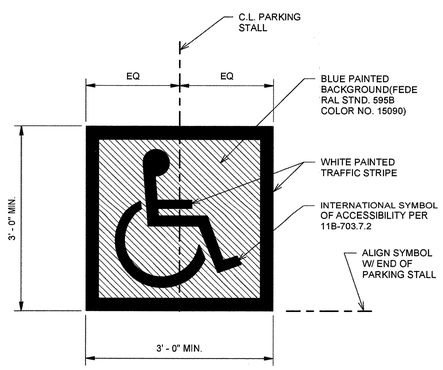

2 A1.1 PAVEMENT ACCESSIBLITY SYMBOL AT PARKING STALL
3/4" = 1'-0"

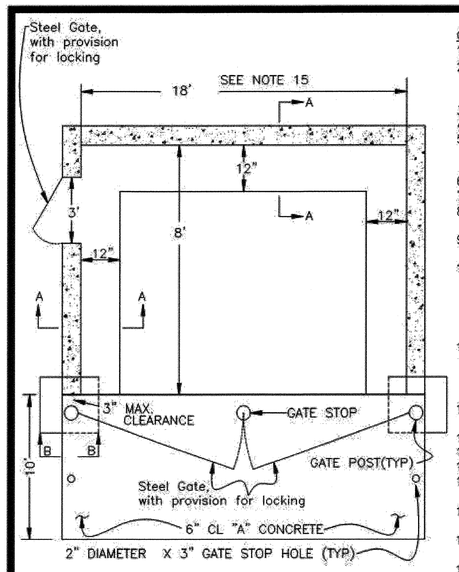

Plan View

General Notes:

1. The enclosure wall shall be six (6) feet high.
2. Enclosure require at least 50% of space designated for recycling. Allow a minimum of 18" between containers.
3. 3 or more units on residential require man door.
4. Grout all cells.
5. All masonry units shall comply with the latest adopted California Building Code and U.B.C. standard 24-4 Grade N.
6. All masonry walls shall be inspected by the City.
7. All masonry units shall be a minimum f'm=1500 psi.
8. Reinforcing steel shall be deformed bar, minimum Grade 40.
9. Footing concrete shall be a minimum 2500 psi at 28 days.
10. Mortar shall be type-S (minimum 1800 psi at 28 days.)
    One (1) part cement, Type-1.
    One-half (½) part lime putty or hydrated lime.
    Four and one-half (4½) parts sand (maximum).
11. Grout shall be a minimum 2000 psi at 28 days.
    One (1) part cement.
    Three (3) parts sand.
    Two (2) parts pea gravel.
12. Finish pad elevation to be flush with grade of access pavement.
13. Gate hinges shall be attached to the steel posts.
14. Solid gates are required on all enclosures.
15. 18' for two (2) bins.
16. Minimum specification for enclosure openings will be 7', not to be encumbered by gates or hinges.
17. All rebar must be tied at vertical and horizontal intersections.
18. Maintain minimum 3" clearance from steel to earth for cast-in-place footings.
19. Drawings not drawn to scale.
20. A pedestrian access, separate from primary service access is recommended.
21. Min 20" overlap for rebar. All splices joined with tie wire

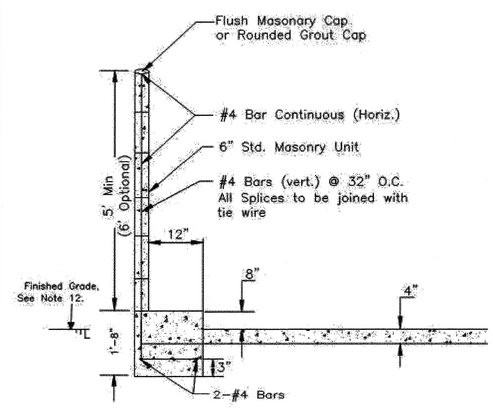

View "A-A"

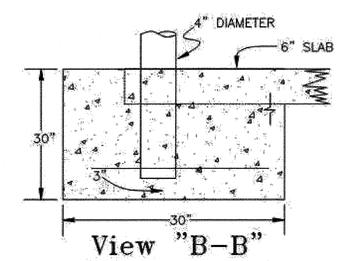

View "B-B"

Typical Section w/ Concrete Block Wall

2019CBC
City of Madera
Building Department
The approval of these plans does not prevent the City of Madera from requiring correction of errors or omissions in the plans, specifications or construction. Subject to field inspections and approval of the Codes and Ordinances.
APPROVED
By:
Date: MAR 03 2022

TYPICAL REFUSE CONTAINER ENCLOSURE DETAILS

REF. & REV.
MARCH 2005
AUG. 2008
APRIL 2010

CITY OF MADERA
E-7

DBKO DESIGN-BUILD
LIC#1102253

WHSE PARTNERS

DATE	REVISION	BY

ANY INFORMATION OR DATA ON THIS DRAWING IS NOT INTENDED TO BE SUITABLE FOR REUSE BY ANY PERSON, FIRM, CORPORATION, OR ANY OTHER ENTERPRISE ON ANOTHER PROJECT OR FOR ANY USE ON ANY OTHER PROJECT. ANY REUSE WITHOUT WRITTEN VERIFICATION AND ADAPTATION BY THE ENGINEER FOR THE SPECIFIC PURPOSE INTENDED WILL BE AT THE USER'S SOLE RISK AND WITHOUT LIABILITY OR LEGAL EXPOSURE TO THE ENGINEER.

SEAL
REGISTERED PROFESSIONAL ENGINEER
ROBERT A. TAMKOOD
S5607
STRUCTURAL
STATE OF CALIFORNIA
11/17/2021

MISC. SITE DETAILS

LEASE FLEX. / WAREHOUSE BUILDINGS
FOR
MADERA INDUSTRIAL WHSE, LLC
S. SCHNOOR AVENUE, MADERA, CA

JOB NUMBER	21107
DESIGNED BY	RT
DRAWN BY	LM
DATE	9/17/2021
SHEET NUMBER	A1.1

G:\Shared drives\DBKO\Company\PROJECTS\2019\A_WHSE Reviews-Fresno, CA\Plans, Codes & Specs\Arch-Shared (DBKO)\Drawings\Fresno Property - Madera\WHSE-BLDG\A_2021-09-13.rvt
11/22/2021 2:57:59 PM

TYP. FIRE SITE PLAN KEYNOTES:

01	FIRE LANE / FIRE TRUCK ACCESS PATH
02	NEW SITE FIRE HYDRANT W/ BOLLARD PROTECTION
03	(E) HYDRANT ALONG FRONTAGE ROADWAY
04	MIN. 28' RADIUS AT INSIDE OF FIRE ACCESS PATH
05	"NO PARKING / FIRE LANE SIGN" (SIZE AND HEIGHT PER APPLICABLE CITY STANDARDS) ALONG BOTH REAR DRIVES AND FRONT AND MIDDLE REAR ACCESS DRIVES AT 60' O.C. MAX. SPACING
06	FIRE SPRINKLER RISER / FIRE DEPT. CONN. (FDC) W/ BOLLARD PROTECTION
07	HAMMERHEAD TURN-AROUND FOR FIRE TRUCK MANEUVERABILITY
08	"NO PARKING / FIRE LANE" SIGN (SIZE AND HEIGHT PER APPLICABLE CITY STANDARDS) MOUNTED TO REAR/EAST FENCE AT 60' MAX. SPACING

MIN. FIRE FLOW AND HYDRANT REQUIREMENTS (CFC APPENDICES B & C):

FIRE FLOW AND DURATION BASED ON SUM OF BUILDING AREA = 144,576 SF (TYPE IIB CONSTRUCTION, FULLY SPRINKLERED)

PER CFC TABLE B105.2, FIRE FLOW = 25% OF 8,000 GPM = 2,000 GPM AT DURATION OF 2 HOURS (TABLE B105.1(2))

MIN. NUMBER OF HYDRANTS AT 2,000 GPM = MIN. 2 HYDRANTS AT 450x1.5 = 675 FT. MAX. SPACING (578 FT PROVIDED)

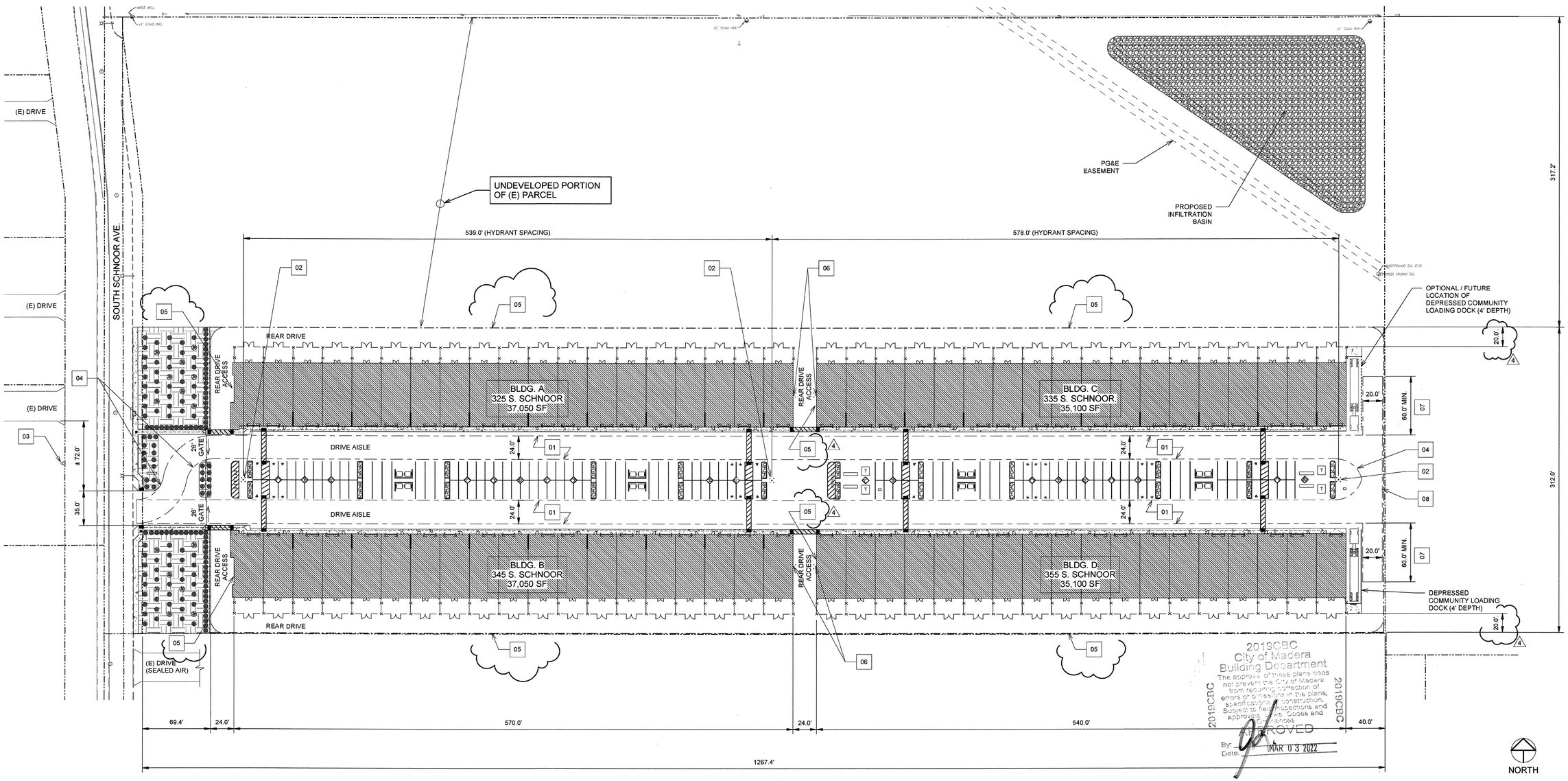

2019CBC
City of Madera
Building Department
The approval of these plans does not prevent the City of Madera from requiring correction of errors or omissions in the plans, specifications or construction. Subject to field inspections and approvals under the Codes and Ordinances.
APPROVED
By:
Date: MAR 03 2022

1 / A1.2 FIRE SITE PLAN
1" = 50'-0"

DBKO DESIGN-BUILD
WHSE PARTNERS

DATE	REVISION	BY
11/17/2021	2 PLAN CHECK RESPONSE	
2/28/2022	4 PC RESPONSE	

ANY INFORMATION OR DATA ON THIS DRAWING IS NOT INTENDED TO BE SUITABLE FOR REUSE BY ANY PERSON, FIRM, CORPORATION, OR ANY OTHERS ON EXTENSIONS OF THIS PROJECT OR FOR ANY USE ON ANY OTHER PROJECT. ANYONE WHO REUSES THE DOCUMENT WITHOUT WRITTEN VERIFICATION BY THE SPECIFIC PURPOSE INTENDED WILL BE AT THE USER'S SOLE RISK AND WITHOUT LIABILITY OR LEGAL EXPOSURE TO THE ENGINEER.

SEAL
REGISTERED PROFESSIONAL ENGINEER
ROBERT A. TAMKAO
S5607
STRUCTURAL
STATE OF CALIFORNIA
2/28/2022

FIRE SITE PLAN
LEASE FLEX. / WAREHOUSE BUILDINGS
FOR
MADERA INDUSTRIAL WHSE, LLC
S. SCHNOOR AVENUE, MADERA, CA

JOB NUMBER	21107
DESIGNED BY	RT
DRAWN BY	CD
DATE	11/17/2021
SHEET NUMBER	A1.2

G:\Shared drives\DBKO\Company\PROJECTS\2019_WHSE Partners Projects\Plans, Calcs & Specs\Arch-Struct (DBKO)\Drawings\Franco Property - Madera\20106 JVP - Franco-Madera_2022-02-21.rvt
2/28/2022 2:26:03 PM

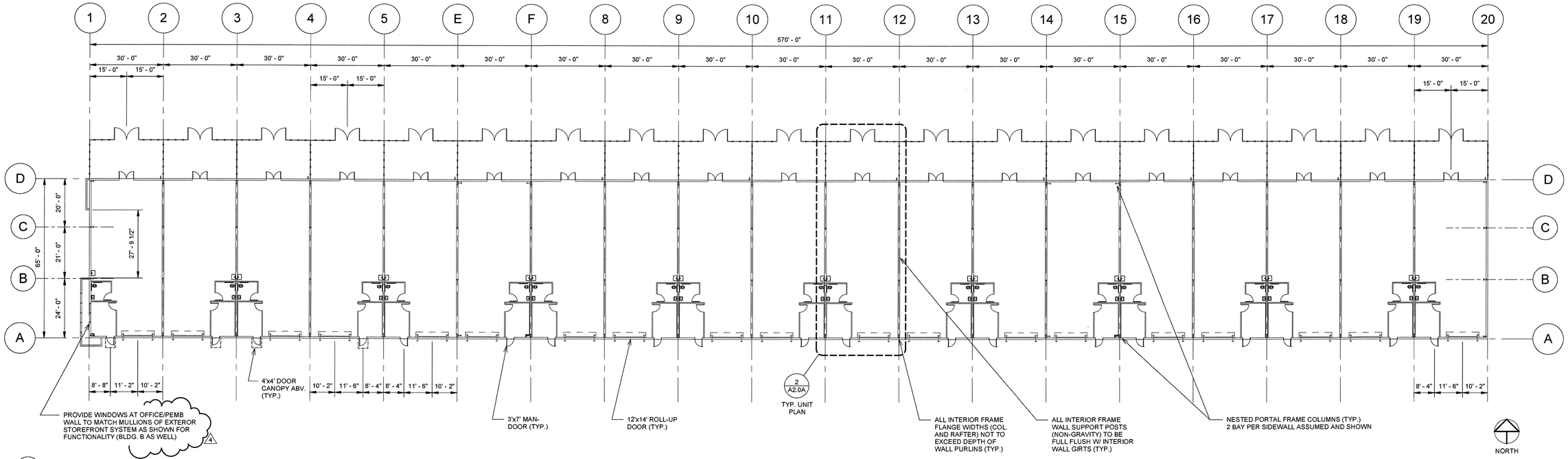

1 A2.0A FLOOR PLAN - BLDG. A
1" = 20'-0"

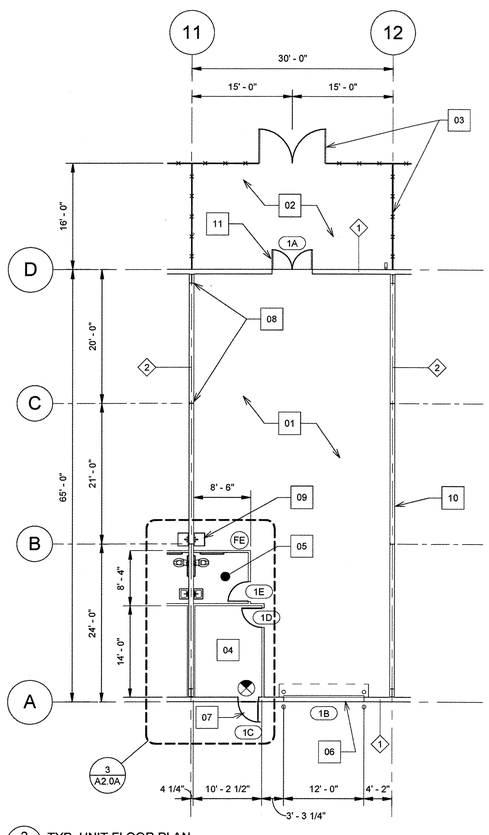

2 A2.0A TYP. UNIT FLOOR PLAN
3/32" = 1'-0"

FLOOR PLAN KEYNOTES

01	WAREHOUSE AREA W/ ROOF MOUNTED EVAP. COOLER AND SUSPENDED UNIT HEATER (CONSIDERED UNCONDITIONED SPACE DUE TO BTU'S) AND ONE (1) ROOF SKYLIGHT
02	EXTERIOR SECURED STORAGE AREA / YARD
03	CHAINLINK FENCE W/ PRIVACY SLATS (6' HEIGHT) AND DOUBLE LEAF (5' LEAFS) ACCESS GATE
04	OFFICE AREA (CONDITIONED)
05	ACCESSIBLE RESTROOM (W/ EXHAUST ONLY)
06	12'x14' ROLL-UP DOOR
07	3'x7' INSULATED DOOR W/ INTEGRAL HALF-LITE WINDOW W/ SECURITY GLAZING (WIRE REINFORCED)
08	TYP. METAL BLDG. COLUMN WHERE OCCURS
09	ACCESSIBLE STAINLESS STEEL HANDWASH SINK
10	INTERIOR METAL PEMB GIRTS W/ ONE (1) LAYER 5/8" DRYWALL EA. SIDE AND ACOUSTICAL INSULATION FULL HT.
11	6'x7" DOUBLE LEAF DOOR

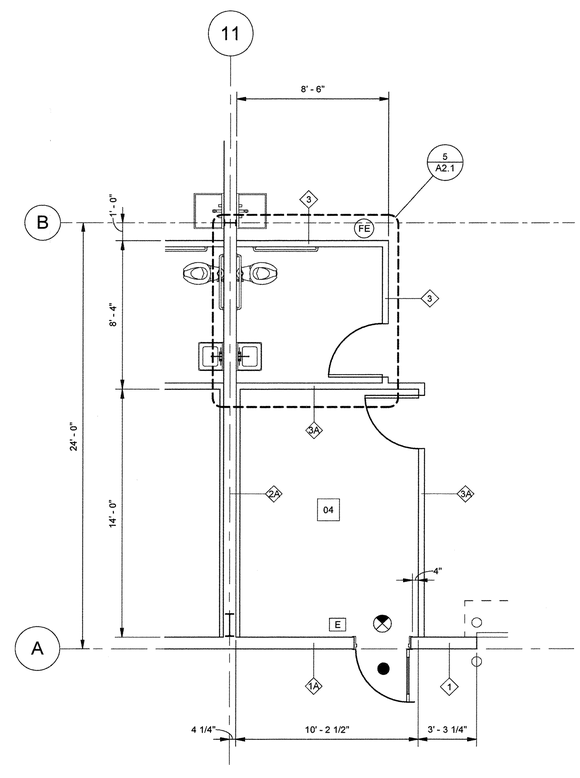

3 A2.0A TYP. ENLARGED PLAN AT OFFICE / RESTROOM
1/4" = 1'-0"

TYP. FLOOR PLAN NOTES:

1. WHERE SIGNAGE PROVIDED AT DOORS IDENTIFYING ROOM NAMES, FUNCTIONS, OR NUMBERS, PROVIDE ACCESSIBLE SIGNAGE PER 2/A6.0
2. UNLESS NOTED OTHERWISE, ALL DIMENSIONS ARE TO CENTER OF WALL, FACE OF STUD, OR BUILDING LINE AS SHOWN.
3. UNLESS NOTED OTHERWISE, ALL DOORS ARE TO BE LOCATED 4" MIN. FROM ADJACENT PERPENDICULAR WALLS (HINGE SIDE).

TYP. FLOOR PLAN LEGEND

- # — WALL PER 1/A6.0
- E — TACTILE "EXIT" SIGN PER 2/A6.0
- ILLUMINATED EXIT SIGN - FACE MOUNTED ON WALL ABOVE DOOR OR SUSPENDED FROM CEILING. SEE G1.0 FOR OTHER REQUIREMENTS
  - SOLID FILL INDICATES ORIENTATION OF TEXT FACE
- ILLUMINATED DIRECTIONAL EXIT SIGN - FACE MOUNTED ON WALL OR SUSPENDED FROM CEILING WITH DIRECTIONAL ARROW INDICATING DIRECTION TO EXIT. SEE G1.0 FOR OTHER REQUIREMENTS
- FE — PORTABLE FIRE EXTINGUISHER. SEE G1.0 FOR REQUIREMENTS.
- ● — EGRESS ILLUMINATION AT EXTERIOR LANDING EXIT (CBC 1006.3)

2019CBC City of Madera Building Department
The approval of these plans does not prevent the City of Madera from requiring correction of errors or omissions in the plans, specifications or construction. Submittal of reports and approvals shall be subject to Codes and Ordinances.
APPROVED
By:
Date: MAR 03 2022

DBKO DESIGN BUILD
WHSE PARTNERS

DATE	REVISION	BY
2/28/2022	4 PC RESPONSE	

ANY INFORMATION OR DATA ON THIS DRAWING IS NOT INTENDED TO BE SUITABLE FOR REUSE BY ANY PERSON, FIRM, CORPORATION, OR ANY OTHERS OR EXTENSIONS OF THIS PROJECT OR FOR ANY USE ON ANY OTHER PROJECT WITHOUT WRITTEN AUTHORIZATION BY THE ARCHITECT. ANY SUCH REUSE IS TO BE SPECIFIC PURPOSE INTENDED WILL BE AT THE USER'S SOLE RISK AND WITHOUT LIABILITY OR LEGAL EXPOSURE TO THE ENGINEER.

SEAL
REGISTERED PROFESSIONAL ENGINEER ROBERT A. TAMASCO S5607 STRUCTURAL STATE OF CALIFORNIA
2/28/2022

FLOOR PLAN - BLDG. A
LEASE FLEX. / WAREHOUSE BUILDINGS
FOR
MADERA INDUSTRIAL WHSE, LLC
S. SCHNOOR AVENUE, MADERA, CA

JOB NUMBER	21107
DESIGNED BY	RT
DRAWN BY	LM
DATE	9/17/2021
SHEET NUMBER	A2.0A

G:\Shared drives\DBKOCompany\PROJECTS\2107\06_WHSE Partners Projects\Plans, Calcs & Specs\Arch-Struct (DBKO)\Drawings\Fresno Property - Madera\WHSE-BLDGA_2022-01-31.rvt
2/28/2022 2:23:23 PM

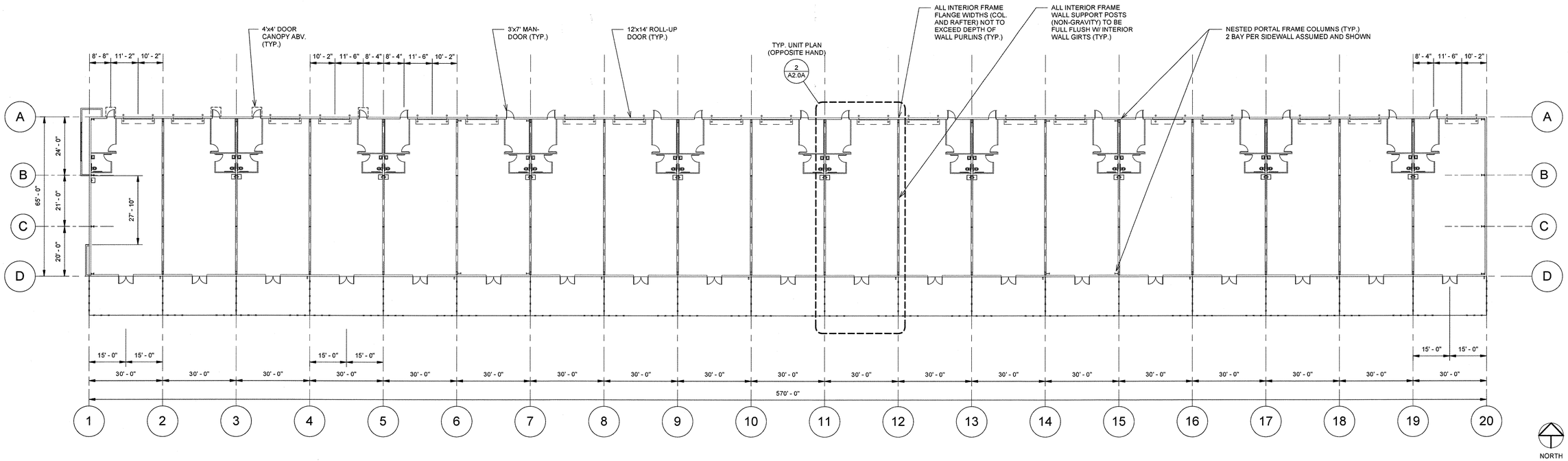

1 / A2.0B FLOOR PLAN - BLDG. B
1" = 20'-0"

2019CBC
City of Madera
Building Department
The approval of these plans does not prevent the City of Madera from requiring correction of errors or omissions in the plans, specifications or construction. Subject to field inspections and approvals under the Codes and Ordinances.
APPROVED
By:
Date: MAR 03 2022

DBKO
DESIGN-BUILD
UCF1032283

WHSE
PARTNERS

DATE	REVISION	BY

ANY INFORMATION OR DATA ON THIS DRAWING IS NOT INTENDED TO BE SUITABLE FOR REUSE BY ANY PERSON, FIRM, CORPORATION, OR ANY OTHER ON EXTENSIONS OF THIS PROJECT OR FOR ANY USE ON ANY OTHER PROJECT. ANY REUSE WITHOUT WRITTEN VERIFICATION AND ADAPTATION BY THE ENGINEER FOR THE SPECIFIC PURPOSE INTENDED WILL BE AT THE USER'S SOLE RISK AND WITHOUT LIABILITY OR LEGAL EXPOSURE TO THE ENGINEER.

SEAL
REGISTERED PROFESSIONAL ENGINEER
ROBERT A. TAMAOKI
S5607
STRUCTURAL
STATE OF CALIFORNIA
11/17/2021

FLOOR PLAN - BLDG. B

LEASE FLEX. / WAREHOUSE BUILDINGS
FOR
MADERA INDUSTRIAL WHSE, LLC
S. SCHNOOR AVENUE, MADERA, CA

JOB NUMBER	21107
DESIGNED BY	RT
DRAWN BY	LM
DATE	9/17/2021
SHEET NUMBER	A2.0B

G:\Shared drives\DBKO\Company\PROJECTS\01W_WHSE Partners\Fresno, CA\Plans, Cards & Spreadsh\In Street (DBKO)\Drawings\Fresno Property - Madera\WHSE-BLDGB_2021-09-13.rvt 11/22/2021 3:39:43 PM

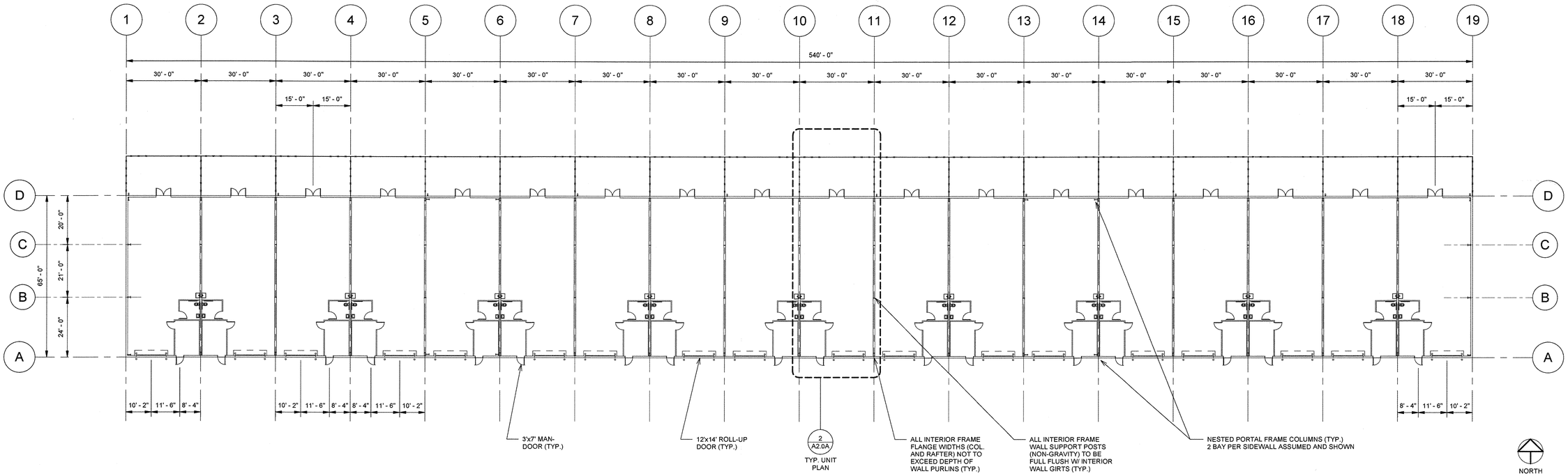

1 A2.0C FLOOR PLAN - BLDG. C
1" = 20'-0"

2019CBC
City of Madera
Building Department
The approval of these plans does not prevent the City of Madera from requiring correction of errors or omissions in the plans, specifications or construction. Subject to field inspections and approval of 2006 and 2009 codes
APPROVED
By:
Date: MAR 03 2022

DBKO DESIGN-BUILD
UCR1032263

WHSE PARTNERS

DATE	REVISION	BY

ANY INFORMATION OR DATA ON THIS DRAWING IS NOT INTENDED TO BE SUITABLE FOR REUSE BY ANY PERSON, FIRM OR CORPORATION FOR ANY PURPOSE OTHER THAN THE SPECIFIC PROJECT FOR WHICH IT WAS PREPARED. ANY REUSE WITHOUT WRITTEN VERIFICATION AND ADAPTATION BY THE ENGINEER FOR THE SPECIFIC PURPOSE INTENDED WILL BE AT THE USER'S SOLE RISK AND WITHOUT LIABILITY OR LEGAL EXPOSURE TO THE ENGINEER.

SEAL
REGISTERED PROFESSIONAL ENGINEER
ROBERT A. TAMACCIO
S5607
STRUCTURAL
STATE OF CALIFORNIA
11/17/2021

FLOOR PLAN - BLDG. C

LEASE FLEX. / WAREHOUSE BUILDINGS
FOR
MADERA INDUSTRIAL WHSE, LLC
S. SCHNOOR AVENUE, MADERA, CA

JOB NUMBER	21107
DESIGNED BY	RT
DRAWN BY	LM
DATE	9/17/2021
SHEET NUMBER	A2.0C

11/22/2021 1:28:18 PM
G:\Shared-Drives\DBKOrganizer\PROJECTS\21106_WHSE Partners-Fresno, CA\Plans, Calcs & Specs\Arch\Sheet (DBKO)\Drawings\Floor Plans\Property - Madera\WHSE-BLDG_C_2021-09-12.rvt

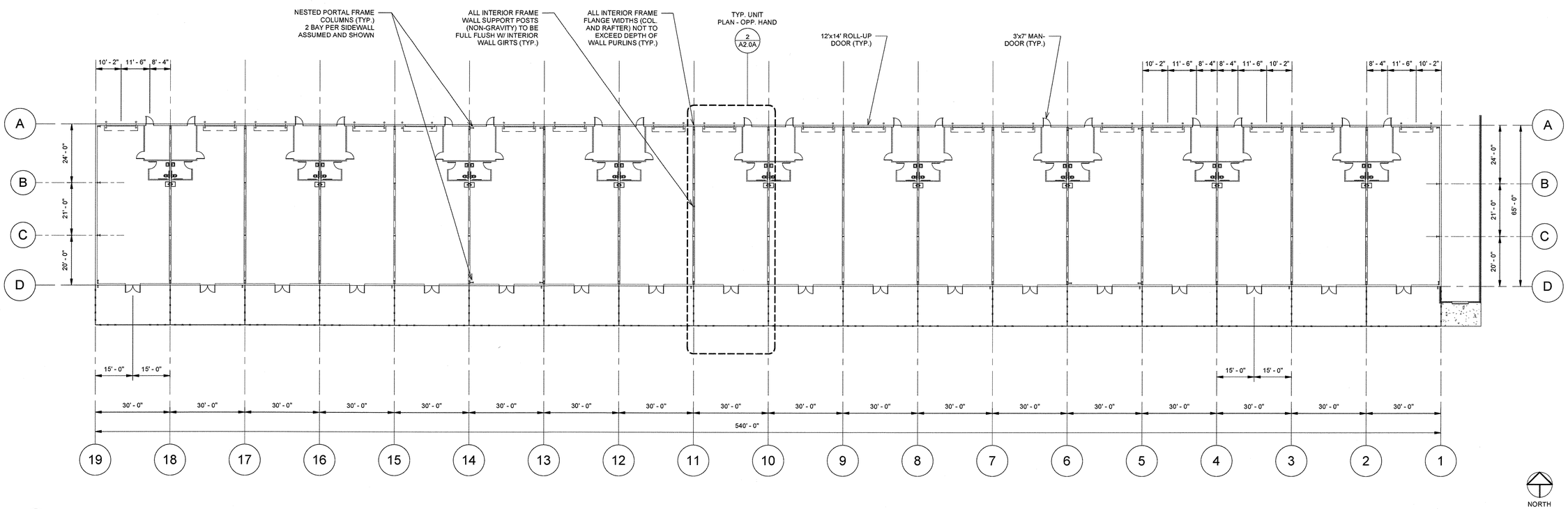

1 A2.0D FLOOR PLAN - BLDG. D
1" = 20'-0"

2019CBC
City of Madera
Building Department
The approval of these plans does not prevent the City of Madera from requiring correction of errors or omissions in the plans, specifications or construction. Subject to field inspections and approval. Title 24, CCR and ordinances.
APPROVED
By:
Date: MAR 03 2022

DBKO
DESIGN-BUILD
UCF100283

WHSE
PARTNERS

DATE	REVISION	BY

ANY INFORMATION OR DATA ON THIS DRAWING IS NOT INTENDED TO BE SUITABLE FOR REUSE BY ANY PERSON, PERSONS, CORPORATION, PARTNERSHIP, OR OTHER ENTITY ON OTHER PROJECTS OR EXTENSIONS OF THIS PROJECT. ANY REUSE WITHOUT WRITTEN VERIFICATION AND ADAPTATION BY THE ENGINEER FOR THE SPECIFIC PURPOSE INTENDED WILL BE AT THE USER'S SOLE RISK AND WITHOUT LIABILITY OR LEGAL EXPOSURE TO THE ENGINEER.

SEAL
REGISTERED PROFESSIONAL ENGINEER
ROBERT A. YAMAGUCHI
S5607
STRUCTURAL
STATE OF CALIFORNIA
11/17/2021

FLOOR PLAN - BLDG. D

LEASE FLEX. / WAREHOUSE BUILDINGS

FOR

MADERA INDUSTRIAL WHSE, LLC

S. SCHNOOR AVENUE, MADERA, CA

JOB NUMBER	21107
DESIGNED BY	RT
DRAWN BY	LM
DATE	9/17/2021
SHEET NUMBER	A2.0D

G:\Shared drives\DBKO\Company\PROJECTS\2019\0_WHSE Partners-Fresno, CA\Plans, Calcs & Specs\Arch\Struct\DBKO\Drawings\Fresno Property - Madera\WHSE-BLDGD_2021-10-12.rvt

11/22/2021 3:35:37 PM

ACCESSIBILE LAVATORY NOTES:

1. WATER SUPPLY AND DRAIN ARE TO BE WRAPPED OR OTHERWISE PROTECTED AGAINST CONTACT AT LAVATORY.
2. FAUCET CONTROLS ARE TO COMPLY WITH 11B-309. HAND-OPERATED METERING FAUCETS ARE TO REMAIN OPEN FOR 10 SECONDS MIN.
3. WHEN ADJACENT TO A SIDEWALL OR PARTITION, LAVATORIES ARE TO BE A MINIMUM 18" CLEAR MEASURED FROM THE CL OF THE FIXTURE.

PROVIDE BLK'G IN WALLS FOR ALL ACCESSORY MOUNTING AS REQ'D BY MANF.

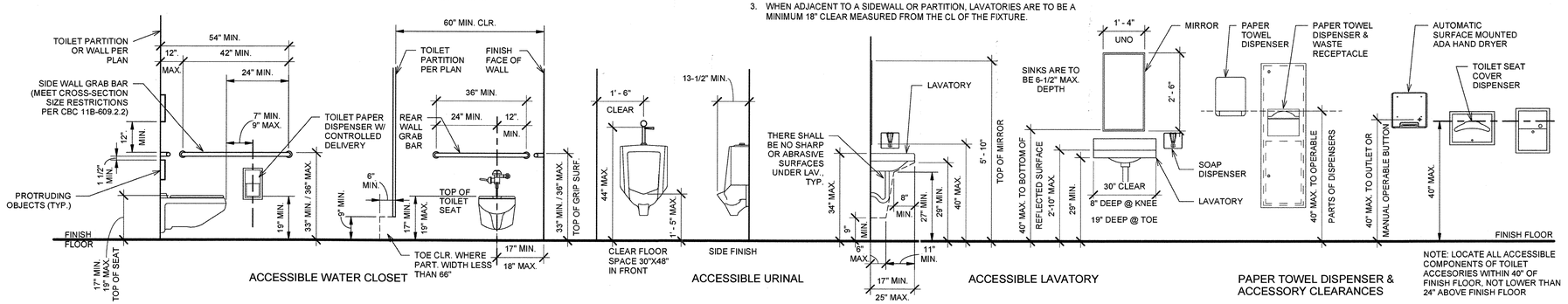

1 / A2.1 TYPICAL ACCESSIBLE FIXTURE MOUNTING
1/2" = 1'-0"

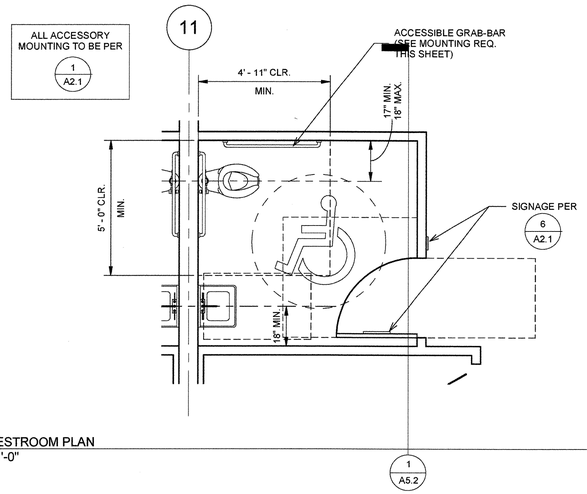

5 / A2.1 TYP. RESTROOM PLAN
3/8" = 1'-0"

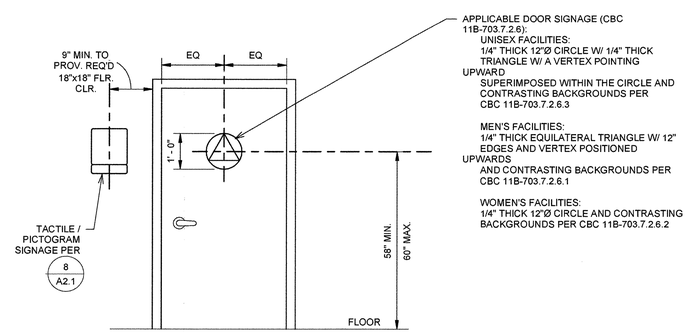

6 / A2.1 RESTROOM SIGNAGE
1/2" = 1'-0"

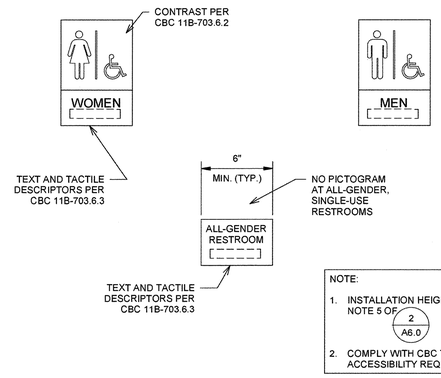

8 / A2.1 RESTROOM TACTILE SIGNAGE
2" = 1'-0"

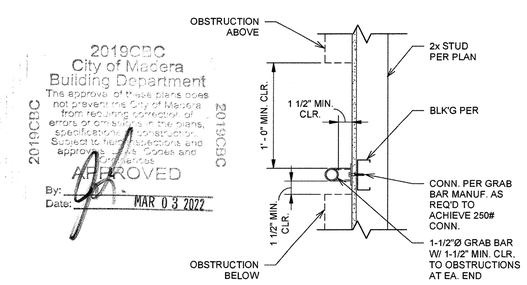

12 / A2.1 GRAB BAR DETAIL
1 1/2" = 1'-0"

2019CBC
City of Madera
Building Department
This approval of these plans does not prevent the City of Madera from requiring correction of errors or omissions in the plans, specifications or construction. Subject to field inspections and approval of Codes and ordinances.
APPROVED
By:
Date: MAR 03 2022

DBKO DESIGN-BUILD
WHSE PARTNERS

REVISION	DATE	BY

ANY INFORMATION OR DATA ON THIS DRAWING IS NOT INTENDED TO BE SUITABLE FOR REUSE BY ANY PERSON, FIRM OR CORPORATION FOR ANY OTHER PROJECT OR EXTENSION TO THIS PROJECT. ANY REUSE WITHOUT WRITTEN VERIFICATION AND ADAPTATION BY THE ENGINEER FOR THE SPECIFIC PURPOSE INTENDED WILL BE AT THE USER'S SOLE RISK AND WITHOUT LIABILITY OR LEGAL EXPOSURE TO THE ENGINEER.

SEAL
REGISTERED PROFESSIONAL ENGINEER ROBERT A. TAMKOOD S5607 STRUCTURAL STATE OF CALIFORNIA
11/17/202

TYPICAL ACCESSIBLE RESTROOM DETAILS

LEASE FLEX. / WAREHOUSE BUILDINGS
FOR
MADERA INDUSTRIAL WHSE, LLC
S. SCHNOOR AVENUE, MADERA, CA

JOB NUMBER	21107
DESIGNED BY	RT
DRAWN BY	LM
DATE	9/17/2021
SHEET NUMBER	A2.1

G:\Shared drives\DBKO\Company\PROJECTS\21106_WHSE Partners-Fresno, CA\Plans, Calcs & Specs\Arch\Sheet\DBKO\Drawings\Lease-Property - Madera\WHSE-BLDG\A_2021-09-12.rvt
11/22/2021 3:58:09 PM

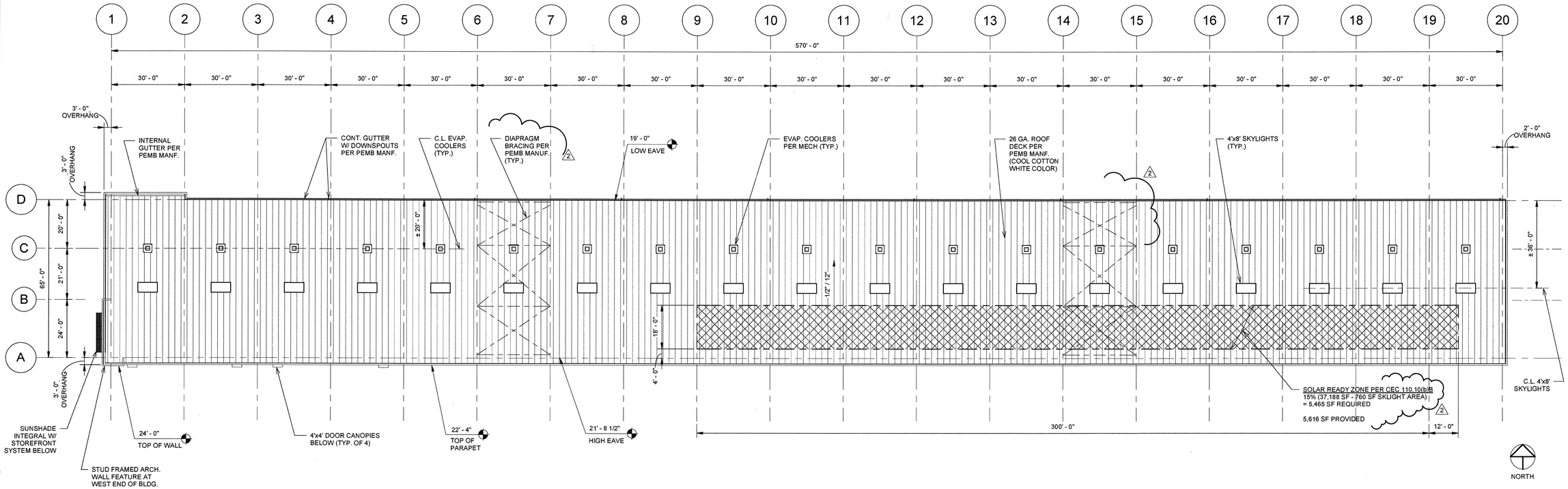

1 A3.0A ROOF PLAN - BLDG. A
1" = 20'-0"

2019CBC
City of Madera
Building Department
The approval of these plans does not prevent the City of Madera from requiring correction of errors or omissions in the plans, specifications or construction. Subject to field inspections and approval of plans. Codes and Ordinances
APPROVED
By:
Date: MAR 03 2022

DBKO DESIGN-BUILD
UCH102263

WHSE PARTNERS

DATE	REVISION	BY
11/17/2021	2 PLAN CHECK RESPONSE	

ANY INFORMATION OR DATA ON THIS DRAWING IS NOT INTENDED TO BE SUITABLE FOR REUSE BY ANY PERSON, FIRM OR CORPORATION FOR ANY PURPOSE OTHER THAN THE SPECIFIC PROJECT FOR WHICH IT WAS PREPARED AND PUBLISHED. ANY REUSE WITHOUT WRITTEN VERIFICATION AND ADAPTATION BY THE ENGINEER FOR THE SPECIFIC PURPOSE INTENDED WILL BE AT THE USER'S SOLE RISK AND WITHOUT LIABILITY OR LEGAL EXPOSURE TO THE ENGINEERS.

SEAL
REGISTERED PROFESSIONAL ENGINEER
ROBERT A. TAMAZOO
S5607
STRUCTURAL
STATE OF CALIFORNIA
11/17/2021

ROOF PLAN - BLDG. A

LEASE FLEX. / WAREHOUSE BUILDINGS
FOR
MADERA INDUSTRIAL WHSE, LLC
S. SCHNOOR AVENUE, MADERA, CA

JOB NUMBER	21107
DESIGNED BY	RT
DRAWN BY	LM
DATE	9/17/2021
SHEET NUMBER	A3.0A

G:\Shared drives\DBKO\Company\PROJECTS\2021\0_WHSE Schnoor Fresno, CA\Plans, Calcs & Specs\Arch\Shell_DBKO\Drawings\Fresno Property - Madera\WHSE-BLDG-A_2021-09-12.rvt
11/22/2021 2:58:07 PM

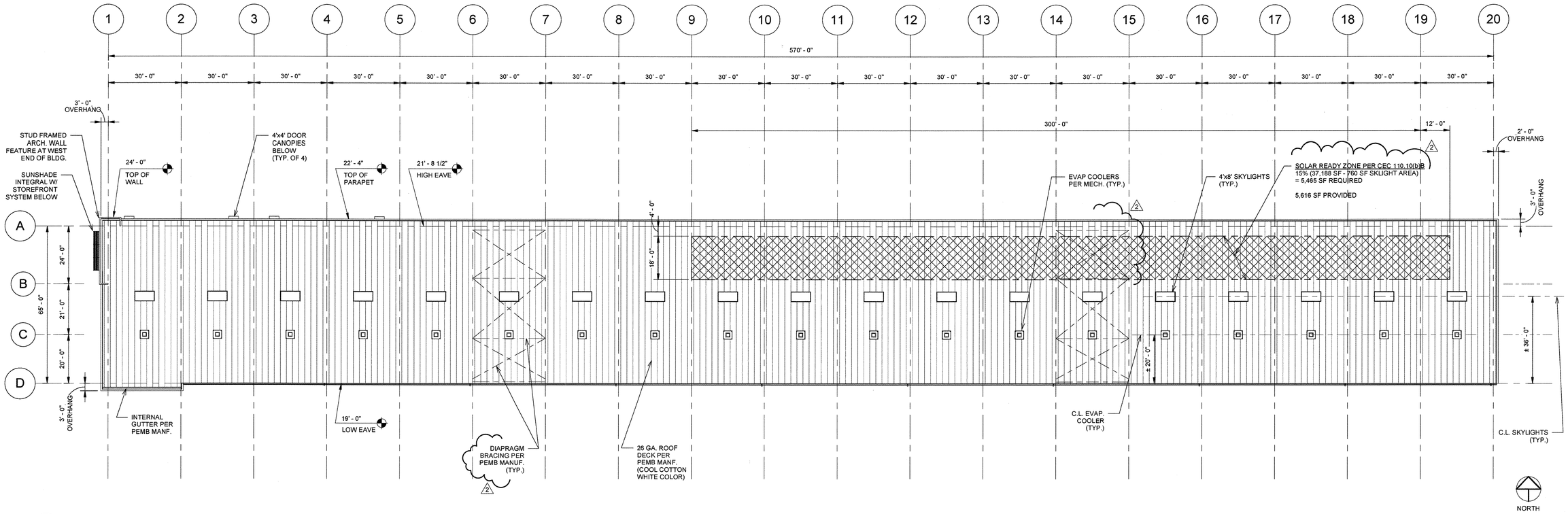

1 A3.0B ROOF PLAN - BLDG. B
1" = 20'-0"

2019CBC
City of Madera
Building Department
The approval of these plans does not prevent the City of Madera from requiring correction of errors or omissions in the plans, specifications or construction. Subject to field inspections and approvals under laws, Codes and Ordinances.
APPROVED
By:
Date: MAR 0 3 2022

DBKO DESIGN-BUILD
LIC#1032283

WHSE PARTNERS

DATE	REVISION	BY
11/17/2021	2 PLAN CHECK RESPONSE	

ANY INFORMATION OR DATA ON THIS DRAWING IS NOT INTENDED TO BE SUITABLE FOR REUSE BY ANY PERSON, FIRM, CORPORATION, OR ANY OTHERS ON EXTENSIONS OF THIS PROJECT OR FOR ANY USE ON ANY OTHER PROJECT. ANY REUSE WITHOUT WRITTEN VERIFICATION AND ADAPTATION BY THE ENGINEER FOR THE SPECIFIC PURPOSE INTENDED WILL BE AT THE USER'S SOLE RISK AND WITHOUT LIABILITY OR LEGAL EXPOSURE TO THE ENGINEER.

SEAL
REGISTERED PROFESSIONAL ENGINEER
ROBERT A. TAMKOCO
S5607
STRUCTURAL
STATE OF CALIFORNIA
11/17/2021

ROOF PLAN - BLDG. B

LEASE FLEX. / WAREHOUSE BUILDINGS
FOR
MADERA INDUSTRIAL WHSE, LLC
S. SCHNOOR AVENUE, MADERA, CA

JOB NUMBER	21107
DESIGNED BY	RT
DRAWN BY	LM
DATE	9/17/2021
SHEET NUMBER	A3.0B

G:\Shared drives\DBKO\Company\PROJECTS\2019_WHSE\Madera-Fresno, CA\Plan, Cities & Specs\Arch-Shell (DBKO)\Drawings\Fresno Property - Maderaarchitect\A3.0B_2021-09-17.rvt
11/22/2021 3:36:45 PM

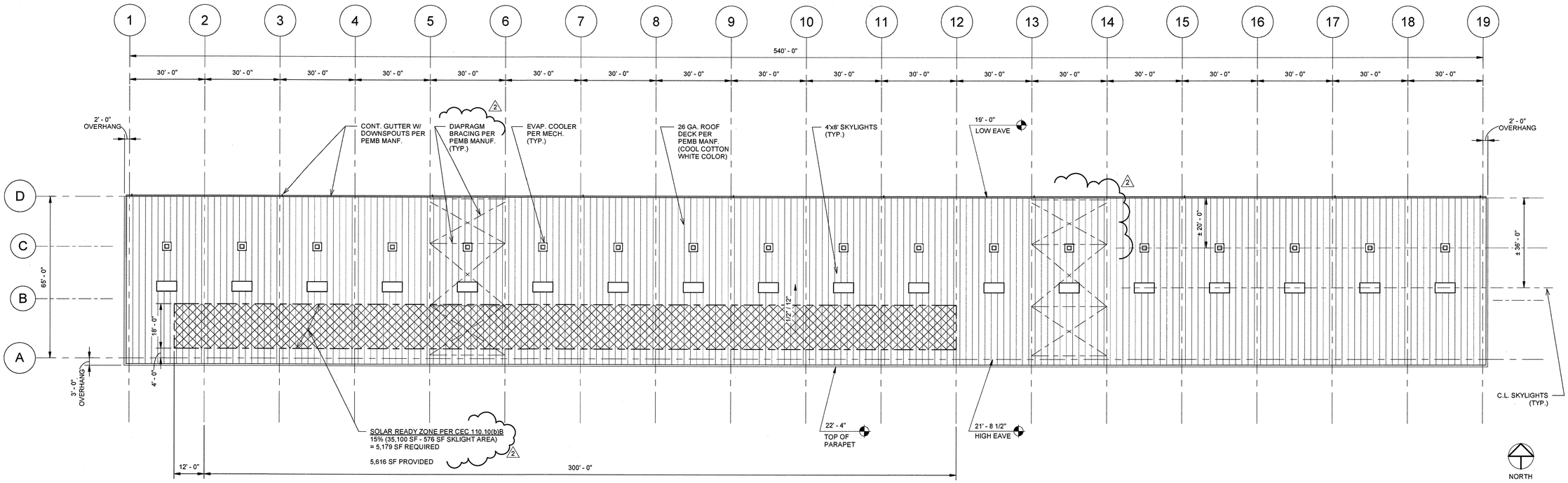

1 A3.0C ROOF PLAN - BLDG. C
1" = 20'-0"

2019CBC
City of Madera
Building Department
The approval of these plans does not prevent the City of Madera from requiring correction of errors or omissions in the plans, specifications or construction. Subject to field inspections and approval of plans. Codes and ordinances.
APPROVED
By:
Date: MAR 03 2022

DBKO
DESIGN-BUILD
UCR1002203

WHSE
PARTNERS

DATE	REVISION	BY
11/17/2021	2 PLAN CHECK RESPONSE	

ANY INFORMATION OR DATA ON THIS DRAWING IS NOT INTENDED TO BE SUITABLE FOR REUSE BY ANY PERSON, FIRM, OR CORPORATION, WITHOUT WRITTEN VERIFICATION AND ADAPTATION BY THE ENGINEER FOR THE SPECIFIC PROJECT. ANY REUSE WITHOUT WRITTEN VERIFICATION AND ADAPTATION BY THE ENGINEER FOR THE SPECIFIC PURPOSE INTENDED WILL BE AT THE USER'S SOLE RISK AND WITHOUT LIABILITY OR LEGAL EXPOSURE TO THE ENGINEER.

SEAL
REGISTERED PROFESSIONAL ENGINEER
ROBERT A. TAMACDO
S5607
STRUCTURAL
STATE OF CALIFORNIA
11/17/2021

ROOF PLAN - BLDG. C

LEASE FLEX. / WAREHOUSE BUILDINGS
FOR
MADERA INDUSTRIAL WHSE, LLC
S. SCHNOOR AVENUE, MADERA, CA

JOB NUMBER	21107
DESIGNED BY	RT
DRAWN BY	LM
DATE	9/17/2021
SHEET NUMBER	A3.0C

G:\Shared drives\DBKO\Company\PROJECTS\0110_WHSE Partners-Fresno, CA\Plans, Calcs & Specs\Arch\Revit (DBKO)\Drawings\Fresno Property - Madera\WHSE-BLDG_2021-09-12.rvt

11/22/2021 3:38:20 PM

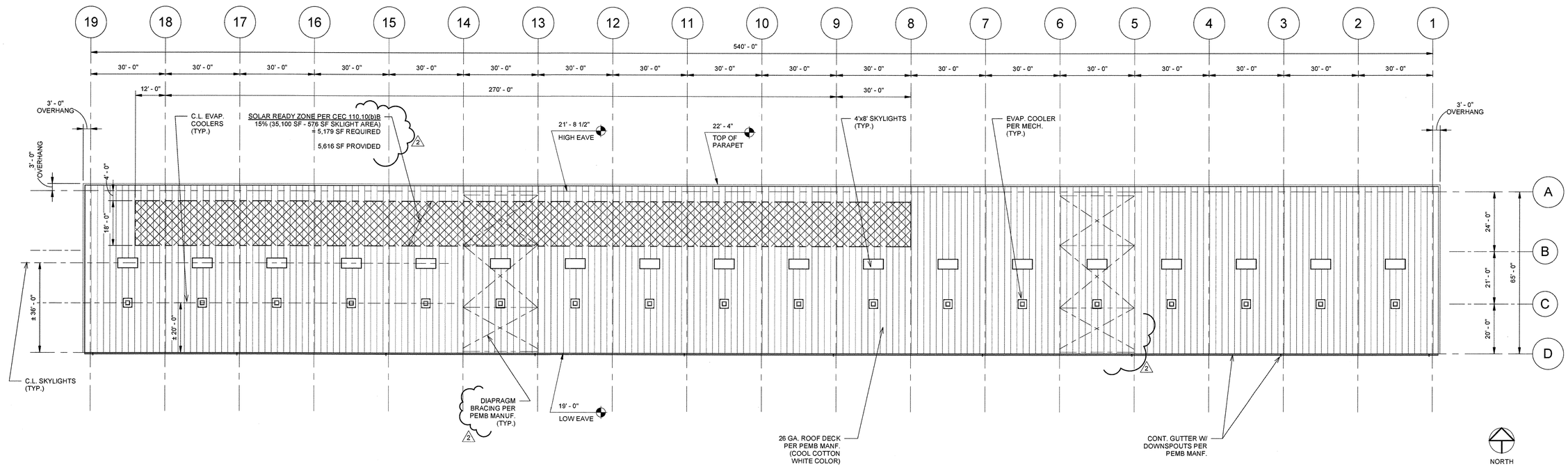

1 A3.0D ROOF PLAN - BLDG. D
1" = 20'-0"

2019CBC
City of Madera
Building Department
The approval of these plans does not prevent the City of Madera from requiring correction of errors or omissions in the plans, specifications or construction. Subject to field inspections and approval of all Codes and ordinances
APPROVED
By:
Date: MAR 03 2022

DBKO
DESIGN-BUILD
LIC#1032203

WHSE
PARTNERS

DATE	REVISION	BY
11/17/2021	2 PLAN CHECK RESPONSE	

ANY INFORMATION OR DATA ON THIS DRAWING IS NOT INTENDED TO BE SUITABLE FOR REUSE BY ANY PERSON, FIRM OR CORPORATION, OR ANY OTHER PROJECT EXCEPT THE PROJECT FOR WHICH IT WAS PREPARED, THIS PROJECT. ANY REUSE WITHOUT WRITTEN VERIFICATION AND ADAPTATION BY THE ENGINEER FOR THE SPECIFIC PURPOSE INTENDED WILL BE AT THE USER'S SOLE RISK AND WITHOUT LIABILITY OR LEGAL EXPOSURE TO THE ENGINEER.

SEAL
REGISTERED PROFESSIONAL ENGINEER
ROBERT A. TAMAGOD
S5607
STRUCTURAL
STATE OF CALIFORNIA
11/17/2021

ROOF PLAN - BLDG. D

LEASE FLEX. / WAREHOUSE BUILDINGS
FOR
MADERA INDUSTRIAL WHSE, LLC
S. SCHNOOR AVENUE, MADERA, CA

JOB NUMBER	21107
DESIGNED BY	RT
DRAWN BY	LM
DATE	9/17/2021
SHEET NUMBER	A3.0D

G:\Shared drives\DBKO\projects\PROJECTS\2019_WHSE\ Fresno-Fresno, CA\Plans, Cities & Specs\Ave-Shoot (DBKO)\Design\Fresno Property - Modesto\WHSE-BLDG_D\21-10-13.rvt
11/22/2021 3:35:40 PM

ELEVATION KEYNOTES

01	24 GA. R-PANEL ROOF DECK BY PEMB MANUF. (COOL ROOF / WHITE COLOR TO MEET T24 ENERGY CODE AS APPLICABLE)
02	GUTTER AND DOWNSPOUT PER PEMB MANUFACTURER (COLOR TO MATCH WALL PANELS)
03	PROJECTED FACADE 26 GA. R-PANEL PER PEMB MANUFACTURER (STANDARD BLUE COLOR PER MANUFACTURER)
04	12'x14' OVERHEAD DOORS - STANDARD GREY COLOR
05	3'x7' WALK-DOOR / ENTRANCE (PAINTED BLUE COLOR TO MATCH BLDG. FACADE PANEL)
06	REVERSE RIB 26 GA. R-PANEL AT ALL EXTERIOR WALLS PER PEMB MANUF. (STANDARD GREY COLOR)
07	ROOF SLOPE BEYOND (1/2" / FT.)
08	6' TALL CHAINLINK FENCE AT YARDS W/ PRIVACY SLATS
09	DOUBLE-LEAF 10' WIDE ACCESS IN CHAIN LINK FENCE AT YARDS
10	NEW 4"Øx4'-0" SAFETY BOLLARD (PAINTED SAFETY YELLOW)
11	ROOFTOP MOUNTED EVAPORATIVE COOLING UNIT FOR SHOP / WAREHOUSE AREA
12	(1) 4'x8' SKY-LIGHT EACH UNIT
13	BACK-LIGHT BUILDING SIGNAGE (UNDER SEPARATE PERMIT)
14	ARCH. WALL LIGHT
15	LED WALL PACK FOR SITE LIGHTING AS REQ'D. PER ELECTRICAL ENGINEER
16	DOOR CANOPY (TYP. OF 4)
17	OPAQUE STOREFRONT SYSTEM W/ INTEGRAL SUNSHADE (2)
18	HORIZONTAL RIBBED PANEL

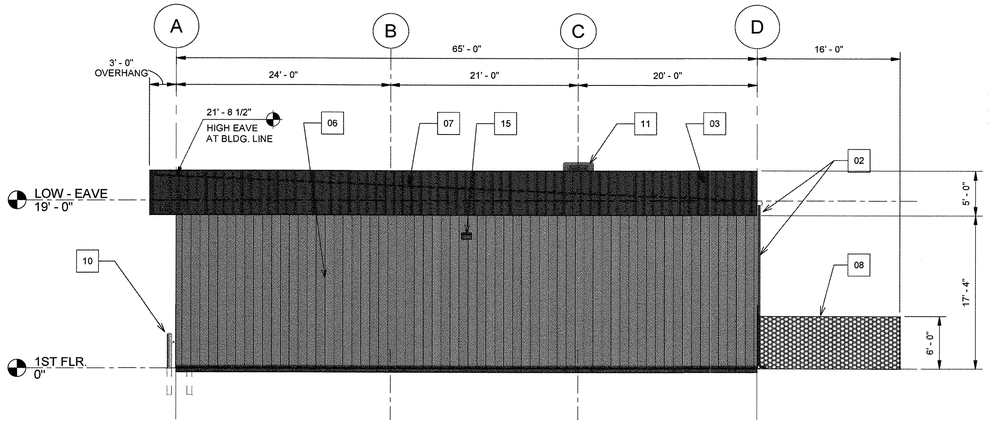

1 (A5.0A) BLDG A - EAST ELEVATION
1/8" = 1'-0"

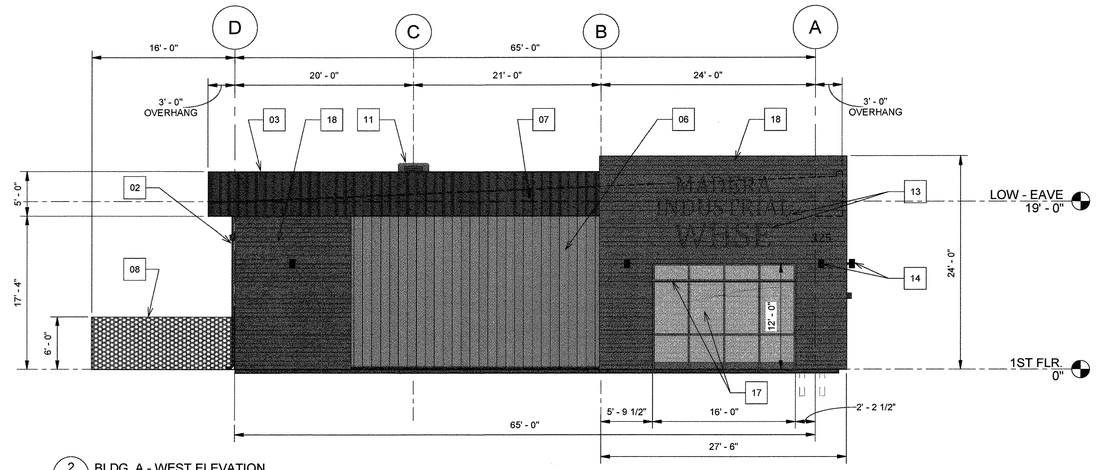

2 (A5.0A) BLDG. A - WEST ELEVATION
1/8" = 1'-0"

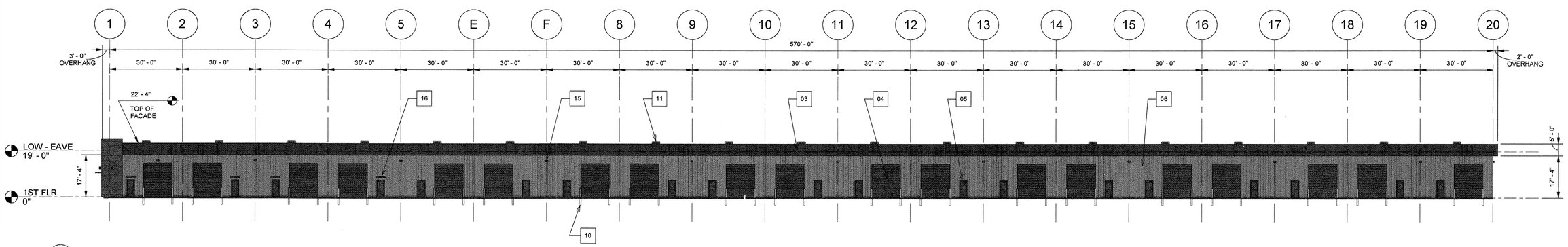

3 (A5.0A) BLDG. A - SOUTH ELEVATION
1" = 20'-0"

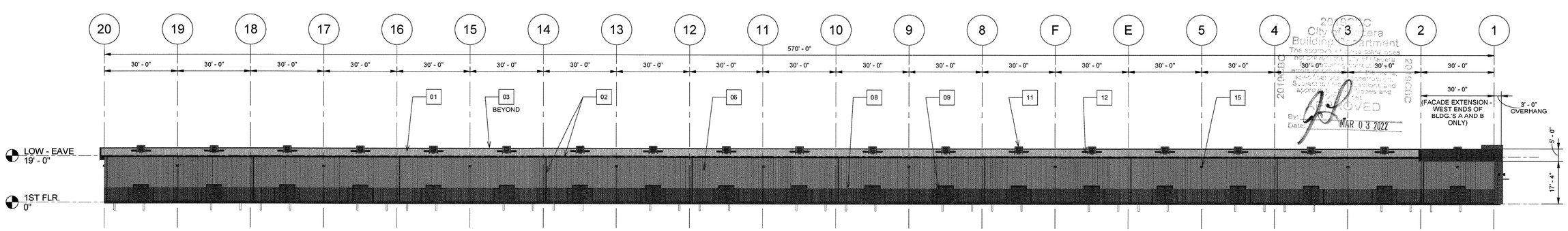

4 (A5.0A) BLDG A - NORTH ELEVATION
1" = 20'-0"

2019 CBC
City of Madera
Building Department
The approval of these plans does not permit the violation of any of the provisions of the Codes and other laws and ordinances governing construction, occupancy, maintenance, and approval of these plans and specifications.
APPROVED
By:
Date: MAR 03 2022
2019 CBC

DBKO DESIGN-BUILD
WHSE PARTNERS

DATE	REVISION	BY
11/17/2021	2 PLAN CHECK RESPONSE	

ANY INFORMATION OR DATA ON THIS DRAWING IS NOT INTENDED TO BE SUITABLE FOR REUSE BY ANY PERSON, FIRM, OR CORPORATION ON OTHER PROJECTS OR ADDITIONS TO THIS PROJECT, OR ON ANY OTHER PROJECT. ANY REUSE WITHOUT WRITTEN VERIFICATION AND ADAPTATION BY THE ENGINEER FOR THE SPECIFIC PURPOSE INTENDED WILL BE AT THE USER'S SOLE RISK AND WITHOUT LIABILITY OR LEGAL EXPOSURE TO THE ENGINEERS.

SEAL
REGISTERED PROFESSIONAL ENGINEER ROBERT A. TAMACCO S5607 STRUCTURAL STATE OF CALIFORNIA
11/17/2021

EXTERIOR ELEVATIONS - BLDG. A

LEASE FLEX. / WAREHOUSE BUILDINGS
FOR
MADERA INDUSTRIAL WHSE, LLC
S. SCHNOOR AVENUE, MADERA, CA

JOB NUMBER	21107
DESIGNED BY	RT
DRAWN BY	LM
DATE	9/17/2021
SHEET NUMBER	A5.0A

G:\Shared drives\DBKO\Projects\PROJECTS\2021\06_WHSE\ Partners-Fresno, Ca\Plans, Cals & Specs\Arch-Shell (DBKO)\Drawings\Fresno Property - Madera\WHSE-BLDG-A_2021-09-17.rvt
12/6/2021 11:06:05 PM

ELEVATION KEYNOTES

01	24 GA. R-PANEL ROOF DECK BY PEMB MANUF. (COOL ROOF / WHITE COLOR TO MEET T24 ENERGY CODE AS APPLICABLE)
02	GUTTER AND DOWNSPOUT PER PEMB MANUFACTURER (COLOR TO MATCH WALL PANELS)
03	PROJECTED FACADE 26 GA. R-PANEL PER PEMB MANUFACTURER (STANDARD BLUE COLOR PER MANUFACTURER)
04	12'x14' OVERHEAD DOORS - STANDARD GREY COLOR
05	3'x7' WALK-DOOR / ENTRANCE (PAINTED BLUE COLOR TO MATCH BLDG. FACADE PANEL)
06	REVERSE RIB 26 GA. R-PANEL AT ALL EXTERIOR WALLS PER PEMB MANUF. (STANDARD GREY COLOR)
07	ROOF SLOPE BEYOND (1/2" / FT.)
08	8' TALL CHAINLINK FENCE AT YARDS W/ PRIVACY SLATS
09	DOUBLE-LEAF 10' WIDE ACCESS IN CHAIN LINK FENCE AT YARDS
10	NEW 4"Øx4'-0" SAFETY BOLLARD (PAINTED SAFETY YELLOW)
11	ROOFTOP MOUNTED EVAPORATIVE COOLING UNIT FOR SHOP / WAREHOUSE AREA
12	(1) 4'x8' SKY-LIGHT EACH UNIT
13	BACK-LIGHT BUILDING SIGNAGE
14	ARCH. WALL LIGHT
15	LED WALL PACK FOR SITE LIGHTING AS REQ'D. PER ELECTRICAL ENGINEER
16	DOOR CANOPY (TYP. OF 4)
17	OPAQUE STOREFRONT SYSTEM W/ INTEGRAL SUNSHADE (2)
18	HORIZONTAL RIBBED PANEL

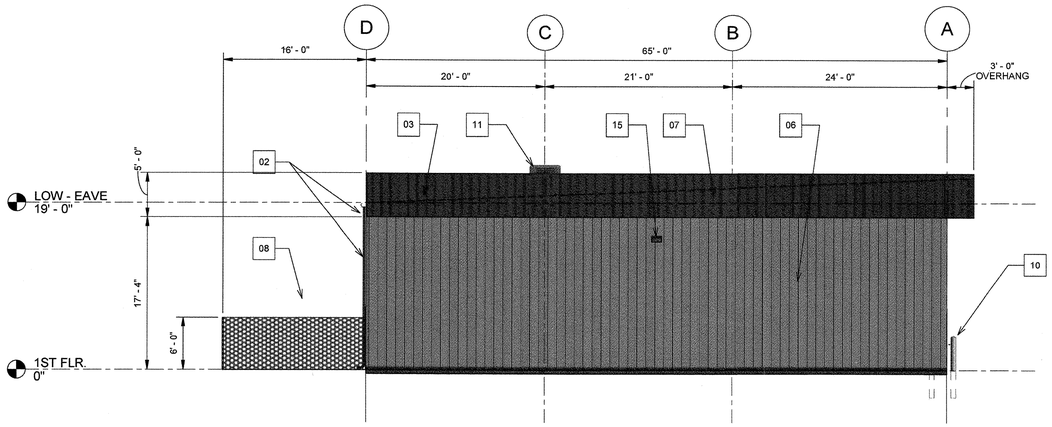

1 (A5.0B) BLDG B - EAST ELEVATION
1/8" = 1'-0"

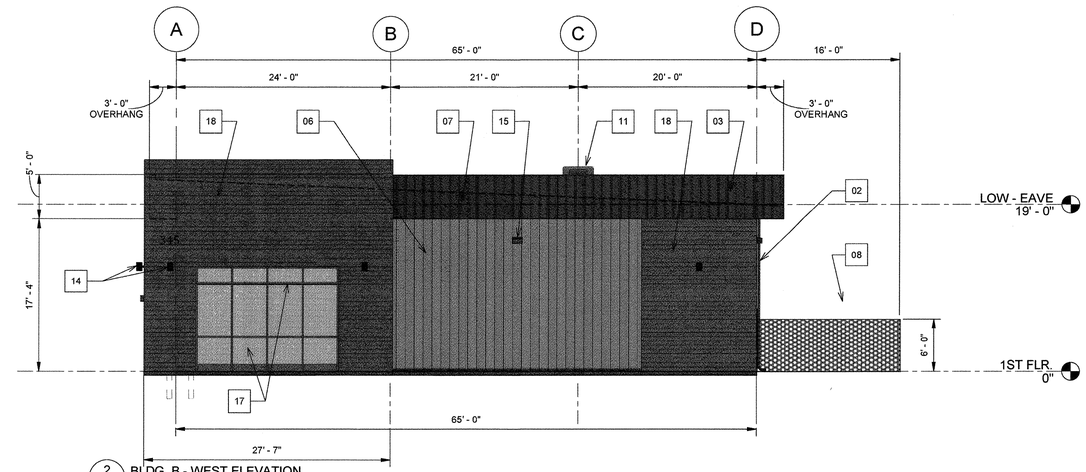

2 (A5.0B) BLDG. B - WEST ELEVATION
1/8" = 1'-0"

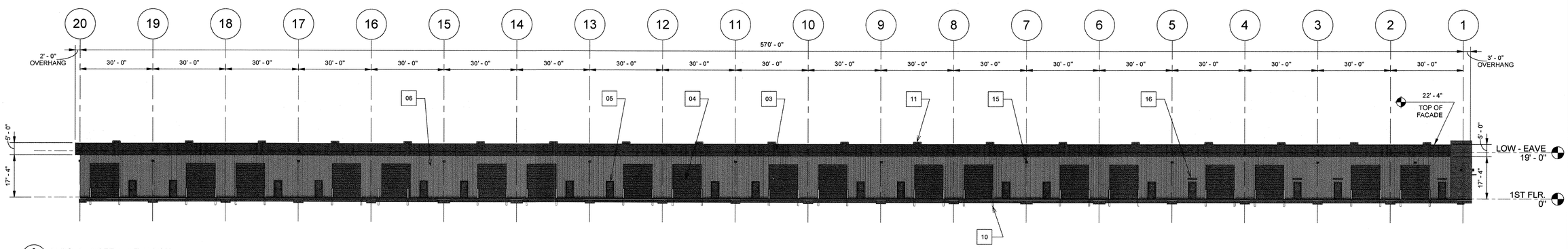

3 (A5.0B) BLDG. B - NORTH ELEVATION
1" = 20'-0"

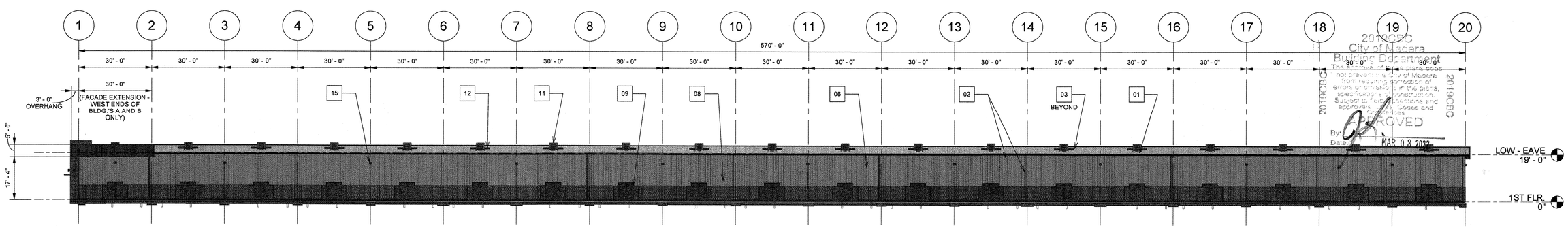

4 (A5.0B) BLDG B - SOUTH ELEVATION
1" = 20'-0"

2019CBC
City of Madera
Building Department
The issuance of this permit does not prevent the City of Madera from requiring correction of errors or omissions in the plans, specifications, or construction. Subject to field applications and approvals of Codes and Ordinances
APPROVED
By:
Date: MAR 0 3 2022

DBKO DESIGN-BUILD
WHSE PARTNERS

DATE	REVISION	BY
11/17/2021	2 PLAN CHECK RESPONSE	

ANY INFORMATION OR DATA ON THIS DRAWING IS NOT INTENDED TO BE SUITABLE FOR REUSE BY ANY PERSON, FIRM, OR CORPORATION FOR ANY PURPOSE OTHER THAN THE SPECIFIC PROJECT, ANY REUSE WITHOUT WRITTEN VERIFICATION AND ADAPTATION BY THE ENGINEER FOR THE SPECIFIC PURPOSE INTENDED WILL BE AT THE USER'S SOLE RISK AND WITHOUT LIABILITY OR LEGAL EXPOSURE TO THE ENGINEER.

SEAL
REGISTERED PROFESSIONAL ENGINEER ROBERT A. TAMACCO S5607 STRUCTURAL STATE OF CALIFORNIA
11/17/2021

EXTERIOR ELEVATIONS - BLDG. B

LEASE FLEX. / WAREHOUSE BUILDINGS
FOR
MADERA INDUSTRIAL WHSE, LLC
S. SCHNOOR AVENUE, MADERA, CA

JOB NUMBER	21107
DESIGNED BY	RT
DRAWN BY	LM
DATE	9/17/2021
SHEET NUMBER	A5.0B

G:\Shared drives\DBKO\Company\PROJECTS\2021\06_WHSE Partners-Fresno, CA\Plans, Calcs & Specs\Arch\Shell (DBKO)\Drawings\Fresno Property - Madera\WHSE-BLDGB_2021-09-17.rvt
12/8/2020 10:51:56 PM

ELEVATION KEYNOTES

01	24 GA. R-PANEL ROOF DECK BY PEMB MANUF. (COOL ROOF / WHITE COLOR TO MEET T24 ENERGY CODE AS APPLICABLE)
02	GUTTER AND DOWNSPOUT PER PEMB MANUFACTURER (COLOR TO MATCH WALL PANELS)
03	PROJECTED FACADE 26 GA. R-PANEL PER PEMB MANUFACTURER (STANDARD BLUE COLOR PER MANUFACTURER)
04	12'x14' OVERHEAD DOORS - STANDARD GREY COLOR
05	3'x7' WALK-DOOR / ENTRANCE (PAINTED BLUE COLOR TO MATCH BLDG. FACADE PANEL)
06	REVERSE RIB 26 GA. R-PANEL AT ALL EXTERIOR WALLS PER PEMB MANUF. (STANDARD GREY COLOR)
07	ROOF SLOPE BEYOND (1/2" / FT.)
08	6' TALL CHAINLINK FENCE AT YARDS W/ PRIVACY SLATS
09	DOUBLE-LEAF 10' WIDE ACCESS IN CHAIN LINK FENCE AT YARDS
10	NEW 4"Øx4'-0" SAFETY BOLLARD (PAINTED SAFETY YELLOW)
11	ROOFTOP MOUNTED EVAPORATIVE COOLING UNIT FOR SHOP / WAREHOUSE AREA
12	(1) 4'x8' SKY-LIGHT EACH UNIT
13	BACK-LIGHT BUILDING SIGNAGE (UNDER SEPARATE PERMIT)
14	ARCH. WALL LIGHT
15	LED WALL PACK FOR SITE LIGHTING AS REQ'D. PER ELECTRICAL ENGINEER

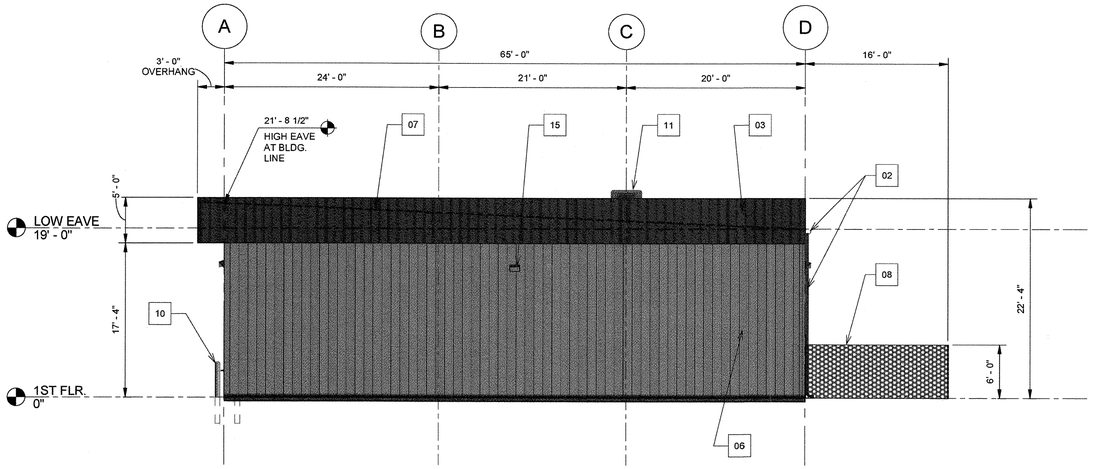

1 A5.0C BLDG. C - EAST ELEVATION
1/8" = 1'-0"

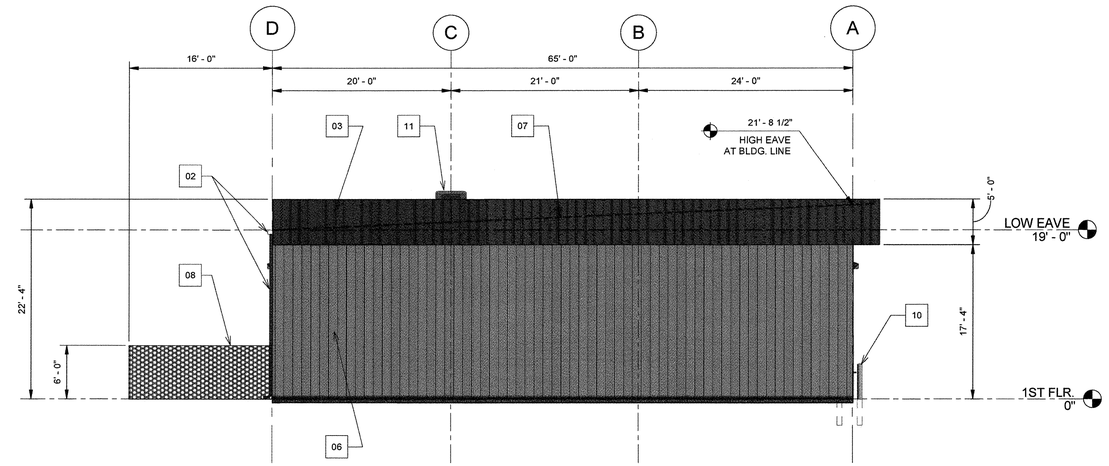

2 A5.0C BLDG. C - WEST ELEVATION
1/8" = 1'-0"

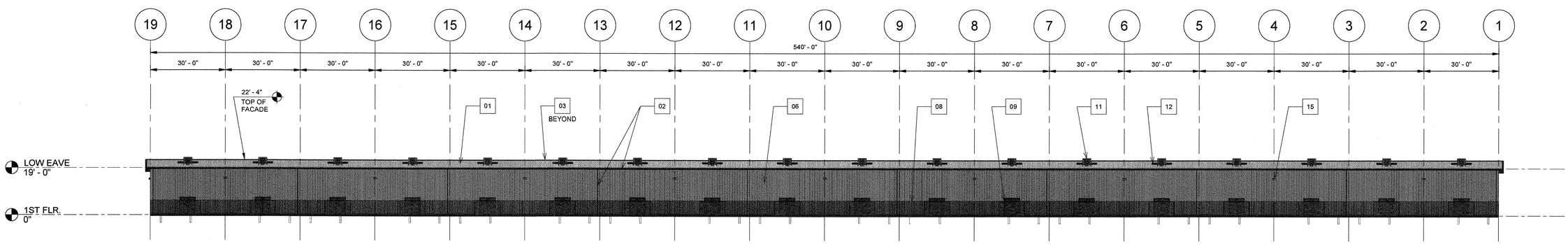

3 A5.0C BLDG C - NORTH
1" = 20'-0"

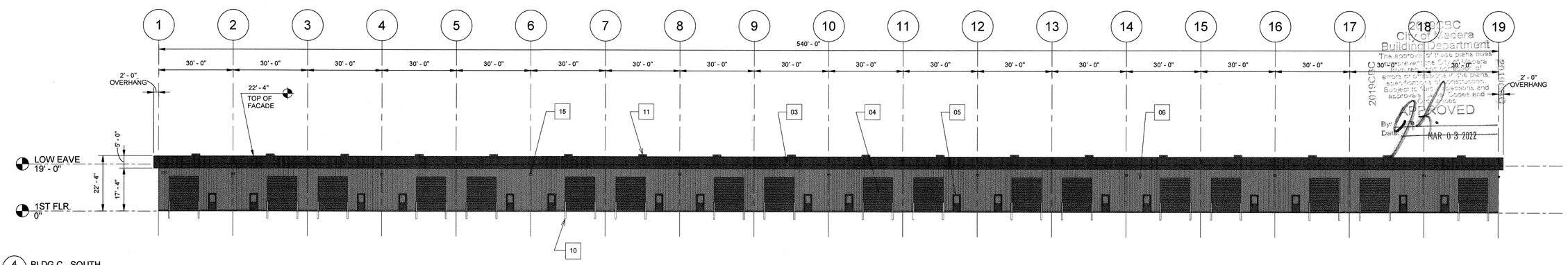

4 A5.0C BLDG C - SOUTH
1" = 20'-0"

2019CBC
CFC
City of Madera
Building Department
The approval of these plans does not permit the violation of any law, ordinance or regulation. Errors or omissions in the plans, specifications or construction. Subject to field inspections and approvals under Codes and Ordinances.
APPROVED
By:
Date: MAR 03 2022

DBKO DESIGN-BUILD
LIC#1032283

WHSE PARTNERS

BY	REVISION	DATE

ANY INFORMATION, OR DATA ON THIS DRAWING IS NOT INTENDED TO BE SUITABLE FOR REUSE BY ANY PERSON, FIRM, CORPORATION, OR ANY OTHER EXTENSIONS OF THIS PROJECT OR FOR USE ON ANY OTHER PROJECT. ANY REUSE WITHOUT WRITTEN VERIFICATION AND ADAPTATION BY THE ENGINEER FOR THE SPECIFIC PURPOSE INTENDED WILL BE AT THE USER'S SOLE RISK AND WITHOUT LIABILITY OR LEGAL EXPOSURE TO THE ENGINEER.

SEAL

EXTERIOR ELEVATIONS - BLDG. C

LEASE FLEX. / WAREHOUSE BUILDINGS
FOR
MADERA INDUSTRIAL WHSE, LLC
S. SCHNOOR AVENUE, MADERA, CA

JOB NUMBER	21107
DESIGNED BY	RT
DRAWN BY	LM
DATE	9/17/2021
SHEET NUMBER	A5.0C

G:\Shared drives\DBKO\Company\PROJECTS\2019_JN\WSE Partners-Fresno, CA\Plans, Cales & Specs\Arch-Struct (DBKO)\Drawings\Fresno Property - Master\WHSE-BLDGC_2021-09-17.rvt
12/6/2021 11:01:39 PM

ELEVATION KEYNOTES

01	24 GA. R-PANEL ROOF DECK BY PEMB MANUF. (COOL ROOF / WHITE COLOR TO MEET T24 ENERGY CODE AS APPLICABLE)
02	GUTTER AND DOWNSPOUT PER PEMB MANUFACTURER (COLOR TO MATCH WALL PANELS)
03	PROJECTED FACADE 26 GA. R-PANEL PER PEMB MANUFACTURER (STANDARD BLUE COLOR PER MANUFACTURER)
04	12'x14' OVERHEAD DOORS - STANDARD GREY COLOR
05	3'x7' WALK-DOOR / ENTRANCE (PAINTED BLUE COLOR TO MATCH BLDG. FACADE PANEL)
06	REVERSE RIB 26 GA. R-PANEL AT ALL EXTERIOR WALLS PER PEMB MANUF. (STANDARD GREY COLOR)
07	ROOF SLOPE BEYOND (1/2" / FT.)
08	6' TALL CHAINLINK FENCE AT YARDS W/ PRIVACY SLATS
09	DOUBLE-LEAF 10' WIDE ACCESS IN CHAIN LINK FENCE AT YARDS
10	NEW 4"Øx4'-0" SAFETY BOLLARD (PAINTED SAFETY YELLOW)
11	ROOFTOP MOUNTED EVAPORATIVE COOLING UNIT FOR SHOP / WAREHOUSE AREA
12	(1) 4'x8' SKY-LIGHT EACH UNIT
13	BACK-LIGHT BUILDING SIGNAGE (UNDER SEPARATE PERMIT)
14	ARCH. WALL LIGHT
15	LED WALL PACK FOR SITE LIGHTING AS REQ'D. PER ELECTRICAL ENGINEER
16	LOADING DOCK PER PLAN (SLOPE / GRADE PER CIVIL DRAWINGS)

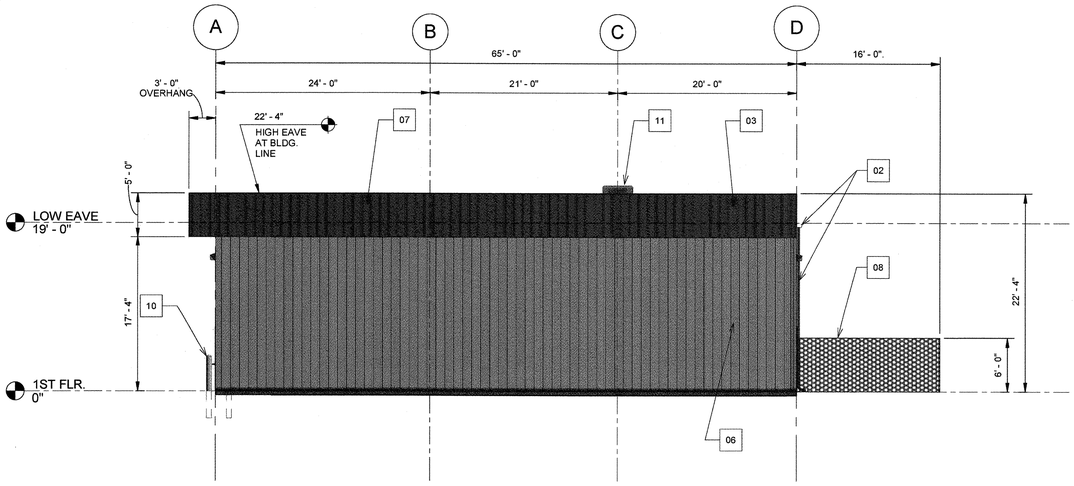

1 A5.0D BLDG D - WEST
1/8" = 1'-0"

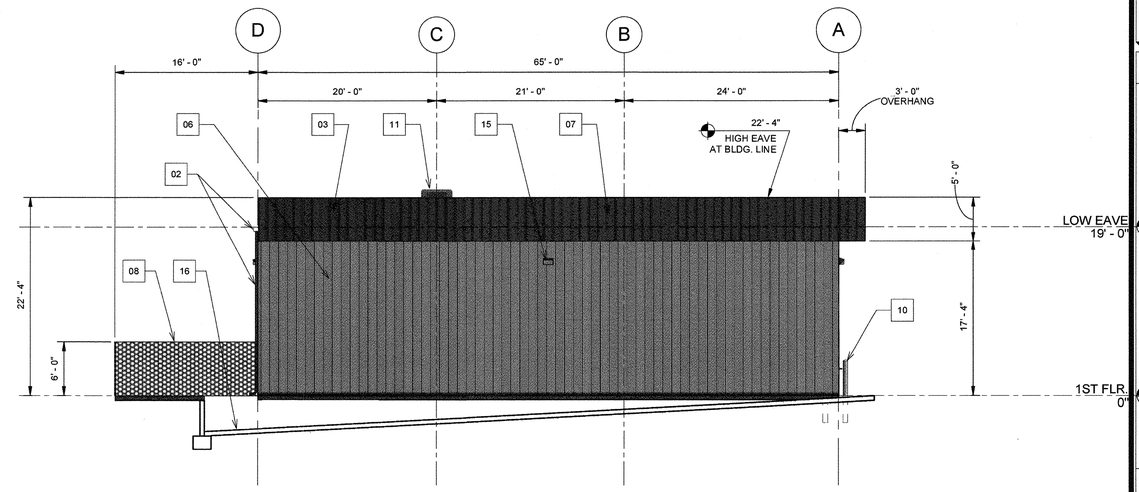

2 A5.0D BLDG. D - EAST
1/8" = 1'-0"

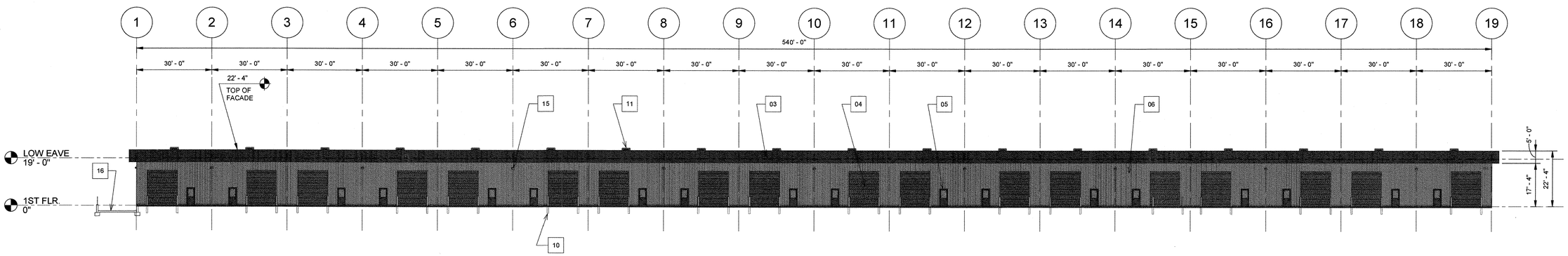

3 A5.0D BLDG. D - NORTH
1" = 20'-0"

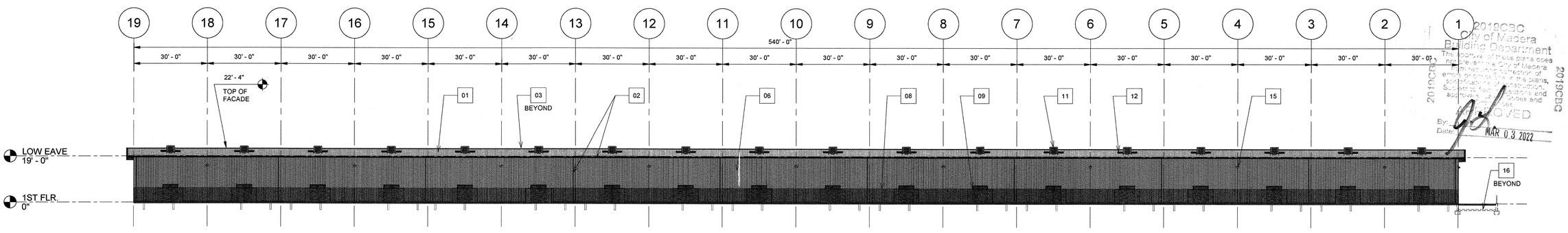

4 A5.0D BLDG D - SOUTH
1" = 20'-0"

2019CBC
City of Madera
Building Department
This approval of these plans does not permit the City of Madera to violate any provisions of any law or ordinance or authorize the construction of any building or structure in violation of the plans, specifications, or other data submitted for review and approval. Approval of these plans and specifications shall not be construed to be an approval of any violation of any provisions of the California Building Code or any other ordinance of the City of Madera.
2019CBC
2019CBC
APPROVED
By:
Date: MAR 03 2022

DBKO DESIGN-BUILD
LIC#1032283

WHSE PARTNERS

DATE	BY

REVISION

ANY INFORMATION OR DATA ON THIS DRAWING IS NOT INTENDED TO BE SUITABLE FOR REUSE BY ANY PERSON, FIRM, CORPORATION, OR ANY OTHER ENTITY ON ANOTHER PROJECT. NO PERSON, FIRM, CORPORATION, OR ANY OTHER ENTITY MAY REUSE THIS DRAWING OR ANY DATA ON ANOTHER PROJECT. ANY REUSE WITHOUT WRITTEN VERIFICATION AND ADAPTATION BY THE ENGINEER FOR THE SPECIFIC PURPOSE INTENDED WILL BE AT THE USER'S SOLE RISK AND WITHOUT LIABILITY OR LEGAL EXPOSURE TO THE ENGINEER.

SEAL

REGISTERED PROFESSIONAL ENGINEER
ROBERT A. TAMADDOD
S5607
STRUCTURAL
STATE OF CALIFORNIA
11/17/2021

EXTERIOR ELEVATIONS - BLDG. D

LEASE FLEX. / WAREHOUSE BUILDINGS

FOR

MADERA INDUSTRIAL WHSE, LLC

S. SCHNOOR AVENUE, MADERA, CA

JOB NUMBER	21107
DESIGNED BY	RT
DRAWN BY	LM
DATE	9/17/2021
SHEET NUMBER	A5.0D

12/6/2021 10:59:39 PM

G:\Shared drives\DBKO\Company\PROJECTS\2019_WHSE Partners-Fresno, CA\Plans, Calcs & Specs\Arch-Struct (DBKO)\Drawings\Fresno Property - Madera\WHSE-BLDGD_2021-10-13.rvt

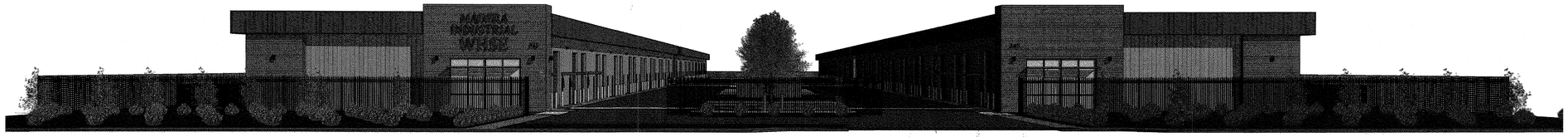

1 A5.1 CONCEPT VIEW 1

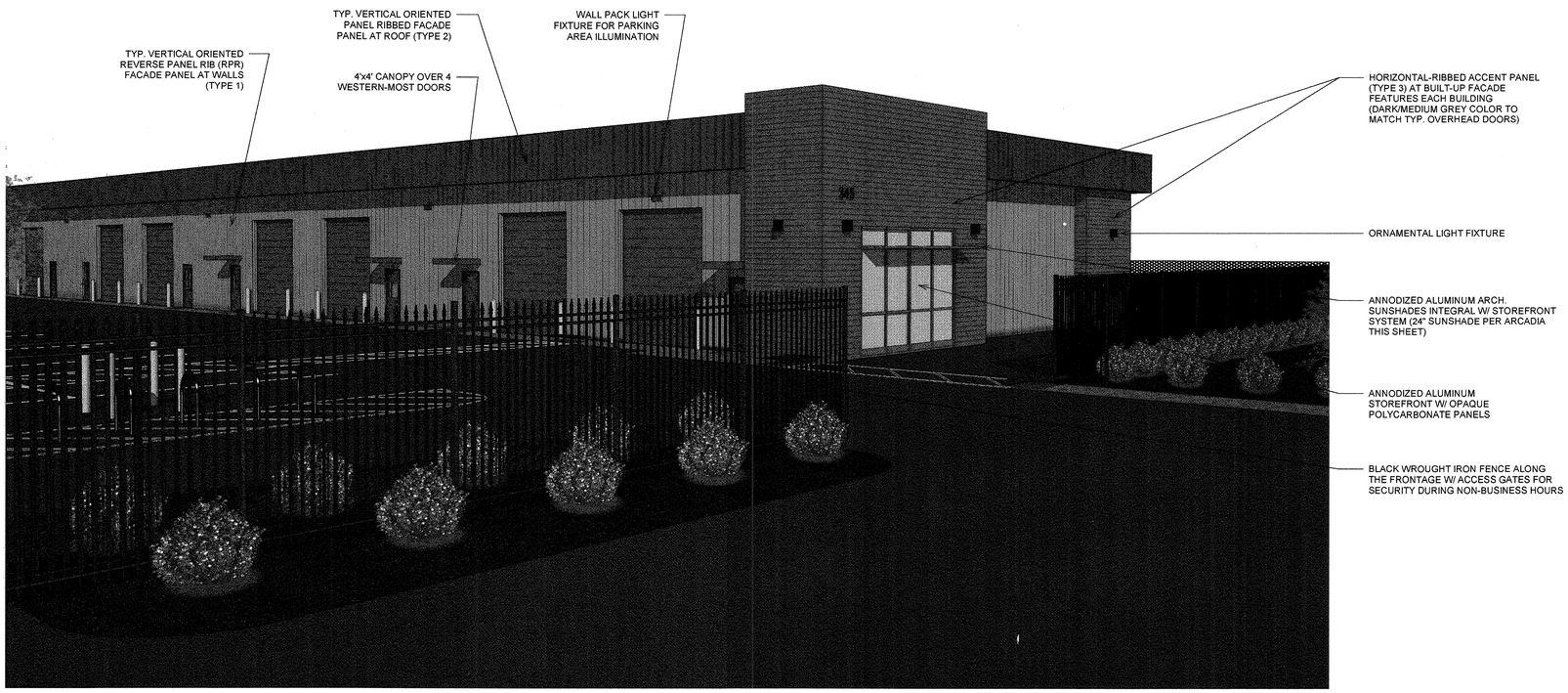

2 A5.1 CONCEPT VIEW 2

PANEL TYPES:

TYPE 1	-	RPR WALL PANEL
TYPE 2	-	VERTICAL RIBBED FACADE PANEL AT ROOF
TYPE 3	-	PBD RIBBED PANEL (ORIENTED HORIZONTAL)

2

2019CBC
City of Madera
Building Department
The approval of these plans does not prevent the City of Madera from requiring correction of errors or omissions in the plans, specifications or construction. Subject to field inspections and approvals of Codes and Ordinances.
APPROVED
By:
Date: MAR 03 2022

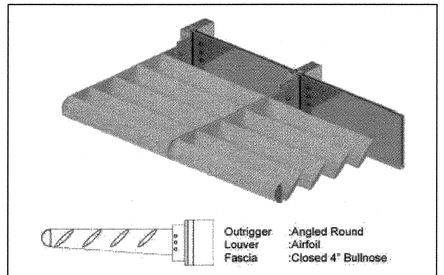

24" SUNSHADE (ANNODIZED ALUMINUM)

DBKO DESIGN-BUILD
UCF#102263

WHSE PARTNERS

DATE	REVISION	BY
11/17/2021	2 PLAN CHECK RESPONSE	

ANY INFORMATION OR DATA ON THIS DRAWING IS NOT INTENDED TO BE SUITABLE FOR REUSE BY ANY PERSON, FIRM, CORPORATION, OR GOVERNMENTAL AGENCY FOR ANY OTHER PROJECT EXCEPT THE PROJECT INTENDED FOR THIS PROJECT. ANY REUSE WITHOUT WRITTEN VERIFICATION AND ADAPTATION BY THE ENGINEER FOR THE SPECIFIC PURPOSE INTENDED WILL BE AT THE USER'S SOLE RISK AND WITHOUT LIABILITY OR LEGAL EXPOSURE TO THE ENGINEER.

SEAL
REGISTERED PROFESSIONAL ENGINEER
ROBERT A. TAMACCIO
S5607
STRUCTURAL
STATE OF CALIFORNIA
11/17/2021

PROJECT ISOMETRIC VIEWS

LEASE FLEX. / WAREHOUSE BUILDINGS
FOR
MADERA INDUSTRIAL WHSE, LLC
S. SCHNOOR AVENUE, MADERA, CA

JOB NUMBER	21107
DESIGNED BY	RT
DRAWN BY	LM
DATE	9/17/2021
SHEET NUMBER	A5.1

G:\Shared drives\DBKOCompany\PROJECTS\2019_WHSE Partners-Fresno, CA\Plans, Calcs & Specs\Arch-Bldg\CD\Drawings\Fresno Property - Madera\20106 .MP - Fresno-Madera_2021-10-12.rvt 11/22/2021 3:40:20 PM

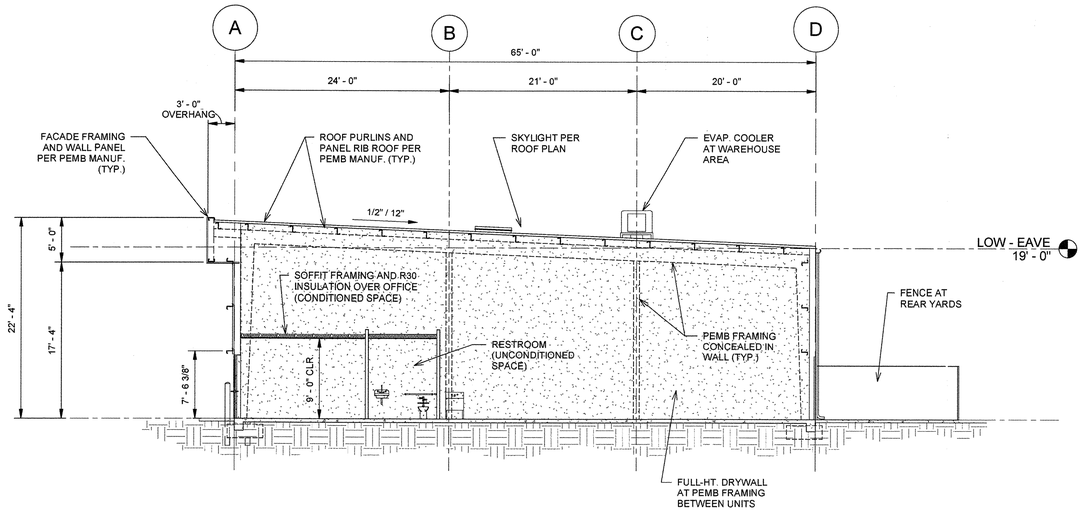

1 / A5.2 TYP. BUILDING SECTION
1/8" = 1'-0"

2019CBC
City of Madera
Building Department
The approval of these plans does not prevent the City of Madera from requiring correction of errors or omissions in the plans, specifications or construction. Subject to field inspections and approval under codes and ordinances
APPROVED
By:
Date: MAR 0 3 2022

DBKO DESIGN-BUILD
WHSE PARTNERS

DATE		REVISION	BY
11/17/2021	2	PLAN CHECK RESPONSE	

ANY INFORMATION OR DATA ON THIS DRAWING IS NOT INTENDED TO BE SUITABLE FOR REUSE BY ANY PERSON, FIRM OR CORPORATION FOR ANY OTHER PROJECT OR EXTENSION TO THIS PROJECT, EXCEPT BY AGREEMENT WITH THE OWNER OF THE PROJECT. ANY REUSE WITHOUT WRITTEN VERIFICATION AND ADAPTATION BY THE ENGINEER FOR THE SPECIFIC PURPOSE INTENDED WILL BE AT THE USER'S SOLE RISK AND WITHOUT LIABILITY OR LEGAL EXPOSURE TO THE ENGINEER.

SEAL
REGISTERED PROFESSIONAL ENGINEER
ROBERT A. TAMACCIO
S5607
STRUCTURAL
STATE OF CALIFORNIA
11/17/2021

TYPICAL BLDG. SECTION

LEASE FLEX. / WAREHOUSE BUILDINGS
FOR
MADERA INDUSTRIAL WHSE, LLC
S. SCHNOOR AVENUE, MADERA, CA

JOB NUMBER	21107
DESIGNED BY	RT
DRAWN BY	CD
DATE	11/17/2021
SHEET NUMBER	A5.2 (2)

G:\Shared drives\DBKO\Company\PROJECTS\2019_WHSE Partners-Fresno, CA\Plans, Cals & Spec\Arch-Struct (DBKO)\Drawings\Fresno Property - Masters\WHSE-BLDGA_2021-09-12.rvt 11/22/2021 2:59:10 PM

TYPICAL WALL SCHEDULE NOTES:

1. SEE METAL STUD FRAMING PLAN AND DETAILS FOR FRAMING REQUIREMENTS (SHEET A6.2).
2. UNLESS UL LISTED WALL ASSEMBLY FOR FIRE RESISTANCE CALLED OUT, PROVIDE MIN. #6x1-1/4" BUGLE HEAD SCREWS WITH MAX. 8" O.C. EDGE SPACING AND 12" O.C. MAX. FIELD SPACING AT GYP. BOARD PANELS TO FRAMING.
3. TAPE ALL GYP. BOARD JOINTS AND PROVIDE LEVEL OF FINISH IN ACCORDANCE WITH PROJECT REQUIREMENTS (PROVIDE MIN. LEVEL 4 FINISH OR AS APPROVED BY DBKO DESIGN+BUILD UNLESS NOTED OTHERWISE ON PLANS).
4. FULLY TAPE/SEAL ALL FACED INSULATION JOINTS IN ACCORDANCE WITH THE MANUFACTURER'S INSTRUCTIONS FOR A WATER-RESISTIVE AND AIR BARRIER USING COMPATIBLE TAPES AND SEALANTS. SEAL/CAULK AROUND ALL PENETRATIONS AS REQ'D. FOR AIR AND WATER-TIGHTNESS.

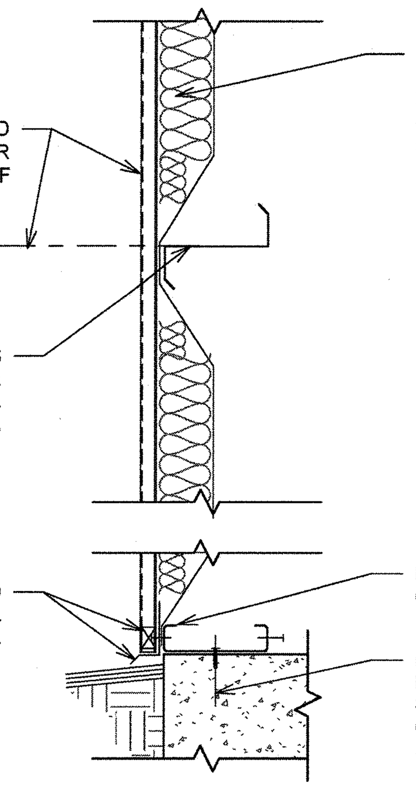

TYPE 1
TYPICAL EXTERIOR WAREHOUSE PEMB WALL

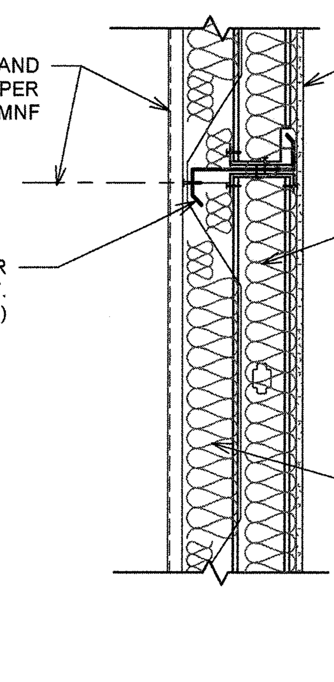

TYPE 1A
TYPICAL EXT. OFFICE WALL AT ADMIN. AREA (ALONG GRID A)

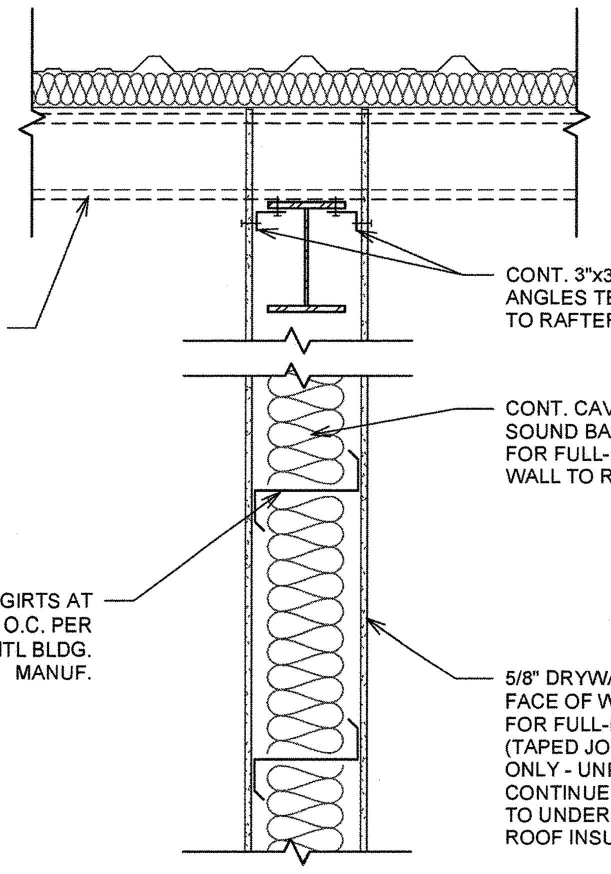

TYPE 2
TYPICAL INTERIOR WAREHOUSE PEMB PARTITION WALL

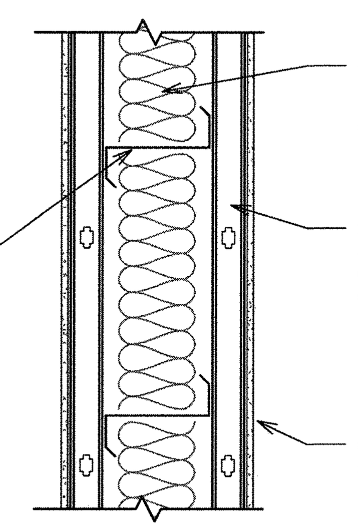

TYPE 2A
TYPICAL INTERIOR PEMB PARTITION WALL AT OFFICE

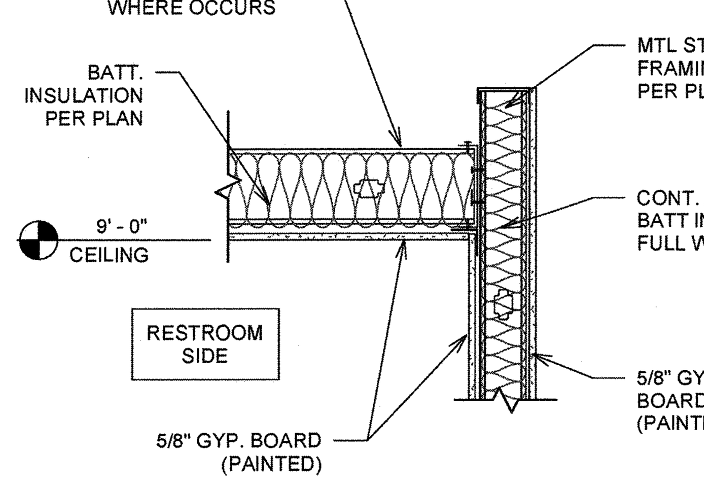

TYPE 3
WALLS AT RESTROOMS

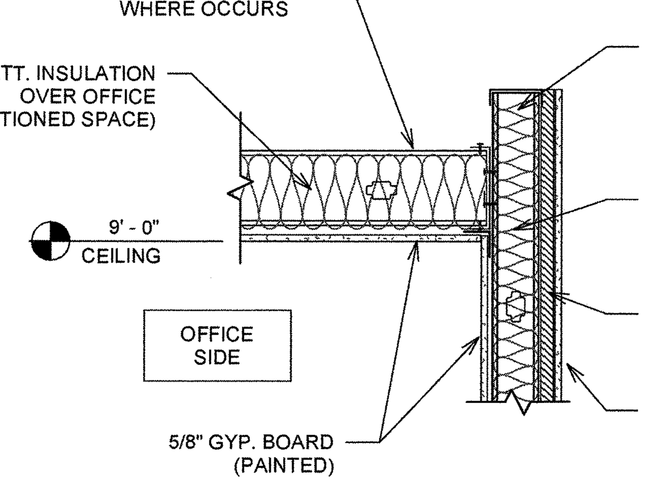

TYPE 3A
WALLS AT OFFICE

1 / A6.0 WALL SCHEDULE
1" = 1'-0"

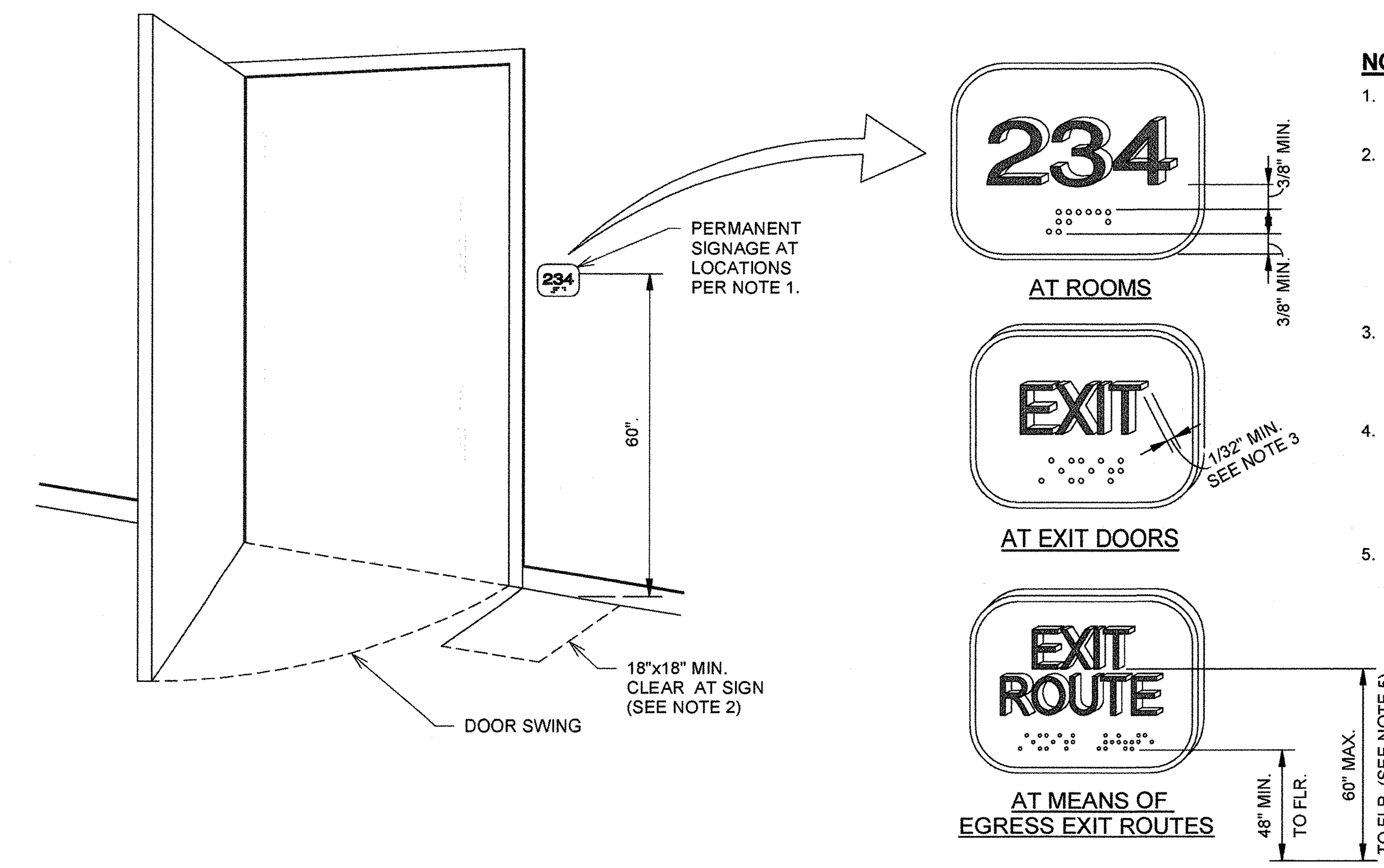

NOTES:

1. TACTILE SIGNAGE REQUIRED AT ALL EXIT DOORS AND ROOMS/SPACES WITH PERMANENT SIGNAGE
2. PERMANENT SIGNAGE TO BE INSTALLED ON THE WALL ADJACENT TO THE LATCH SIDE OF THE DOOR (INACTIVE LEAF SIDE AT DOUBLE-DOORS WITH ONE INACTIVE LEAF OR AT THE RIGHT SIDE OF A DOUBLE DOOR WITH BOTH LEAFS ACTIVE). MOUNTING LOCATION MUST PERMIT A PERSON TO APPROACH WITHOUT ENCOUNTERING PROTRUDING OBJECTS OR HAVING TO STAND IN THE SWING PATH OF THE DOOR. PROVIDE MIN. 18"x18" CLEAR FLOOR SPACE CENTERED ON SIGN (CBC 11B-703.4.2).
3. LETTERS AND NUMBERS ARE TO BE RAISED 1/32", UPPER CASE, SANS SERIF TYPE AND ARE TO BE MIN. 5/8" HIGH BUT NO GREATER THAN 2" HIGH. SEE TAS SECTION 703.2 FOR ADDITIONAL REQUIREMENTS.
4. PROVIDE MATCHING GRADE II BRAILLE. LITERARY BRAILLE STANDARD DIMENSIONS ARE TO COMPLY WITH TEXAS ACCESSIBILITY STANDARD FIGURE 703.3.1 AND BE SEPARATED MINIMUM 3/8" FROM ADJACENT TACTILE CHARACHTERS AND DECORATIVE BORDERS/TRIM.
5. MOUNTING HEIGHT REQUIREMENTS FOR ALL SIGNS PER "EXIT ROUTE" SIGNAGE BELOW (48" MIN. ABOVE FIN. FLR. TO BASELINE OF LOWEST BRAILLE CELLS AND 60" MAX. ABOVE FIN. FLR. TO BASELINE OF HIGHEST ROW OF RAISED CHARACTERS).

2 / A6.0 INTERIOR DOOR SIGN DETAIL
1/2" = 1'-0"

DOOR SCHEDULE

MARK	QUANTITY	DOOR CONSTRUCTION	FRAME TYPE	FRAME FINISH	HEIGHT	WIDTH	THICKNESS	TYPE	HARDWARE SET	COMMENTS
1A	74	H.M.	STL/AL	PT	7' - 0"	6' - 0"	1 3/4"	B	GROUP 4	YARD ACCESS DOOR
1B	74		PRE	PRE	14' - 0"	12' - 0"		C		OVERHEAD DOOR
1C	74	H.M.	STL/AL	PT	7' - 0"	3' - 0"	1 3/4"	A1	GROUP 1	OFFICE EXT. DOOR (SEE NOTE 10)
1D	74	H.M.	STL/AL	PT	7' - 0"	3' - 0"	1 3/4"	A	GROUP 2	OFFICE INT. DOOR (SEE NOTE 10)
1E	74	H.M.	STL/AL	PT	7' - 0"	3' - 0"	1 3/4"	A	GROUP 3	RESTROOM DOOR

2

DOOR NOTES:

1. CONFIRM SIZE AND MATERIALS WITH DBKO. NOTE:

   H.M. = HOLLOW METAL
   PT = PAINT (APPR. BY DBKO)
   H.C. = HOLLOW CORE.
   ST = STEEL / ALUMN (APPR. BY DBKO)
   S.C. = SOLID CORE
   WOOD = PLAIN SLICED CHERRY WOOD
   PRE = PREFINISHED

2. DOORS SHALL BE READILY DISTINGUISHABLE FROM ADJACENT CONSTRUCTION AND FINISHES. MIRRORS OR SIMILAR REFLECTIVE MATERIALS ARE NOT TO BE USED ON DOORS (CBC 1008.1).
3. DOOR OPENING PUSH/PULL FORCE NOT TO EXCEED 5 LBS (CBC 1008.1.3 AND CBC11B-404.2.9).
4. VERIFY THAT FLOOR ELEVATION ON EITHER SIDE OF DOOR IS LEVEL AND THE SAME ELEVATION (CBC 1008.1.5). AND THAT THRESHOLD MEETS CBC 1008.1.7 WHERE PROVIDED.
5. DOOR OPERATIONS:
   A. EGRESS DOORS ARE TO BE READILY OPENABLE FROM EGRESS SIDE WITHOUT USE OF A KEY OR SPECIAL KNOWLEDGE/EFFORT.
   B. HARDWARE (DOOR HANDLES, PULLS, LATCHES, LOCKS, ETC.) SHOULD BE LEVER, PANIC HARDWARE, PUSH-PULL,ETC. AS REQUIRED SO AS NOT TO REQUIRE TIGHT GRASPING, TIGHT PINCHING, OR TWISTING OF THE WRIST.
   C. HARDWARE HEIGHT IS TO BE BETWEEN 34 AND 44 INCHES.
6. WHERE GLAZING PROVIDED IN DOORS, USE SAFETY GLAZING COMPLYING W/ IBC 2406.
7. PROVIDE BLOCKING IN WALL BEHIND WALL-MOUNTED DOOR STOPS PER 3/A7.2
8. CLOSERS ON DOORS ARE TO COMPLY W/ CBC 11B-404.2.8.
9. THE BOT. 10" OF THE PUSH SIDE OF ALL MAN DOORS TO HAVE A SMOOTH/FLAT SURFACE.
10. ALL EXTERIOR DOORS AT CONDITIONED SPACES TO BE INSULATED (MIN. R-5).

HARDWARE SETS
NOTE - VERIFY HARDWARE FINISH WITH DBKO CONSTRUCTION.

GROUP 1 - SINGLE EXIT DOOR

EACH SHALL HAVE:
3 HINGES
1 ENTRANCE/OFFICE LOCK W/ ACCESS. LEVER EA. SIDE
1 CLOSER
1 THRESHOLD
1 DOOR BOTTOM
1 WEATHERSTRIP SET PER LEAF (OMIT AT INT. DOORS)
1 KICKPLATE (PUSH SIDE - TYP. ALL DOOR TYPES)
1 RAIN DRIP CAP

GROUP 2 - SINGLE DOOR, PASSAGE AT OFFICE

EACH SHALL HAVE:
3 HINGES
1 ACCESS LEVER EA. SIDE (NON-LOCKING)
1 WALL STOP
1 KICKPLATE (PUSH SIDE)
3 SILENCERS

GROUP 3 - SINGLE DOOR, UNISEX RESTROOM

EACH SHALL HAVE:
3 HINGES
1 PRIVACY LOCK
1 CLOSER
1 WALL STOP
3 SILENCERS
1 KICKPLATE

GROUP 4 - PAIR OF DOORS AT WAREHOUSE

EACH SHALL HAVE:
6 HINGES
1 ENTRANCE LOCK
2 FLUSH BOLTS
1 DUSTPROOF STRIKE
2 WALL STOPS
2 WEATHERSTRIP SET
2 RAIN DRIP CAP
2 KICKPLATES

2019CBC
City of Madera
Building Department
The approval of these plans does not prevent the City of Madera from requiring correction of errors or omissions in the plans specifications of construction. Subject to field inspections and approvals ... Codes and ordinances
APPROVED
By:
Date: MAR 0 3 2022

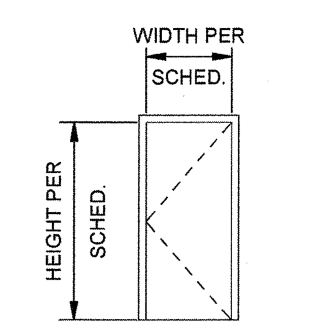

TYPE A

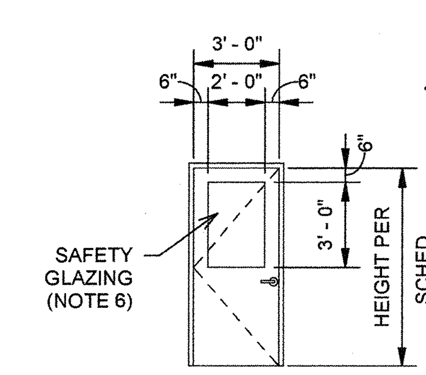

TYPE A1

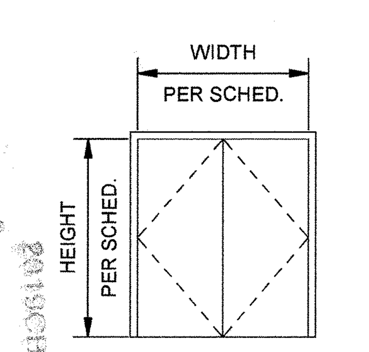

TYPE B

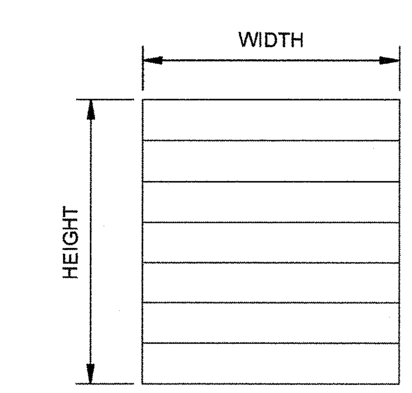

TYPE C

3 / A6.0 DOOR SCHEDULE
1 1/2" = 1'-0"

DBKO DESIGN · BUILD
LIC#1032283

WHSE [PARTNERS]

DATE	REVISION	BY
11/17/2021	2 PLAN CHECK RESPONSE	

ANY INFORMATION OR DATA ON THIS DRAWING IS NOT INTENDED TO BE SUITABLE FOR REUSE BY ANY PERSON, FIRM, CORPORATION, OR ANY OTHERS ON EXTENSIONS OF THIS PROJECT OR FOR ANY USE ON ANY OTHER PROJECT. ANY REUSE WITHOUT WRITTEN VERIFICATION AND ADAPTATION BY THE ENGINEER FOR THE SPECIFIC PURPOSE INTENDED WILL BE AT THE USER'S SOLE RISK AND WITHOUT LIABILITY OR LEGAL EXPOSURE TO THE ENGINEER.

SEAL
REGISTERED PROFESSIONAL ENGINEER
ROBERT A. TAMACCIO
S5607
STRUCTURAL
STATE OF CALIFORNIA
11/17/2021

DETAILS

LEASE FLEX. / WAREHOUSE BUILDINGS
FOR
MADERA INDUSTRIAL WHSE, LLC
S. SCHNOOR AVENUE, MADERA, CA

JOB NUMBER 21107
DESIGNED BY RT
DRAWN BY LM
DATE 9/17/2021
SHEET NUMBER A6.0

G:\Shared drives\DBKOmpany\PROJECTS\20106_WHSE Partners-Fresno, CA\Plans, Calcs & Specs\Arch-Struct (DBKO)\Drawings\Franco Property - Madera\WHSE-BLDGA_2021-09-12.rvt 11/22/2021 2:59:13 PM

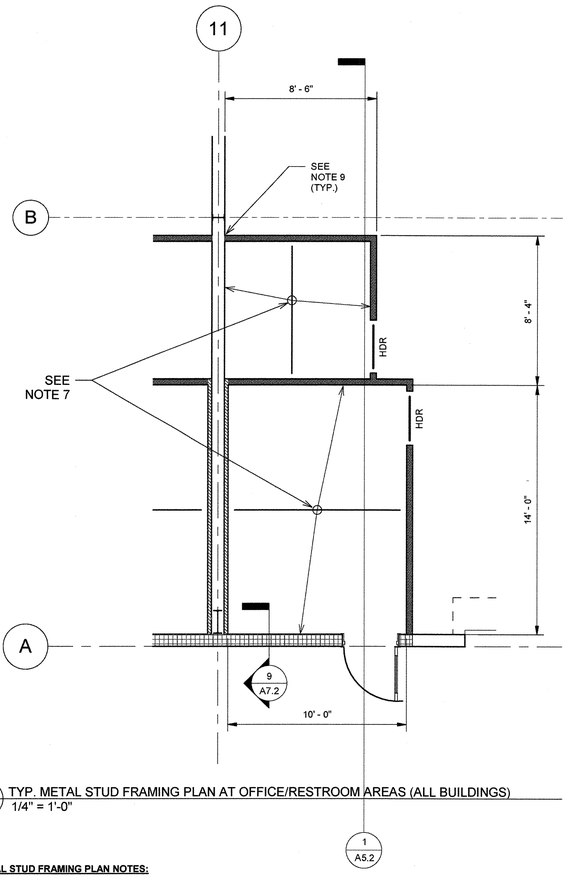

1 A7.0 TYP. METAL STUD FRAMING PLAN AT OFFICE/RESTROOM AREAS (ALL BUILDINGS)
1/4" = 1'-0"

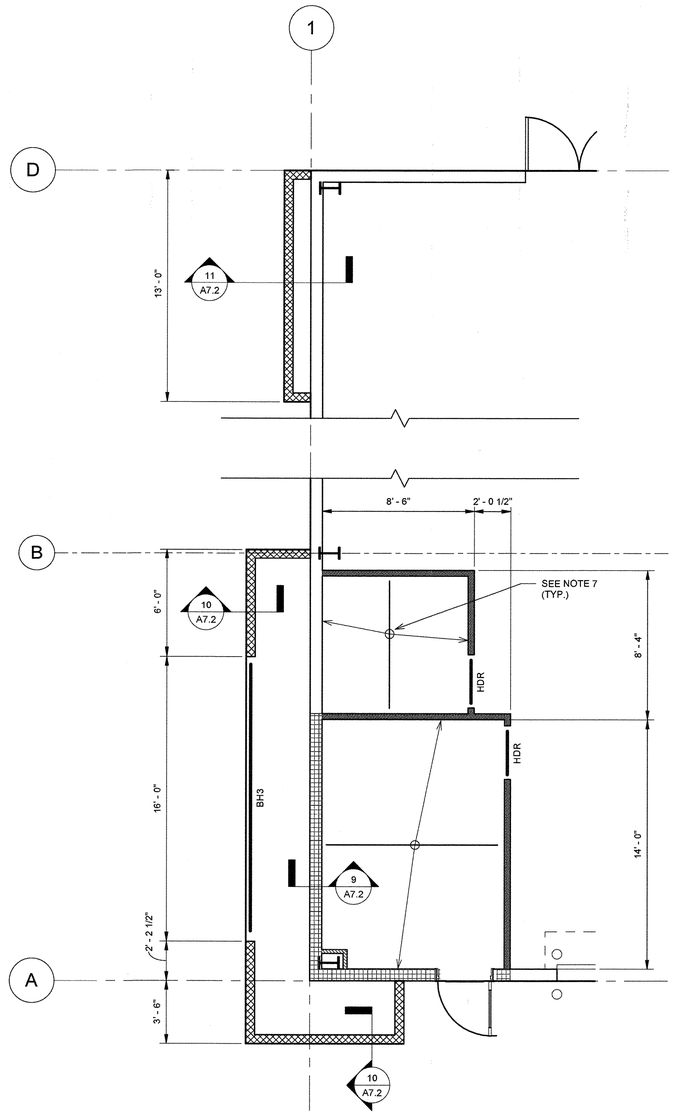

2 A7.0 METAL STUD FRAMING AT WEST END OF BLDG. A (OPP. HAND BLDG. B)
1/4" = 1'-0"

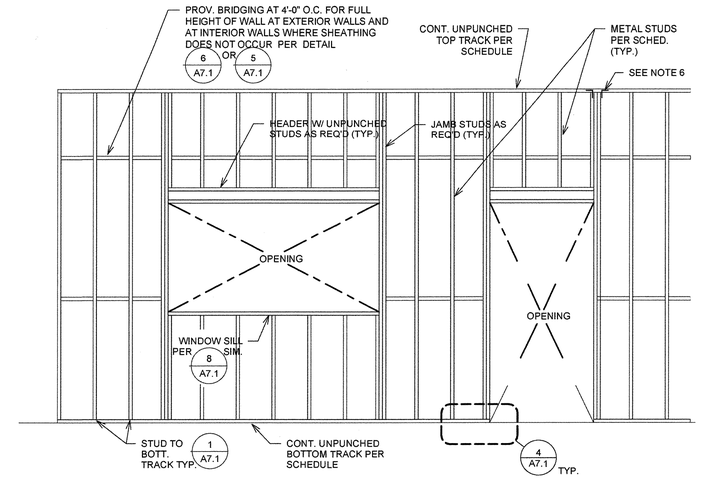

METAL STUD WALL SCHEDULE

TYPE	DESCRIPTION	STUD SIZE	SPACING	TOP TRACK	BOT. TRACK	OPENING HEADER
A	6" EXT. WALLS	600S162-43	16"	600T125-43	600T125-43	SEE NOTE 6
B	EXT. WALLS (INFILL@PEMB)	250S125-33	24"	250T125-33	250T125-33	N/A - OPENINGS PER PEMB MNF.
C	3-5/8" INTERIOR WALLS	362S125-33	24"	362T125-33	362T125-33	SEE NOTE 6
D	2-1/2" FURRING WALLS	250S125-33	24"	250T125-33	250T125-33	SEE NOTE 6

3 A7.0 METAL STUD WALL SCHEDULE
1" = 1'-0"

NOTES:

1. ALL METALS IDENTIFIED SHALL BE PROVIDED BY "SSMA APPROVED SUPPLIER" PER ICC REPORT ESR-3064P. REFER TO THE REPORT FOR ALL REQUIREMENTS AND INFORMATION NOT LISTED OR SHOWN HERE. SEE NOTES THIS SHEET FOR MATERIAL STRENGTH REQUIREMENTS AND OTHER TYPICAL METAL STUD NOTES.
2. WEAK AXIS TORSIONAL BRIDGING (WEB BRACING IS REQUIRED AT 4'-0" PER 5 A7.1 OR 6 A7.1 AT ALL EXTERIOR WALLS AND INTERIOR WALLS THAT ARE SHEATHED W/ GYP. ON ONE SIDE ONLY (INSULATION BOARD DOES NOT QUALIFY AS SHEATHING).
3. CONTINOUS SUPPORT REQUIRED FOR EACH FLANGE (BOTH SIDES) USING MIN. 1/2" THICK GYPSUM WALL BOARD WITH MIN. #6 SCREW ATTACHED AT 12" O.C. MAX. SPACING DIRECTLY TO STUD FLANGE (SEE NOTE 2).
4. TOP AND BOTTOM TRACKS ARE TO BE UNPUNCHED. TOP TRACK SPLICES PER DETAIL 10 A7.1
   BOTTOM TRACK FASTENED PER DETAIL 4 A7.1
5. TOPS OF ALL NON-BEARING WALLS TO BE BRACED TO STRUCTURE PER APPLICABLE DETAILS.
6. FOR HEADERS AT INTERIOR WALLS W/ HORIZONTAL OPENING LESS THAN OR EQUAL TO 4'-0", SEE 8 A7.1 FOR ALL OTHER OPENINGS, PROVIDE HEADER PER 7 A7.1

METAL STUD FRAMING PLAN NOTES:

1. COLD-FORMED SECTIONS ARE TO MEET THE STANDARD SECTION CRITERIA AS SET BY THE STEEL STUD MANUFACTURERS ASSOCIATION (SSMA) AND ESR-3064P.
2. MATERIAL: ASTM A1003-13 STRUCTURAL GRADE 50 OR 33 OR ASTM A653 SS W/ MIN. G40 COATING PER THE TABLE BELOW

GAUGE	MILS	DESIGN THICKNESS	YIELD STRESS	ULTIMATE STRESS
12	97	0.1017	50 KSI	65 KSI
14	68	0.0713	50 KSI	65 KSI
16	54	0.0566	50 KSI	65 KSI
18	43	0.0451	33 KSI	45 KSI
20	33	0.0346	33 KSI	45 KSI
25	18	0.0188	33 KSI	45 KSI

SSMA SECTION DESIGNATION: MEMBER DEPTH; STYLE; FLANGE WIDTH; THICKNESS (I.E. 600S162-54)
MEMBER DEPTH - DEPTH OF SECTION IN 1/100TH INCHES; 600=6"
STYLE - S=STUD, T=TRACK, U=CHANNEL, F=FURRING CHANNEL
FLANGE WIDTH - FLANGE WIDTH IN 1/100TH INCHES; 162= 1 5/8"
THICKNESS - MIN BASE METAL THICKNESS IN 1/1000TH OF AN INCH; 54=.054"=16 GA.
(THICKNESS REPRESENTS 95% OF DESIGN THICKNESS)

3. *WELDING*

   WELD PER AWS D-1.3, AISI SECTION E2. DO NOT WELD SECTIONS THINNER THAN 16 GA (54 MILS)

4. *SLOTTED CLIPS, ANGLES AND TRACKS*

   INSTALL FASTENERS IN THE CENTER OF THE SLOT AND BACKED OFF 1/4 TURN TO PREVENT HIGH CLAMPING FORCES AND ALLOW SLIPPAGE (SEE FIGURE BELOW) OR USE STAND-OFF WASHER PER MANUFACTURER'S INSTRUCTIONS.

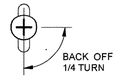

5. *FASTENERS AND CONNECTIONS*

   MINIMUM SPACING BETWEEN CENTER OF SCREWS IN COLD-FORMED SECTIONS IS TO BE THREE TIMES THE SCREW DIAMETER. MINIMUM EDGE DISTANCE IS TO BE ONE-AND-A-HALF TIMES THE SCREW DIAMETER.

6. FOR WALL STUD SIZES AND FRAMING REQUIREMENTS, SEE METAL STUD WALL SCHEDULE PER 3 A7.0
7. PROVIDE JOIST FRAMING AT GYP. BOARD CEILINGS PER 1 A7.2
8. PROVIDE TRACK BACKING AT WALL MOUNTED EQUIPMENT/FIXTURES/CASEWORK COMPONENTS PER 3 A7.2 COORDINATE LOCATIONS WITH OTHER TRADES BEFORE SHEATHING WALLS.
9. WHERE METAL STUD WALLS TERMINATE AT PEMB WALLS, PROVIDE (2) #8 SCREWS THRU END STUD WEB TO EA. INTERIOR GIRT FLANGE .

2019CBC
City of Madera
Building Department
This approval of these plans does not prevent the building official from requiring the correction of errors on these plans, in the violation of any ordinance or state law. Subject to legal interpretation of these plans and specifications by the building official. Subject to legal interpretation of these plans and specifications by the building official. Approval of these plans and specifications shall not be construed to be a permit for, or an approval of, any violation of any provisions of the California Building Codes and City Ordinances.
APPROVED
By:
Date: MAR 03 2022

DBKO DESIGN-BUILD
UCF#702203

WHSE PARTNERS

DATE	REVISION	BY

ANY INFORMATION OR DATA ON THIS DRAWING IS NOT INTENDED TO BE SUITABLE FOR REUSE BY ANY PERSON, FIRM OR CORPORATION FOR ANY PURPOSE OTHER THAN THE SPECIFIC PROJECT FOR WHICH IT WAS PREPARED. ANY REUSE WITHOUT WRITTEN VERIFICATION AND ADAPTATION BY THE ENGINEER FOR THE SPECIFIC PURPOSE INTENDED WILL BE AT THE USER'S SOLE RISK AND WITHOUT LIABILITY OR LEGAL EXPOSURE TO THE ENGINEER.

SEAL
REGISTERED PROFESSIONAL ENGINEER ROBERT A. TAMACDO S5607 STRUCTURAL STATE OF CALIFORNIA
11/17/2021

STUD FRAMING PLANS

LEASE FLEX. / WAREHOUSE BUILDINGS
FOR
MADERA INDUSTRIAL WHSE, LLC
S. SCHNOOR AVENUE, MADERA, CA

JOB NUMBER 21107
DESIGNED BY RT
DRAWN BY LM
DATE 9/17/2021
SHEET NUMBER A7.0

G:\Shared drives\DBKO\Company\PROJECTS\2021\JOB_WHSE\Partners-Fresno, CA\Plans, Calcs & Specs\Arch\Revit (DBKO)\Drawings\Fresno Property - Madera\WHSE-BLDG-A_2021-09-12.rvt
11/22/2021 2:59:18 PM

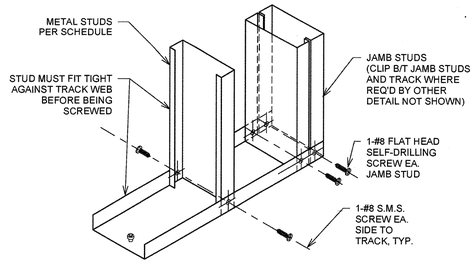

1 A7.1 TYPICAL STUD AND TRACK CONNECTION
1" = 1'-0"

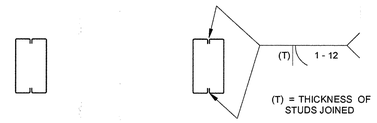

J1 - TYP DBL STUD JAMB

J2 - WELDED JAMB

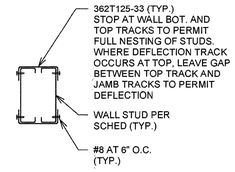

J3 - BOXED JAMB

2 A7.1 TYPICAL JAMB STUDS
1" = 1'-0"

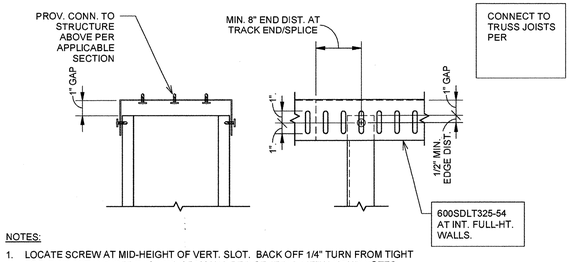

NOTES:
1. LOCATE SCREW AT MID-HEIGHT OF VERT. SLOT. BACK OFF 1/4" TURN FROM TIGHT FOR SLIP. STAND OFF BUSHING OPTIONAL PER GENERAL METAL STUD NOTES. ONE SCREW PER SLOT.
2. TRACK SIZE AND GAUGE AS NOTED - SLOTTED DEEP LEG TRACKS PER SCAFCO (WWW.SCAFCO.COM) - IAPMO ER-0283.
3. FASTENER SPACING PER WALL TYPE.

3 A7.1 TYP. DEFLECTION TRACK AT TOP OF FULL-HT. WALLS
3" = 1'-0"

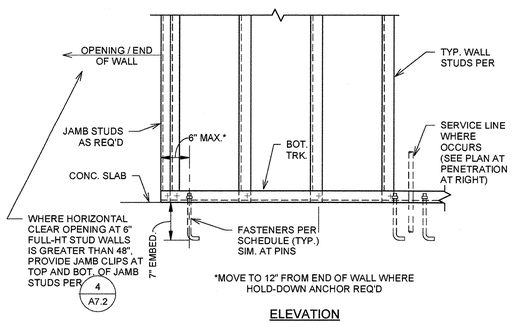

ELEVATION

BOTTOM TRACK FASTENER SCHEDULE	
EXTERIOR NON-BRG WALLS (UNLESS NOTED OTHERWISE)	3/8"Ø F1554 GR. 36 THREADED RODS W/ HILTI HY 200 EPOXY (2-3/8" MIN. EMBED.) AT 48" O.C. MAX. SPACING AND 6" FROM TRACK ENDS. INSTALL PER ICC ESR-3187
INTERIOR NON-BRG PARTITIONS (UNLESS NOTED OTHERWISE)	HILTI X-U POWDER ACTUATED FASTENER AT 32" O.C. MAX. SPA. (16" MAX. SPACING AT EXTERIOR WALLS AND FULL-HT. 8" STUD WALLS) AND 6" FROM TRACK ENDS. INSTALL PER ICC ESR-2269 W/ 1-1/4" MIN. EMBED. INTO SLAB

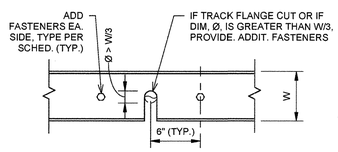

PLAN VIEW AT TRACK PENETRATION

4 A7.1 BOTTOM TRACK CONNECTION SCHEDULE
1" = 1'-0"

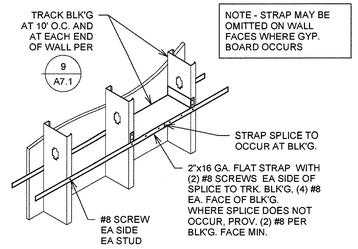

6 A7.1 FLAT STRAP LATERAL BRACING
3/4" = 1'-0"

CRC SCHEDULE

STUD WIDTH	CRC
2 1/2"	075U50-54
3 1/2" - 6"	150U50-54

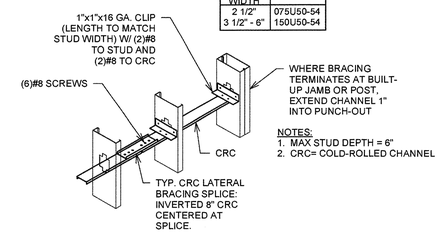

NOTES:
1. MAX STUD DEPTH = 6"
2. CRC= COLD-ROLLED CHANNEL

5 A7.1 COLD-ROLLED CHANNEL BRACING
3/4" = 1'-0"

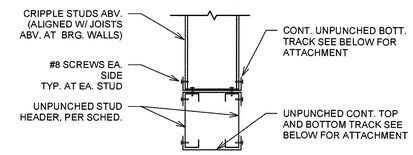

HEADER SECTION

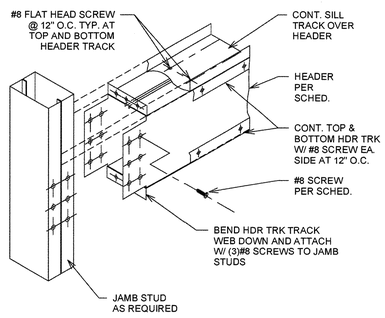

ISOMETRIC CONN. VIEW

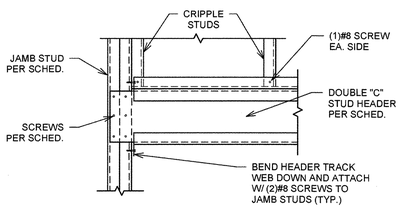

HEADER ELEV. AT CONN. TO JAMB STUDS

METAL STUD WALL BOX HEADER (BH) SCHEDULE						
MARK	OPENING SIZE	STUDS***	TRACKS**	TOTAL NO. OF SCREWS EA. END OF BOX HEADER*	PROFILE	REQ'D. JAMB STUDS PER 2 A7.1
BH1	0'-0" TO 4'-0"	(2) 600SYYY-YY	(2) 600T125-XX (UNPUNCHED)	(4)#8 SELF-DRILLING SCREWS (16 TOTAL)		NESTED JAMB STUD TYPE J1
BH2	4'-0" TO 10'-0"	(2) 600SYYY-YY	(2) 600T125-XX (UNPUNCHED)	(8)#8 SELF-DRILLING SCREWS (32 TOTAL)		(2) JAMB STUDS TYPE J2 / J3
BH3	10'-0" TO 16'-0"	(2) 800S162-54	(2) 600T125-54 (UNPUNCHED)	(8)#10 SELF-DRILLING SCREWS (32 TOTAL)		(2) JAMB STUDS TYPE J2 / J3

*DIST. SCREWS EVENLY EA. SIDE OF BOX HEADER TO EA. JAMB STUD

** "XX" = MATCH WALL BOT. TRACK THICKNESS PER SCHED.

*** "YYY-YY" = MATCH STUD SIZE AND THICKNESS PER WALL SCHED.

7 A7.1 BOX HEADER SCHEDULE (EXTERIOR WALLS)
1" = 1'-0"

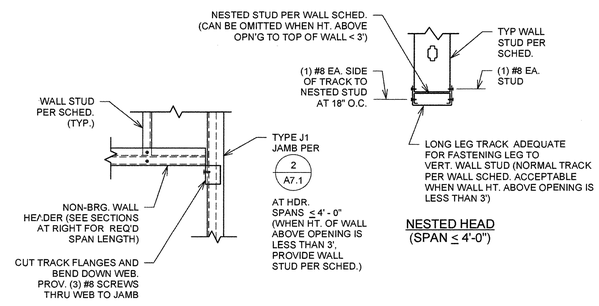

ELEVATION AT NON-BEARING WALL HEADER

8 A7.1 MTL STUD - TYPICAL HEADER AT NON-BRG. WALLS2
1" = 1'-0"

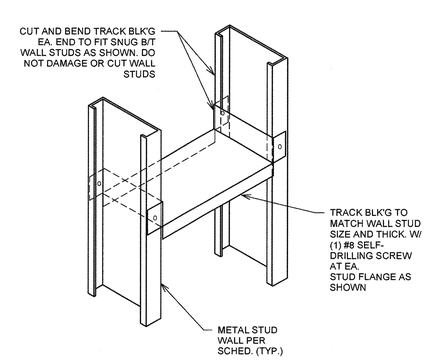

9 A7.1 TYPICAL STUD BLOCKING DETAIL
1" = 1'-0"

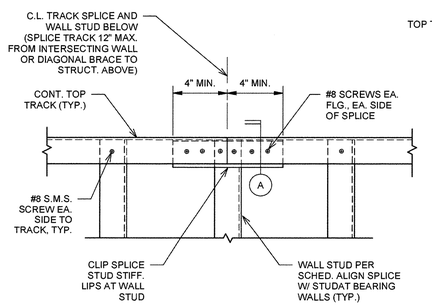

ELEVATION

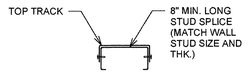

SECTION A

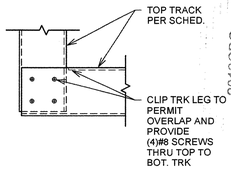

PLAN AT CORNER INTERSECTION

2013CBC
City of Madera
Building Department
The approval of these plans does not prevent the City of Madera from requiring correction of errors on these plans, in the plans specifications and construction. Subject to field inspection and approval of cribbing, cribbing and anchorage.
APPROVED
By:
Date: MAR 03 2022

10 A7.1 TYP. TOP TRACK SPLICE
3/4" = 1'-0"

DBKO DESIGN-BUILD
WHSE PARTNERS

DATE	REVISION	BY

ANY INFORMATION OR DATA ON THIS DRAWING IS NOT INTENDED TO BE SUITABLE FOR REUSE BY ANY PERSON, FIRM OR CORPORATION, FOR ANY PURPOSE OTHER THAN THE SPECIFIC PROJECT FOR WHICH IT WAS PREPARED. ANY REUSE WITHOUT WRITTEN VERIFICATION AND ADAPTATION BY THE ENGINEER FOR THE SPECIFIC PURPOSE INTENDED WILL BE AT THE USER'S SOLE RISK AND WITHOUT LIABILITY OR LEGAL EXPOSURE TO THE ENGINEER.

SEAL
REGISTERED PROFESSIONAL ENGINEER ROBERT A. TAMACHO S5607 STRUCTURAL STATE OF CALIFORNIA
11/17/2021

FRAMING DETAILS

LEASE FLEX. / WAREHOUSE BUILDINGS
FOR
MADERA INDUSTRIAL WHSE, LLC
S. SCHNOOR AVENUE, MADERA, CA

JOB NUMBER 21107
DESIGNED BY RT
DRAWN BY LM
DATE 9/17/2021
SHEET NUMBER A7.1

G:\Shared drives\DBKO\projects\PROJECTS\2016_WHSE Partners-Fresno, CA\Plans, Cells & Spreadsheets-Shop\DBKO\Drawings\Fresno Property - Materials\WHSE-BLDG\A_2021-09-13.rvt 11/22/2021 2:59:19 PM

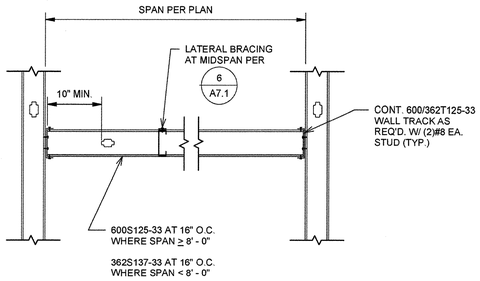

1 A7.2 CEILING JOISTS AT GYP. BOARD CEILING
3/4" = 1'-0"

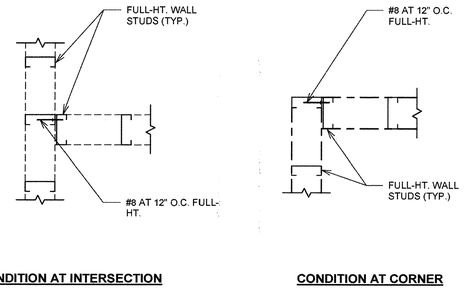

2 A7.2 TYP. WALL INTERSECTION DETAIL AT CORNERS/INTERSECTIONS
1" = 1'-0"

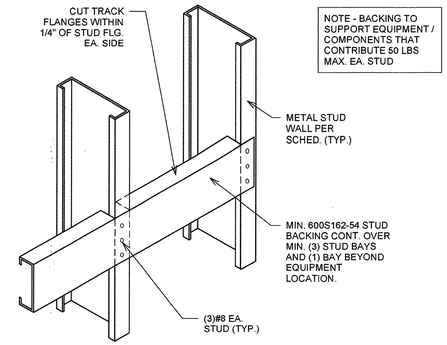

3 A7.2 TYPICAL TRACK BACKING AT WALL MOUNTED EQUIPMENT
1" = 1'-0"

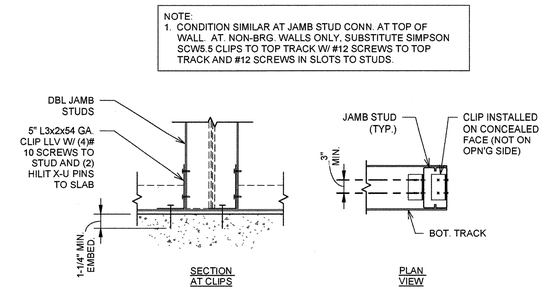

4 A7.2 JAMB CLIP DETAIL
3/4" = 1'-0"

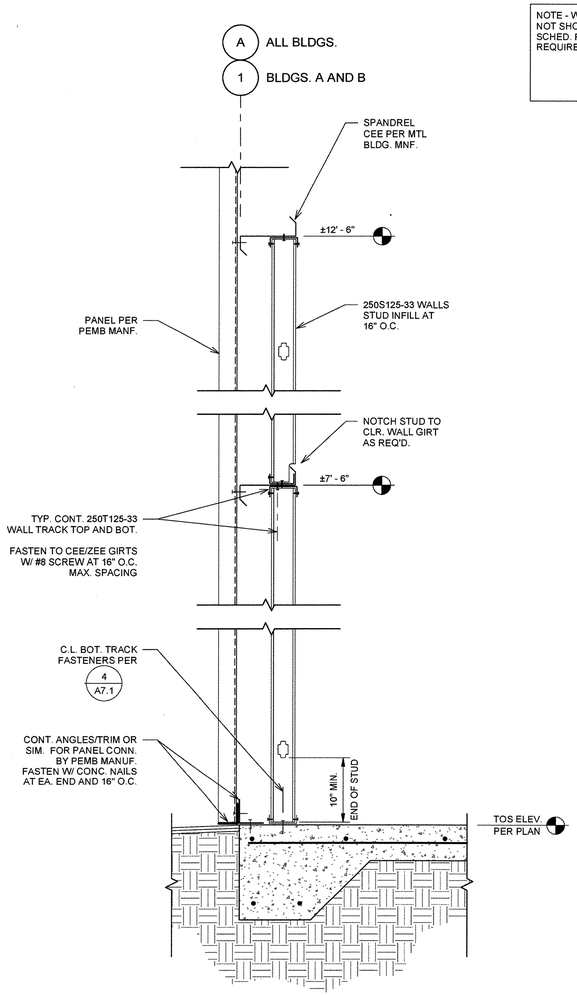

9 A7.2 TYP. EXT. WALL AT OFFICE ALONG GRID A (ALL BLDGS.)
1" = 1'-0"

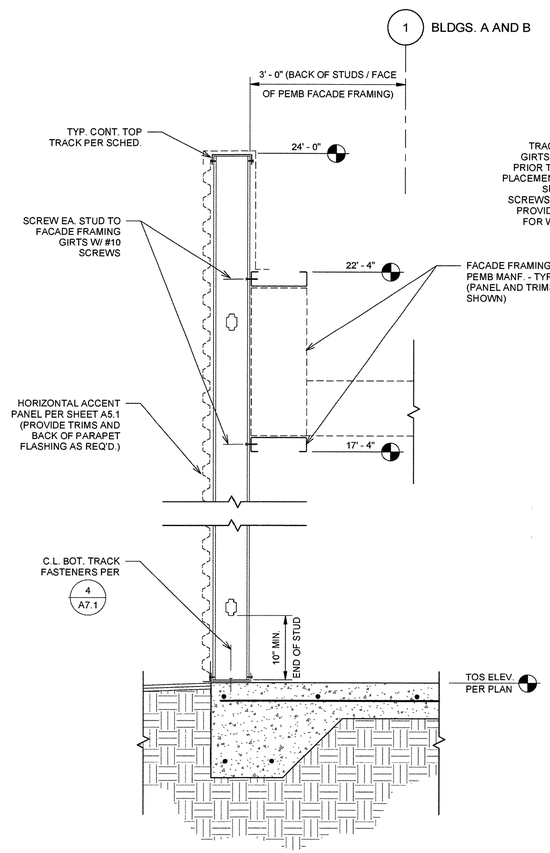

10 A7.2 ACCENT WALL DETAIL AT WEST END - BLDG. A AND B
1" = 1'-0"

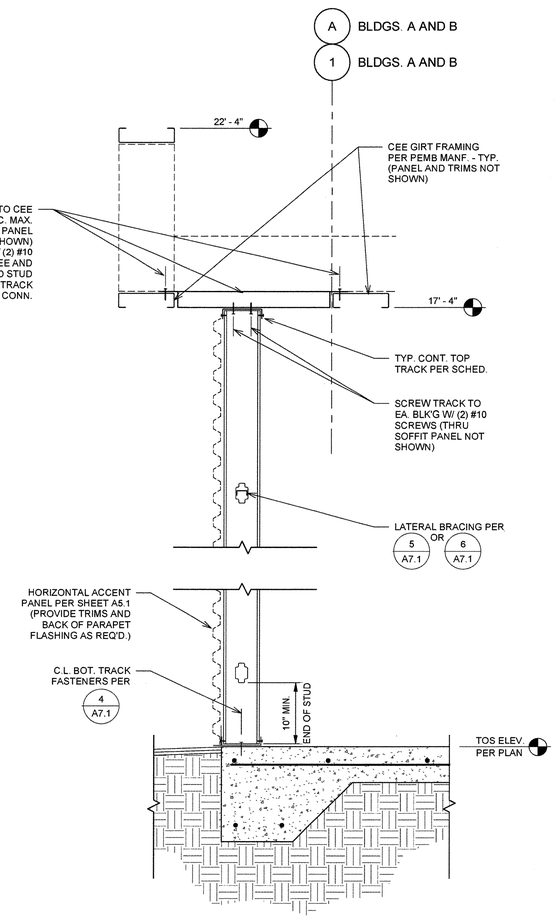

11 A7.2 ACCENT WALL DETAIL AT WEST END - BLDG. A AND B
1" = 1'-0"

2019CBC
City of Madera
Building Department
The approval of these plans does not prevent the City of Madera from requiring correction of errors or omissions in the plans, specifications or construction. Subject to field inspections and approvals under laws, codes and ordinances.
APPROVED
By:
Date: MAR 03 2022

DBKO DESIGN-BUILD
WHSE PARTNERS

DATE	REVISION	BY

ANY INFORMATION OR DATA ON THIS DRAWING IS NOT INTENDED TO BE SUITABLE FOR REUSE BY ANY PERSON, FIRM OR CORPORATION FOR ANY OTHER CONSTRUCTION PROJECT OR OTHER USE THAN THE SPECIFIC PROJECT. ANY REUSE WITHOUT WRITTEN VERIFICATION AND ADAPTATION BY THE ENGINEER FOR THE SPECIFIC PURPOSE INTENDED WILL BE AT THE USER'S SOLE RISK AND WITHOUT LIABILITY OR LEGAL EXPOSURE TO THE ENGINEER.

SEAL
REGISTERED PROFESSIONAL ENGINEER
ROBERT A. TAMKOCKO
S5607
STRUCTURAL
STATE OF CALIFORNIA
11/17/2021

FRAMING DETAILS (CONT.)

LEASE FLEX. / WAREHOUSE BUILDINGS
FOR
MADERA INDUSTRIAL WHSE, LLC
S. SCHNOOR AVENUE, MADERA, CA

JOB NUMBER	21107
DESIGNED BY	RT
DRAWN BY	LM
DATE	9/17/2021
SHEET NUMBER	A7.2

G:\Shared drives\DBKO\Company\PROJECTS\2019\JOB\SB Partners-Fresno, CA\Plans, Calcs & Specs\Arch-Shell (DBKO)\Drawings\Fresno Property - Madera\WHSE-BLDGS_2021-09-13.rvt
11/22/2021 3:59:21 PM

GENERAL NOTES:

DESIGN CRITERIA

CODE: 2019 CALIFORNIA BUILDING CODE (W/ CITY OF MADERAAMENDMENTS)
AISC 360-10, DESIGN SPECIFICATION FOR STRUCTURAL STEEL BUILDINGS
AISC 341-10, SEISMIC PROVISIONS FOR STEEL BUILDINGS
MBMA DESIGN MANUALS (LATEST EDITIONS)

GRAVITY LOADS

ROOF COLLATERAL DEAD LOAD.................................... 5 PSF
ROOF LIVE LOAD.. 20 PSF

WIND LOADS

BUILDING CLASSIFICATION.. II
BASIC WIND SPEED, V_{ULT}.. 94 MPH
WIND EXPOSURE.. C
TOPOGRAPHIC FACTOR, K_{zt}.. 1.0

SEISMIC LOADS

SEISMIC IMPORTANCE FACTOR, I_E............................... 1.0
OCCUPANCY CATEGORY.. II
SOIL SITE CLASS .... D
SPECTRAL RESPONSE COEFFICIENT, S_S 0.608
SPECTRAL RESPONSE COEFFICIENT, S_1 .... 0.237
SITE COEFFICIENT, F_a... 1.314
SPECTRAL RESPONSE COEFFICIENT, S_{DS} 0.532
SEISMIC DESIGN CATEGORY.. D

STRUCTURAL SYSTEM (PRE-ENGINEERED BLDG. BY OTHERS)

R.. 3.5 / 3.25 (OMRF / OCBF)
Ω_0.. 3.0 / 2.0
C_d.. 3.0 / 3.25
ρ.. 1.3 / 1.3

GENERAL CONDITIONS

1. THE CONTRACTOR SHALL EXAMINE THE STRUCTURAL DRAWINGS AND SHALL NOTIFY THE STRUCTURAL ENGINEER IN WRITING OF ANY DISCREPANCIES FOUND BEFORE PROCEEDING WITH THE WORK. THE CONTRACTOR SHALL VERIFY ALL DIMENSIONS, ELEVATIONS AND SITE CONDITIONS BEFORE STARTING WORK.
2. ALL OMISSIONS OR CONFLICTS BETWEEN THE VARIOUS ELEMENTS OF THE WORKING DRAWINGS SHALL BE BROUGHT TO THE ATTENTION OF THE ARCHITECT AND THE STRUCTURAL ENGINEER BEFORE PROCEEDING WITH ANY WORK SO INVOLVED.
3. SPECIFIC NOTES AND DETAILS SHALL TAKE PRECEDENCE OVER GENERAL NOTES AND TYPICAL DETAILS. WHERE THE NOTES, DRAWINGS, AND/OR SPECIFICATIONS DIFFER, THE MORE STRINGENT REQUIREMENT SHALL APPLY.
4. IF A SPECIFIC DETAIL IS NOT SHOWN FOR ANY PART OF THE WORK, THE CONSTRUCTION SHALL BE THE SAME AS FOR SIMILAR WORK.
5. WORKING DIMENSIONS SHALL NOT BE SCALED FROM PLANS, SECTIONS, OR DETAILS ON THESE DRAWINGS.
6. THE CONTRACTOR SHALL IMMEDIATELY NOTIFY THE ARCHITECT AND THE STRUCTURAL ENGINEER OF ANY CONDITION THAT, IN HIS OPINION, MIGHT ENDANGER THE STABILITY OF THE STRUCTURE OR CAUSE DISTRESS TO THE STRUCTURE.
7. THE CONTRACTOR SHALL SUPERVISE AND DIRECT HIS WORK AND HE SHALL BE SOLELY RESPONSIBLE FOR CONSTRUCTION MEANS, METHODS, TECHNIQUES, SEQUENCES AND PROCEDURES. PROVIDE ADEQUATE SHORING AND BRACING OF ALL STRUCTURAL MEMBERS DURING CONSTRUCTION. NOTIFY ENGINEER OF ALL FIELD CHANGES PRIOR TO INSTALLATION.
8. REFER TO THE ARCHITECTURAL DRAWINGS FOR INFORMATION NOT COVERED BY THESE GENERAL NOTES OR THE STRUCTURAL DRAWINGS OR APPROVED BY THE STRUCTURAL ENGINEER OF RECORD.
9. ALL CONSTRUCTION SHALL BE DONE WITH MATERIALS, METHODS, AND WORKMANSHIP ACCEPTED AS GOOD PRACTICE BY THE CONSTRUCTION INDUSTRY AND IN CONFORMANCE WITH THE PROVISIONS OF THE CBC AND STANDARDS REFERENCED THEREIN.
10. PIPES, DUCTS, SLEEVES, OPENINGS, POCKETS, CHASES, BLOCK-OUTS, ETC., SHALL NOT BE PLACED IN SLABS, FOUNDATIONS, ETC., NOR SHALL ANY STRUCTURAL MEMBER BE CUT FOR SUCH ITEMS, UNLESS SPECIFICALLY DETAILED ON THESE STRUCTURAL DRAWINGS.
11. ALTERNATE ASSEMBLIES AND MATERIALS WILL BE CONSIDERED FOR REVIEW. ENGINEER MAY REQUEST PAYMENT FOR REVIEW.
12. VERIFY ALL DIMENSIONS IN FIELD AND PROVIDE ADEQUATE SHORING AND BRACING OF ALL STRUCTURAL MEMBERS DURING CONSTRUCTION. NOTIFY ENGINEER OF ALL FIELD CHANGES PRIOR TO INSTALLATION. DISCREPANCIES FOUND BETWEEN STRUCTURAL DRAWINGS AND OTHER DOCUMENTS ARE TO BE NOTED IN WRITING TO THE ENGINEER PRIOR TO CONSTRUCTION.

JOBSITE SAFETY

1. THE ENGINEER (DBKO DESIGN+BUILD) HAS NOT BEEN RETAINED OR COMPENSATED TO PROVIDE DESIGN AND/OR CONSTRUCTION REVIEW SERVICES RELATED TO THE CONTRACTOR'S SAFETY PRECAUTIONS OR TO MEANS, METHODS, TECHNIQUES, SEQUENCES OR PROCEDURES FOR THE CONTRACTOR TO PERFORM THEIR WORK. THE UNDERTAKING OF PERIODIC SITE VISITS BY THE ENGINEER SHALL NOT BE CONSTRUED AS SUPERVISION OF ACTUAL CONSTRUCTION NOR MAKE THE ENGINEER RESPONSIBLE FOR PROVIDING A SAFE PLACE FOR THE PERFORMANCE OF WORK BY THE CONTRACTOR, SUBCONTRACTORS, SUPPLIERS OR THEIR EMPLOYEES, OR FOR ACCESS, VISITS, USE, WORK, TRAVEL, OR OCCUPANCY BY ANY PERSON. THE CONTRACTOR AND/OR HIS REPRESENTATIVES ARE RESPONSIBLE FOR JOB SITE SAFETY AS WELL AS ACTIVITIES RELATED TO MEANS, METHODS, TECHNIQUES, SEQUENCES AND PROCEDURES OF CONSTRUCTION.

FOUNDATION

STRUCTURAL DESIGN COMPLIES WITH MINIMUM REQUIREMENTS PER SOILS REPORT NUMBER 1-221-0369 PREPARED BY SALEM ENGINEERING GROUP, INC. DATED APRIL 28, 2021.

ALLOWABLE BEARING PRESSURE ON PAD FOOTINGS: 2,000 PSF

CONCRETE

1. CONCRETE SHALL CONFORM TO THE INDICATED REFERENCE CODES AND STANDARDS EXCEPT AS MODIFIED BELOW:

   ACI-301 - "STANDARD SPECIFICATIONS FOR STRUCTURAL CONCRETE"
   ACI-318 - "BUILDING CODE REQUIREMENTS FOR STRUCTURAL CONCRETE"
   ACI-305R - "HOT WEATHER CONCRETING"
   ACI-306R - "COLD WEATHER CONCRETING"
   ACI-304 - "GUIDE FOR MEASURING, MIXING, TRANSPORTING AND PLACING CONCRETE"

2. CONCRETE MIX SPECIFICATIONS

LOCATION	MIN f'c (PSI)	TEST AGE (DAYS)	MAX W/C RATIO (a)	AIR (b)	MAX. ALLOW. AGGREGATE (d)	NOTES
SLABS-ON-GRADE	3,500	28	0.48	--	1-1/2" @ 6" SOG	USE MAX. SIZE - WELL GRADED MIX. NORMAL WEIGHT
FOOTINGS	3,000	28	0.50	--	1-1/2"	NORMAL WEIGHT

   a. FLY ASH MAY BE ADDED TO ANY OF THE MIX DESIGNS SPECIFIED. MAXIMUM FLY ASH ADDED SHALL BE LIMITED TO 25% OF THE TOTAL WEIGHT OF CEMENTITIOUS MATERIAL.
   b. TOTAL AIR CONTENT IS SPECIFIED IN THE TABLE ABOVE. AIR CONTENT TOLERANCE SHALL BE ± 1.5 % AND SHALL BE MEASURED AT THE POINT OF PLACEMENT. (AFTER PUMPING IF APPLICABLE) ALL CONCRETE EXPOSED TO THE WEATHER SHALL HAVE AN APPROVED ADMIXTURE TO ENTRAIN AIR - 5% TOTAL AIR REQUIRED. CONCRETE THAT CAN BE SUBJECTED TO FREEZING AND THAWING DURING CONSTRUCTION SHALL BE AIR ENTRAINED.
   c. WATER/CEMENT (W/C) RATIO SHALL BE BASED ON THE TOTAL CEMENTITIOUS MATERIAL. CEMENTITIOUS MATERIALS INCLUDE CEMENT, FLY ASH, SILICA FUME, AND BLAST FURNACE SLAG.
   d. FOR SLABS-ON-GRADE, USE WELL GRADED MIX WITH THE MAX. AGGREGATE SIZE SPECIFIED USED IN THE MIX DESIGN. FOR ALL OTHERS, USE OF SMALLER AGGREGATE THAN INDICATED IS PERMITTED.
   e. USE TYPE II CEMENT IN ALL CONCRETE IN CONTACT WITH SOIL.

3. ALL CONCRETE MIXES SHALL SATISFY THE MORE STRINGENT OF THE MIX SPECIFICATIONS REQUIREMENTS. FOR EXAMPLE: A MIX WITH THE SPECIFIED W/C RATIO MAY RESULT IN A STRENGTH GREATER THAN THE f'c REQUIRED.
4. MIXING: COMPLY WITH ACI-301. DO NOT EXCEED THE AMOUNT OF WATER SPECIFIED IN THE APPROVED MIX. PROPORTIONS OF AGGREGATE TO CEMENT SHALL BE SUCH AS TO PRODUCE A DENSE, WORKABLE MIX, WHICH CAN BE PLACED WITHOUT SEGREGATION OR EXCESS FREE SURFACE WATER.
5. CONCRETE PROPORTIONS SHALL BE DETERMINED IN ACCORDANCE WITH THE PROVISIONS OF ACI 318, SECTION 5.2. ESTABLISH PROPORTIONS ON THE BASIS OF FIELD EXPERIENCE OR TRIAL MIXTURES OR BOTH. THE CONCRETE PERFORMANCE MIX SHALL INCLUDE THE AMOUNTS OF CEMENT, FINE AND COARSE AGGREGATE, WATER AND ADMIXTURES AS WELL AS THE WATER CEMENT RATIO, SLUMP, CONCRETE YIELD AND SUBSTANTIATING STRENGTH DATA IN ACCORDANCE WITH IBC 1905.3.
6. PROVIDE A 3/4 INCH CHAMFER AT ALL EXPOSED CONCRETE EDGES, UNLESS INDICATED OTHERWISE ON ARCHITECTURAL OR STRUCTURAL DRAWINGS.
7. SLUMP SHALL BE DETERMINED BY THE CONTACTOR. THE MIX DESIGN SHALL INDICATE THE SLUMP AND IT SHALL BE MEASURED AT THE JOBSITE WITH A TOLERANCE PER SPECS. GREATER SLUMP MAY BE ACHIEVED BY USING APPROVED ADMIXTURES. DO NOT ADD WATER TO THE MIX UNLESS SPECIFICALLY ALLOWED BY THE MIX DESIGN. TOTAL WATER (BATCH AND SITE ADDED) MAY NOT EXCEED THE WATER IN THE APPROVED MIX DESIGN.
8. ACCELERATED SET, OR HIGH EARLY STRENGTH MAY BE ACHIEVED BY USING APPROVED ADMIXTURES. ALL ADMIXTURES SHALL BE CHLORIDE FREE.
9. CURING: REFERENCE ACI 308 - STANDARD PRACTICE FOR CURING CONCRETE AND ACI-301 SECTION 5 - STANDARD SPECIFICATIONS FOR STRUCTURAL CONCRETE. THE CURING SHALL BE SUCH THAT THE MOISTURE CONTENT AND TEMPERATURE IS MAINTAINED IN A MANNER TO DEVELOP THE DESIRED STRUCTURAL PROPERTIES AND DURABILITY OF THE CONCRETE.

   SLABS-ON-GRADE - APPLY A LIQUID MEBRANE-FORMING CURING COMPOUND. APPLY AS SOON AS PRACTICAL AFTER FINISHING IN ACCORDANCE WITH MANUFACTURER'S REQUIREMENTS. LIQUID MEMBRANE CURING COMPOUNDS ARE TO BE COMPATIBLE WITH FUTURE FLOOR FINISHES OR BE REMOVED PRIOR TO APPLICATION OF THE FLOOR FINISHES.

10. JOINTING: PROVIDE ADEQUATE JOINTING TO MINIMIZE EFFECTS OF VOLUME CHANGE. JOINTS SHOWN MAY BE ADJUSTED AT CONTRACTOR'S OPTION, WITH PRIOR APPROVAL FROM ENGINEER.
11. NON-SHRINK GROUT SHALL BE CEMENT BASED AND HAVE A MINIMUM COMPRESSIVE STRENGTH OF F'c = 5,000 PSI AT 28 DAYS WHEN TESTED IN ACCORDANCE WITH ASTM C109.
12. SUBMIT REPORTS SHOWING THAT AGGREGATE IN CONCRETE HAS BEEN TESTED FOR AND DEMONSTRATES NEGLIGIBLE POTENTIAL FOR ALKALI REACTIVITY.
13. THE CONTRACTOR IS TO HAVE A MINIMUM OF 2 WORKING VIBRATORS PRIOR TO ANY CONCRETE PLACEMENT. WHEN CONCRETE IS GREATER THAN OR EQUAL TO 12 INCHES IN DEPTH, IT SHALL BE VIBRATED TO THE FULL DEPTH IN ACCORDANCE WITH ACI STANDARDS.
14. SUBMIT COLD AND HOT WEATHER PROTECTION PLANS TO THE STRUCTURAL ENGINEER OF RECORD FOR APPROVAL PRIOR TO THE PLACEMENT OF ANY CONCRETE.
15. PROVIDE CONCRETE SLABS-ON-GRADE WITH MINIMUM FLOOR FLATNESS/LEVELNESS NUMBERS IN ACCORDANCE W/ ASTM E1155 AS SHOWN BELOW. CONCRETE CONTRACTOR PLACING SLAB-ON-GRADE TO PROVIDE F-NUMBER TESTING IN ACCORDANCE WITH ASTM E1155 UPON REQUEST BY DBKO. CRITERIA MINIMUMS AS FOLLOWED: $FF_{MIN} = 35$, $FL_{MIN} = 25$

REINFORCING STEEL

1. REFERENCE STANDARDS: ACI "DETAILING MANUAL" (SP-66); CRSI MANUAL OF STANDARD PRACTICE (MSP-1)
2. MATERIALS: REINFORCING STEEL, TYPICAL: ASTM A615, GRADE 60. REINFORCING STEEL INDICATED ON DRAWINGS "TO BE WELDED" SHALL CONFORM TO ASTM A706, GRADE 60.
3. LAP SPLICES: LAP ALL CONTINUOUS REINFORCING BARS PER APPLICABLE SCHEDULE. PROVIDE CORNER BARS FOR ALL HORIZONTAL REINFORCEMENT.
4. MINIMUM CONCRETE COVER:

   CAST AGAINST EARTH:
   FOOTINGS.. 3 INCHES
   SLABS... 2 INCHES

   CAST AGAINST FORMED SURFACES:
   WEATHER FACE - #5 BARS AND SMALLER.................. 1-1/2 INCHES
   #6 BARS AND LARGER..................... 2 INCHES

   INTERIOR FACE - SLABS AND WALLS........................... 3/4 INCH
   BEAMS AND COLUMNS.................... 1-1/2 INCHES

   EXPOSED SURFACES:
   COLUMNS
   TO TIES..................................... 1-1/2 INCHES
   TO MAIN REINFORCING........... 2 INCHES
   WALLS....................................... 3/4 INCHES

   SLABS
   INTERIOR.................................. 3/4 INCHES
   EXTERIOR................................. 1 INCH

REINFORCING STEEL WELDING

1. REFERENCE STANDARDS: "ANSI/AWS D1.4 STRUCTURAL WELDING CODE - REINFORCING STEEL."
2. MATERIALS: GRADE 60 (ASTM A706). ALL GRADE 60 WELDED REINFORCING BARS WILL BE REJECTED UNLESS A MILL CERTIFICATE IS SUBMITTED TO THE ENGINEER OF RECORD INDICATING COMPLIANCE WITH ASTM A706. USE ONLY CERTIFIED WELDERS. USE ONLY FRESH E70XX ELECTRODES (AWS A5.1 OR A5.5).
3. BENDS IN WELDED REINFORCING STEEL ARE TO COMPLY WITH ACI STANDARDS. BENDS MUST NOT OCCUR WITHIN 3" OF ANY WELD. PROVIDE SPECIAL INSPECTION PER CBC.

EPOXY ADHESIVES - CONCRETE

1. EPOXY ADHESIVE SHALL BE HILTI HIT HY 200 (ICC REPORT #ESR-3187) OR SIMPSON SET-X EQUAL (ICC REPORT #ESR-2508).
2. INSTALLATION AND SPECIAL REQUIRED INSPECTION PER ICC REPORT.
3. DO NOT DISTURB ROD BETWEEN SPECIFIED GEL TIME AND CURE TIME.
4. CONTINUOUS SPECIAL INSPECTION OF INSTALLATION REQUIRED.

STRUCTURAL AND MISCELLANEOUS STEEL

FABRICATION AND ERECTION OF STEEL SHALL BE IN ACCORDANCE WITH THE FOLLOWING AMERICAN INSTITUTE OF STEEL CONSTRUCTION (AISC) STANDARDS AND SPECIFICATIONS:

1. MANUAL OF STEEL CONSTRUCTION, 14TH EDITION
2. CODE OF STANDARD PRACTICE FOR STEEL BUILDINGS AND BRIDGES, LATEST EDITION.
3. SPECIFICATION FOR STRUCTURAL JOINTS USING ASTM A325 OR A490 BOLTS.

STEEL SHALL CONFORM TO THE FOLLOWING STANDARDS:

TUBE COLUMNS - ASTM A500, GRADE B (Fy = 46,000 PSI)
WIDE FLANGE COLUMNS AND BEAMS - ASTM A992 GR50
ALL OTHER STEEL - ASTM A36 (Fy = 36,000 PSI)
BOLTS - ASTM A325 - PRETENSION UNLESS NOTED OTHERWISE (STEEL-TO-STEEL CONNECTIONS)
ASTM A307 (FASTENERS EMBEDED IN MASONRY)

STRUCTURAL STEEL WELDING

1. CONFORM TO THE AWS CODES D1.1 AND D1.3., AND USE ONLY CERTIFIED WELDERS.
2. WELDS NOT SPECIFIED ARE TO BE 1/4" CONTINUOUS FILLET MINIMUM.
3. USE DRY E70 ELECTRODES.
4. ALL FIELD WELDING TO BE DONE BY AWS CERTIFIED WELDERS.

WELDED HEADED STUDS

1. WELDED HEADED STUDS SHALL BE MADE FROM COLD DRAWN BAR STOCK CONFORMING TO THE REQUIREMENTS OF ASTM A108. MECHANICAL PROPERTIES SHALL BE IN ACCORDANCE WITH AWS D1.1, SECTION 7.
2. STUDS SHALL BE MANUFACTURED BY NELSON (OR APPROVED EQUAL). EMBEDMENT ANCHORS SHALL BE NELSON HEADED ANCHORS WITH FLUXED ENDS (OR APPROVED EQUAL).
3. STUDS SHALL BE AUTOMATICALLY END WELDED WITH SUITABLE STUD WELDING EQUIPMENT IN THE SHOP AT SPACINGS INDICATED ON THE DRAWINGS. ALL WELDS SHALL BE MADE IN ACCORDANCE WITH RECOMMENDATIONS OF THE MANUFACTURER AND AWS D1.1 SECTION 7.

STEEL DECK AND CONNECTIONS

DECK SHALL APPLY TO THE FOLLOWING CODES AND STANDARDS:

1. AISI "SPECIFICATIONS FOR THE DESIGN OF COLD-FORMED STEEL STRUCTURAL MEMBERS"
2. AWS D1.3-89 "SPECIFICATIONS FOR WELDING SHEET STEEL IN STRUCTURES"
3. ASTM AS DESIGNATED
4. EVALUATION REPORT ER-0217 (IAPMO)

DECK INSTALLATION:

1. POSITION ON SUPPORTING STEEL FRAMEWORK AND ADJUST TO FINAL POSITION WITH ENDS BEARING MINIMUM OF 2 INCHES ON SUPPORTING MEMBERS.
2. PLACE UNITS END-TO-END BEFORE PERMANENTLY FASTENING.
3. ALIGN RIBS OVER ENTIRE LENGTH

SHOP DRAWINGS

SUBMIT TWO SETS OF PRINTS AND ONE SET OF REPRODUCIBLES FOR REVIEW PRIOR TO FABRICATION FOR THE FOLLOWING:

1. STRUCTURAL AND MISCELLANEOUS STEEL (EMBEDS, BOLLARDS, LADDERS, ETC.)
2. CONCRETE REINFORCEMENT
3. PRE-ENGINEERED METAL BUILDING DRAWINGS AND CALCULATIONS

SUBMITTALS

SUBMIT FOR REVIEW PRIOR TO INSTALLATION/FABRICATION FOR:
A) CONCRETE INSERTS
B) EPOXY ADHESIVES

SPECIAL INSPECTIONS

1. THE SPECIAL INSPECTOR/QC SPECIALIST FOR ALL WORK OUTLINED IN THE CALIFORNIA BUILDING CODE SECTION 1704 SHALL BE A QUALIFIED PERSON WHO SHALL DEMONSTRATE HIS COMPETENCE TO THE SATISFACTION OF THE BUILDING OFFICIAL FOR INSPECTION OF THE PARTICULAR TYPE OF CONSTRUCTION OR OPERATION REQUIRING SPECIAL INSPECTION, AND SHALL BE CHARGED WITH THE DUTIES AND RESPONSIBILITIES AS OUTLINED IN CBC 1704.
2. THE OWNER, CONTRACTOR, SPECIAL INSPECTOR OR INSPECTION AGENCY AND PROJECT ENGINEER AND/OR ARCHITECT SHALL COMPLETE THE SPECIAL INSPECTION AND TESTING AGREEMENT TO THE SATISFACTION OF THE GOVERNING BUILDING DEPARTMENT.
3. THE SPECIAL INSPECTOR SHALL BE RESPONSIBLE FOR COMPLETING, MAINTAINING AND RESUBMITTING ALL SPECIAL INSPECTION LOGS AND FORMS AS REQUIRED BY THE BUILDING DEPARTMENT. ALL LOGS AND REPORTS ARE TO BE COMPLETED WITHIN ONE WEEK OF INSPECTIONS PERFORMED.
4. CONTRACTOR RESPONSIBILITY: EACH CONTRACTOR OR SUB-CONTRACTOR RESPONSIBLE FOR THE CONSTRUCTION ITEMS OF THE WIND AND/OR SEISMIC RESISTING SYSTEM THAT ARE LISTED IN THE TABLE BELOW SHALL SUBMIT A WRITTEN STATEMENT OF RESPONSIBILITY TO THE BUILDING OFFICIAL AND THE OWNER PRIOR TO THE COMMENCEMENT OF WORK REQUIRING SPECIAL INSPECTION. THE CONTRACTOR'S STATEMENT OF RESPONSIBILITY SHALL CONTAIN THE FOLLOWING:
   A) ACKNOWLEDGEMENT OF AWARENESS OF THE SPECIAL REQUIREMENTS CONTAINNED IN THE SPECIAL INSPECTIONS TABLE BELOW.
   B) ACKNOWLEDGEMENT THAT CONTROL WILL BE EXERCISED TO OBTAIN CONFORMANCE WITH THE CONSTRUCTION DOCUMENTS APPROVED BY THE BUILDING OFFICIAL.
   C) PROCEDURES FOR EXERCISING CONTROL WITHIN THE CONTRACTOR'S ORGANIZATION, THE METHOD AND FREQUENCY OF REPORTING AND THE DISTRIBUTION OF THE REPORTS
   D) IDENTIFICATION AND QUALIFICATIONS OF THE PERSON(S) EXERCISING SUCH CONTROL AND THEIR POSITION(S) IN THE ORGANIZATION.
5. PROVIDE SPECIAL INSPECTION IN ACCORDANCE WITH CBC SECTION 1704 AND AISC 360-10/341-10 FOR THE FOLLOWING:

   GEOTECHNICAL

   SPECIAL INSPECTION BY GEOTECHNICAL ENGINEER OF RECORD IS TO BE PROVIDED IN COMPLIANCE WITH CBC SECTION 1705.6 FOR THE FOLLOWING ITEMS AS APPLICABLE:

   -SITE EXCAVATION, GRADING, BACKFILL, SUBGRADE PREPARATION
   -VERIFICATION OF SOIL BEARING CAPACITY
   -PLACEMENT OF STRUCTURAL FILL AND SOIL COMPACTION
   -PLACEMENT AND COMPACTION OF FOUNDATION AND RETAINING WALL BACKFILL

VERIFICATION AND INSPECTION	TYPE OF INSPECTION	CBC REFERENCE
TAKE CONCRETE CYLINDERS AS REQUIRED. VERIFY SLUMP, STRENGTH, AIR CONTENT, PLACEMENT, AND TEMP.	CONTINUOUS	TABLE 1704.4 ITEMS 4, 5, AND 6
INSPECTION OF REINFORCING STEEL AT CONCRETE CONSTRUCTION, INCLUDING PLACEMENT OF REINFORCING STEEL FOR COVER, SIZE, LOCATION AND GRADE	PERIODIC	TABLE 1704.4 ITEM 1
INSPECTION OF CONCRETE FOR PROPER PLACEMENT TECHNIQUES	CONTINUOUS	SECTIONS 1905.9, 1905.10, 1914.7, AND 1914.8
FABRICATION AND ERECTION OF STRUCTURAL STEEL	PERIODIC	AISC 360-10, SECT. N5.7
WELDING OF STRUCTURAL STEEL FOR SINGLE PASS FILLET WELDS < 5/16", AND FLOOR/ROOF DECK WELDS	PERIODIC	AISC 360-10, SECT. N5.4 AISC 341-10, SECT. J6
HIGH STRENGTH BOLTING (PRETENSIONED)	PERIODIC	AISC 360-10, SECT. N5.6 RCSC SECTION 9.2 AISC 341-10, SECT. J7
~~COLD-FORMED STEEL DECK~~	~~PERIODIC~~	~~CBC TABLE 1705.2.2 ITEM 1~~
EPOXY ANCHORS	CONT.	CBC TABLE 1705.3 ITEM 4 ICC ESR-3187

ABBREVIATIONS

AB	ANCHOR BOLT	FND	FOUNDATION	OSF	OUTSIDE FACE
ALT	ALTERNATE	FG	FINISHED GRADE	PEMB	PRE-ENGINEERED METAL BLDG.
APPROX.	APPROXIMATE	FLFR	FLUSH FRAMED	PSF	POUNDS PER SQUARE FOOT
BTM/BOT	BOTTOM	FLG	FLANGE	PSI	POUNDS PER SQUARE INCH
BRG	BEARING	FLR	FLOOR	R	RADIUS
BTW	BETWEEN	FP	FULL PENETRATION	REF	REFERENCE
B/T	BETWEEN	FT	FOOT	REINF	REINFORCEMENT
CJ	CONTROL JOINT	FTG	FOOTING	REQ'D	REQUIRED
CLR	CLEAR	FS	FAR SIDE	S	SLOPE
CMU	CONCRETE MASONRY UNIT	GA	GAUGE	SCH'D	SCHEDULED
COL	COLUMN	GALV	GALVANIZED	SEC	SECTION
CONC	CONCRETE	GR	GRADE	SF	SQUARE FOOT
CONN	CONNECTION	HDG	HOT-DIPPED GALV.	SHT	SHEET
CONST	CONSTRUCTION	HOR	HORIZONTAL	SIM	SIMILAR
CONT	CONTINUOUS	HT	HEIGHT	SPA	SPACE
CONTR	CONTRACTOR	HSS	HOLLOW STRUCT. SECTION	SPCS	SPACES
CTR	CENTER	IN	INCH	SPEC	SPECIFICATIONS
DCJ	DOWELED CONTROL JOINT	INT	INTERIOR	STND	STANDARD
DET	DETAIL	JT	JOINT	STL	STEEL
DIA	DIAMETER	LL	LIVE LOAD	STRUCT	STRUCTURAL
DIAG	DIAGONAL	LOC	LOCATION	T	TOP
DIM	DIMENSION	MAX	MAXIMUM	THK	THICK
DL	DEAD LOAD	MB	MACHINE BOLT	TOC	TOP OF CONCRETE
EA	EACH	MECH	MECHANICAL	TOD	TOP OF DECK
EF	EACH FACE	MFR/MNF	MANUFACTURER	TOS	TOP OF STEEL
ELEV	ELEVATION	MIN	MINIMUM	TOW	TOP OF WALL
EOR	ENGINEER OF RECORD	MISC	MISCELLANEOUS	TS	TUBE STEEL
EQ	EQUAL	NO	NUMBER	TYP	TYPICAL
EQUIP	EQUIPMENT	NS	NEAR SIDE	UNO	UNLESS NOTED OTHERWISE
ES	EACH SIDE	NTS	NOT-TO-SCALE	W/	WITH
EW	EACH WAY	OC	ON-CENTER	WT.	WEIGHT
EXIST	EXISTING	OH	OPPOSITE HAND		
EXT	EXTERIOR	OPNG	OPENING		

2019CBC City of Madera Building Department
The approval of these plans does not prevent the City of Madera from requiring correction of errors or omissions in the plans, specifications or construction. Subject to field inspections and approvals. Laws, Codes and Ordinances
APPROVED
By:
Date: MAR 0 3 2022

STRUCTURAL INDEX OF DRAWINGS.

SHEET NUMBER	SHEET TITLE	ISSUE DATE	CURRENT REVISION	REVISION DATE
S1.0	GENERAL NOTES	9/17/2021		
S2.0A	FOUNDATION PLAN	9/17/2021	2	11/17/2021
S2.1	CONTROL JOINT PLAN	9/17/2021		
S3.0	SECTIONS AND DETAILS	9/17/2021		
S3.1	FOUNDATION DETAILS	9/17/2021		
S3.2	LOADING DOCK DETAILS	9/17/2021		

DBKO DESIGN BUILD LIC#1032283

WHSE [PARTNERS]

BY	REVISION	DATE

ANY INFORMATION OR DATA ON THIS DRAWING IS NOT INTENDED TO BE SUITABLE FOR REUSE BY ANY PERSON, FIRM, CORPORATION, OR ANY OTHERS ON EXTENSIONS OF THIS PROJECT OR FOR ANY USE ON ANY OTHER PROJECT. ANY REUSE WITHOUT WRITTEN VERIFICATION AND ADAPTATION BY THE ENGINEER FOR THE SPECIFIC PURPOSE INTENDED WILL BE AT THE USER'S SOLE RISK AND WITHOUT LIABILITY OR LEGAL EXPOSURE TO THE ENGINEER.

SEAL
REGISTERED PROFESSIONAL ENGINEER ROBERT A. TAMACCIO S5607 STRUCTURAL STATE OF CALIFORNIA
11/17/2021

GENERAL NOTES

LEASE FLEX. / WAREHOUSE BUILDINGS
FOR
MADERA INDUSTRIAL WHSE, LLC
S. SCHNOOR AVENUE, MADERA, CA

JOB NUMBER 21107
DESIGNED BY RT
DRAWN BY LM
DATE 9/17/2021
SHEET NUMBER S1.0

G:\Shared drives\DBKOmpany\PROJECTS\20106_WHSE Partners-Fresno, CA\Plans, Calcs & Specs\Arch-Struct (DBKO)\Drawings\Franco Property - Madera\WHSE-BLDGA_2021-09-12.rvt
11/22/2021 2:59:38 PM

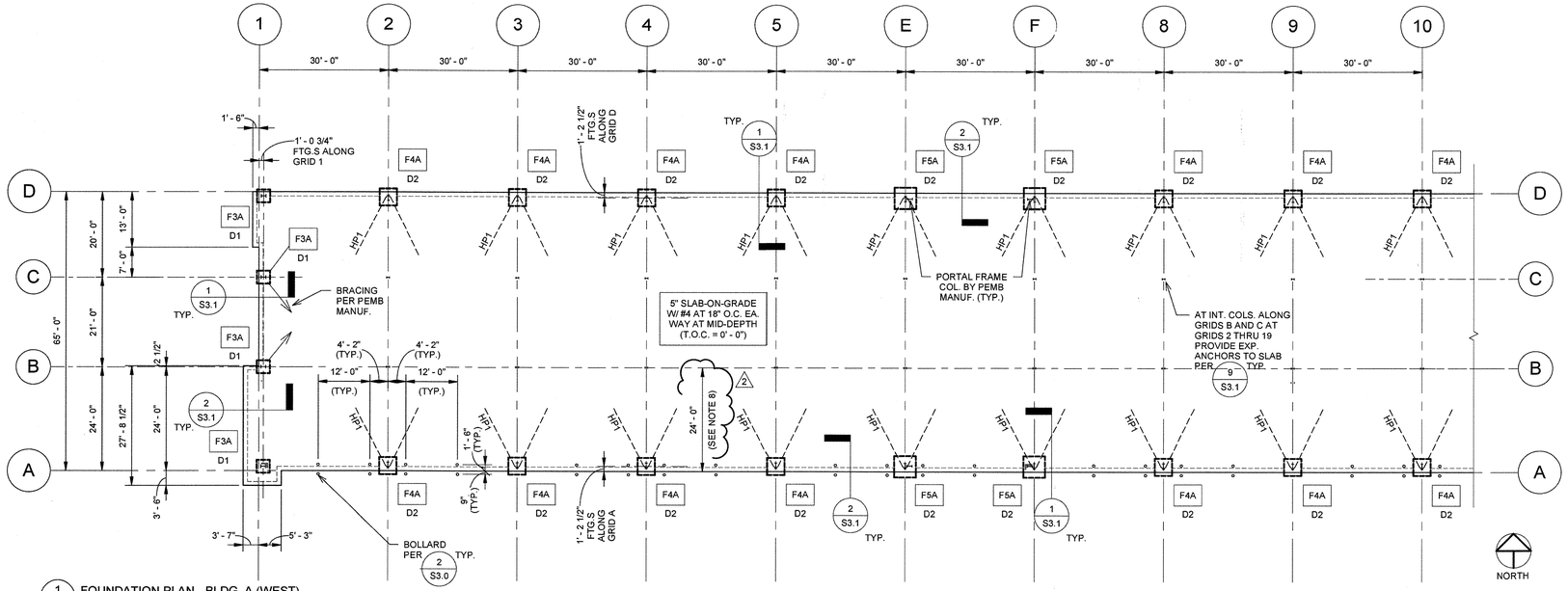

1 S2.0A FOUNDATION PLAN - BLDG. A (WEST)
1/16" = 1'-0"

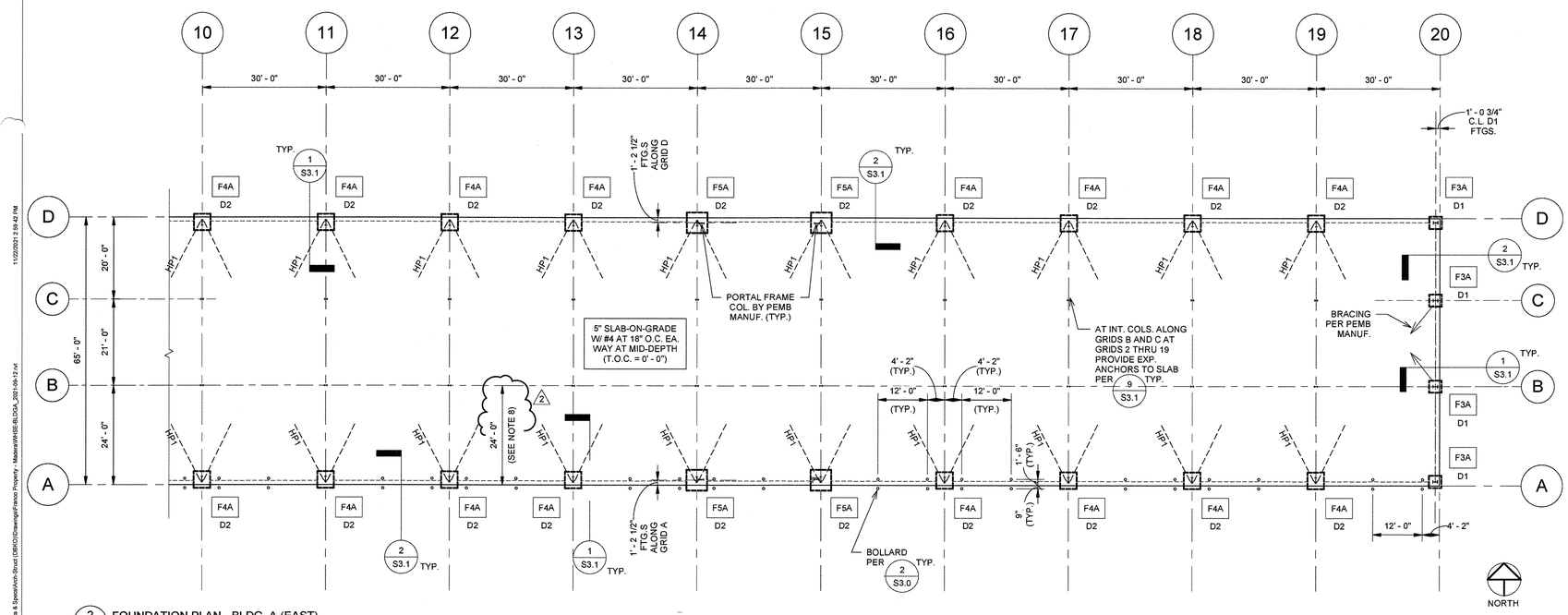

2 S2.0A FOUNDATION PLAN - BLDG. A (EAST)
1/16" = 1'-0"

FOUNDATION PLAN NOTES:

1. FIELD VERIFY ALL DIMENSIONS WITH EXISTING BEFORE STARTING CONSTRUCTION.
2. COORDINATE SLAB PLACEMENT LOCATIONS AND PHASES WITH DBKO DESIGN+BUILD. SEE SHEET S2.2 FOR CONTROL JOINT LAYOUT. SUBMIT ALTERNATE LAYOUTS FOR APPROVAL.
3. FOR SLAB-ON-GRADE SUBGRADE PREPARATION, SEE DETAIL 1 S3.0
4. HP# - DENOTES HAIRPIN PER SCHED. SEE 6 S3.0
5. FX — DENOTES FOOTING PER SCHED.
   DX — DENOTES ANCHOR BOLT SIZE AND CONFIGURATION PER PEMB DRWGS. AND EMBEDMENT PER FTG. SCHED. THIS SHEET AND APPLICABLE DETAILS

   USE F1554, GR. 36 THREADED RODS W/ HEAVY HEX NUTS AND WASHERS AS SHOWN IN DETAILS.
6. AT DOOR JAMB ANCHORS, PROVIDE 1/2"Ø KWIK BOLT TZ ANCHORS PER ICC ESR-1917 W/ MIN. HOLE DEPTH OF 2-5/8" (1/2"Ø DRILL BIT).
7. -X' - Y" — TOF ELEV. THIS SIDE OF LINE; -X' - Y" — TOF ELEV. THIS SIDE OF LINE — DENOTES STEP FOOTING PER 5 S3.0
8. PROVIDE 15 MIL VAPOR BARRIER BETWEEN GRIDS A AND B FOR THE FULL LENGTH OF THE BUILDING.

FOOTING SCHEDULE

MARK	QUANTITY	WIDTH	LENGTH	THICK NESS	TOP OF FTG. ELEV.*	BOT. OF FTG. ELEV*	REINFORCEMENT	MIN. ANCHOR EMBED.
F3A	8	3' - 0"	3' - 0"	18"	-8"	-2' - 2"	(3) #4 EA. WAY (TOP) (4) #5 EA. WAY (BOT.)	8"
F4A	28	4' - 0"	4' - 0"	18"	-8"	-2' - 2"	(3) #4 EA. WAY (TOP) (5) #5 EA. WAY (BOT.)	8"
F5A	8	5' - 0"	5' - 0"	18"	-8"	-2' - 2"	(3) #4 EA. WAY (TOP) (6) #5 EA. WAY (BOT.)	12"

*NOTE - FOOTING ELEVATIONS RELATIVE TO FIN. FLR. = 0' - 0" (EL. 258.30 PER CIVIL)

2019CBC
City of Madera
Building Department
The approval of these plans does not prevent the City of Madera from requiring correction of errors or omissions in the plans, specifications or construction. Subject to field inspections and approval with Codes and ordinances.
APPROVED
By:
Date: MAR 03 2022

DBKO DESIGN-BUILD
WHSE PARTNERS

REVISION	BY
2 PLAN CHECK RESPONSE	

DATE	REVISION
11/17/2021	2 PLAN CHECK RESPONSE

ANY INFORMATION OR DATA ON THIS DRAWING IS NOT INTENDED TO BE SUITABLE FOR REUSE BY ANY PERSON, FIRM OR CORPORATION FOR ANY OTHER PROJECT OR EXTENSION TO THIS PROJECT. ANY REUSE WITHOUT WRITTEN VERIFICATION AND ADAPTATION BY THE ENGINEER FOR THE SPECIFIC PURPOSE INTENDED WILL BE AT THE USER'S SOLE RISK AND WITHOUT LIABILITY OR LEGAL EXPOSURE TO THE ENGINEER.

SEAL
REGISTERED PROFESSIONAL ENGINEER
ROBERT A. YAMACOO
S5607
STRUCTURAL
STATE OF CALIFORNIA
11/17/2021

FOUNDATION PLAN
LEASE FLEX. / WAREHOUSE BUILDINGS
FOR
MADERA INDUSTRIAL WHSE, LLC
S. SCHNOOR AVENUE, MADERA, CA

JOB NUMBER	21107
DESIGNED BY	RT
DRAWN BY	LM
DATE	9/17/2021
SHEET NUMBER	S2.0A

G:\Shared drives\DBKOCompany\PROJECTS\20106_WHSE Partners-Fresno, CA\Plans, Calcs & Specs\Arch-Bldg\DBKO\Drawings\Flexspace Property - Madera\WHSE-BLDGA_2021-09-12.rvt
11/22/2021 2:59:42 PM

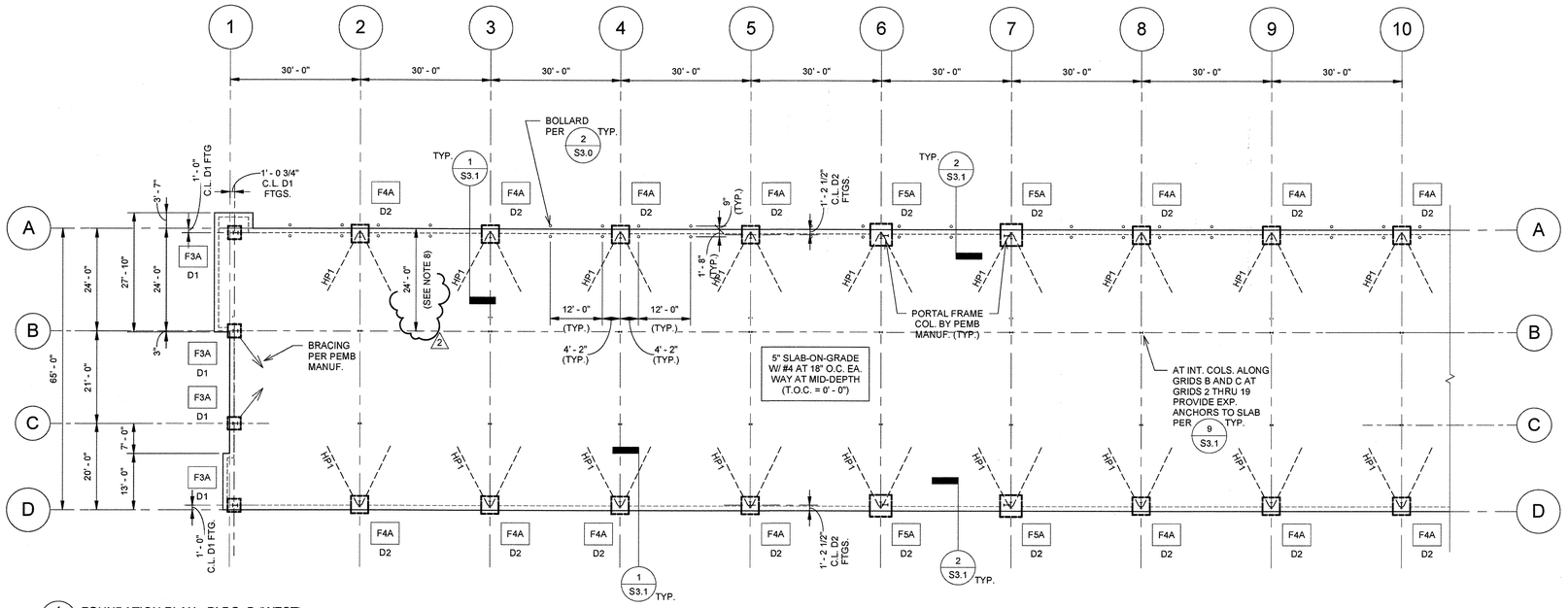

1 / S2.0B FOUNDATION PLAN - BLDG. B (WEST)
1/16" = 1'-0"

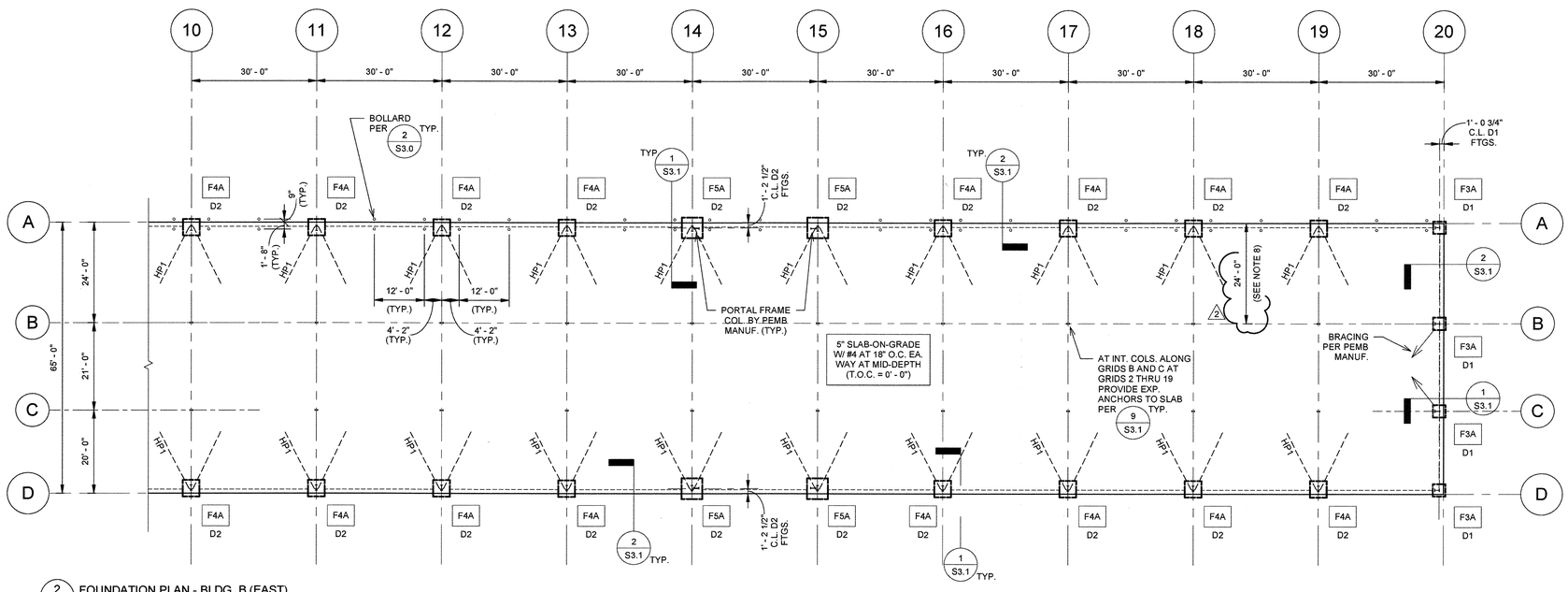

2 / S2.0B FOUNDATION PLAN - BLDG. B (EAST)
1/16" = 1'-0"

FOUNDATION PLAN NOTES:

1. FIELD VERIFY ALL DIMENSIONS WITH EXISTING BEFORE STARTING CONSTRUCTION.
2. COORDINATE SLAB PLACEMENT LOCATIONS AND PHASES WITH DBKO DESIGN+BUILD. SEE SHEET S2.2 FOR CONTROL JOINT LAYOUT. SUBMIT ALTERNATE LAYOUTS FOR APPROVAL.
3. FOR SLAB-ON-GRADE SUBGRADE PREPARATION, SEE DETAIL 1 / S3.0
4. HP# - DENOTES HAIRPIN PER SCHED. SEE 6 / S3.0
5. FX — DENOTES FOOTING PER SCHED.
   DX — DENOTES ANCHOR BOLT SIZE AND CONFIGURATION PER PEMB DRWGS. AND EMBEDMENT PER FTG. SCHED. THIS SHEET AND APPLICABLE DETAILS

   USE F1554, GR. 36 THREADED RODS W/ HEAVY HEX NUTS AND WASHERS AS SHOWN IN DETAILS.
6. AT DOOR JAMB ANCHORS, PROVIDE 1/2"Ø KWIK BOLT TZ ANCHORS PER ICC ESR-1917 W/ MIN. HOLE DEPTH OF 2-5/8" (1/2"Ø DRILL BIT).
7. -X' - Y" / -X' - Y" — TOF ELEV. THIS SIDE OF LINE / TOF ELEV. THIS SIDE OF LINE — DENOTES STEP FOOTING PER 5 / S3.0
8. PROVIDE MIN. 15 MIL VAPOR BARRIER BETWEEN GRIDS A AND B FOR THE FULL LENGTH OF THE BUILDING. (2)

2019CBC
City of Madera
Building Department
The approval of these plans does not prevent the City of Madera from requiring correction of errors or omissions in the plans, specifications or construction. Subject to field inspections and approval of the applicable codes and ordinances.
APPROVED
By:
Date: MAR 03 2022

FOOTING SCHEDULE

MARK	QUANTITY	WIDTH	LENGTH	THICKNESS	TOP OF FTG. ELEV.*	BOT. OF FTG. ELEV*	REINFORCEMENT	MIN. ANCHOR EMBED.
F3A	8	3' - 0"	3' - 0"	18"	-8"	-2' - 2"	(3) #4 EA. WAY (TOP) (4) #5 EA. WAY (BOT.)	8"
F4A	28	4' - 0"	4' - 0"	18"	-8"	-2' - 2"	(3) #4 EA. WAY (TOP) (5) #5 EA. WAY (BOT.)	8"
F5A	8	5' - 0"	5' - 0"	18"	-8"	-2' - 2"	(3) #4 EA. WAY (TOP) (6) #5 EA. WAY (BOT.)	12"

*NOTE - FOOTING ELEVATIONS RELATIVE TO FIN. FLR. = 0' - 0" (EL. 258.30 PER CIVIL)

DBKO DESIGN+BUILD
WHSE PARTNERS

DATE	REVISION	BY
11/17/2021	2 PLAN CHECK RESPONSE	

ANY INFORMATION OR DATA ON THIS DRAWING IS NOT INTENDED TO BE SUITABLE FOR REUSE BY ANY PERSON, FIRM OR CORPORATION FOR ANY PURPOSE OTHER THAN THE SPECIFIC PROJECT FOR WHICH IT WAS PREPARED. ANY REUSE WITHOUT WRITTEN VERIFICATION AND ADAPTATION BY THE ENGINEER FOR THE SPECIFIC PURPOSE INTENDED WILL BE AT THE USER'S SOLE RISK AND WITHOUT LIABILITY OR LEGAL EXPOSURE TO THE ENGINEER.

SEAL: REGISTERED PROFESSIONAL ENGINEER ROBERT A. TAMAGNO S5607 STRUCTURAL STATE OF CALIFORNIA 11/17/2021

FOUNDATION PLAN

LEASE FLEX. / WAREHOUSE BUILDINGS
FOR
MADERA INDUSTRIAL WHSE, LLC
S. SCHNOOR AVENUE, MADERA, CA

JOB NUMBER: 21107
DESIGNED BY: RT
DRAWN BY: LM
DATE: 9/17/2021
SHEET NUMBER: S2.0B

G:\Shared drives\DBKO\Company\PROJECTS\21106_MHSB\Partners-Fresno, CA\Plans, Calcs & Specs\Arch-Struct (SKMD)\Drawings\Fresno Property - Materials\WHSE-BLDGB_2021-09-17.rvt
11/22/2021 3:31:58 PM

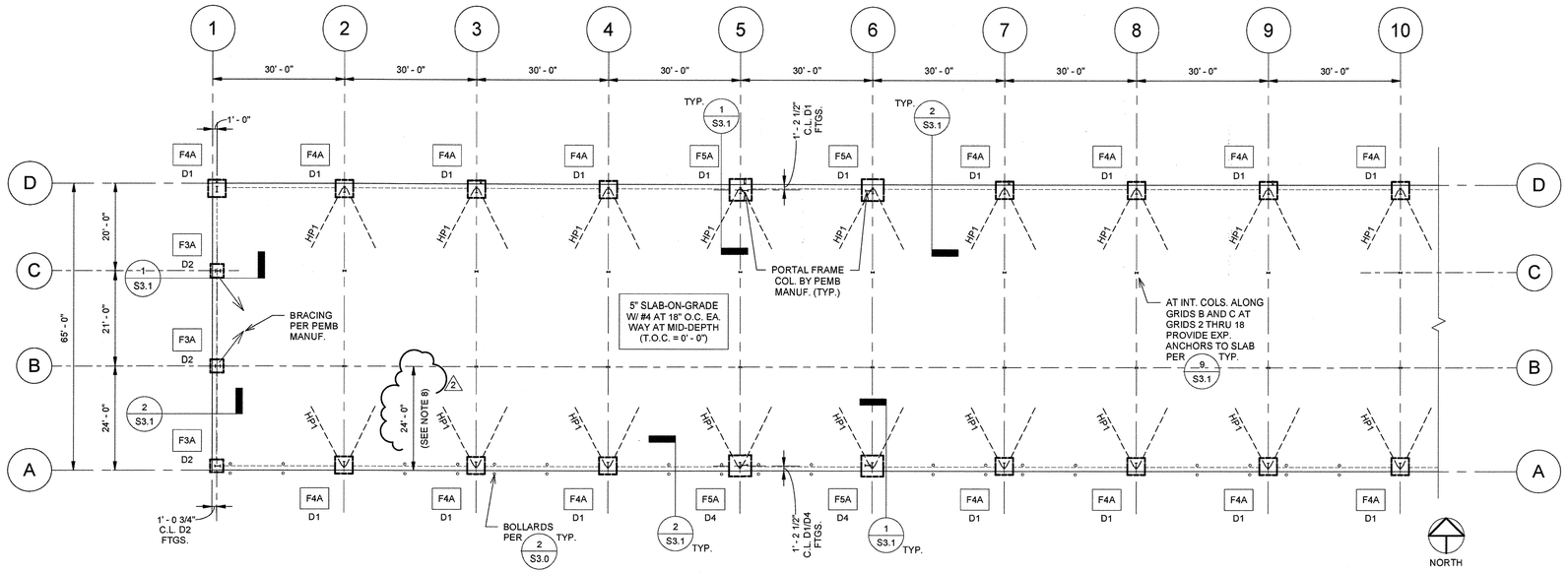

1 S2.0C FOUNDATION PLAN - BLDG. C (WEST)
1/16" = 1'-0"

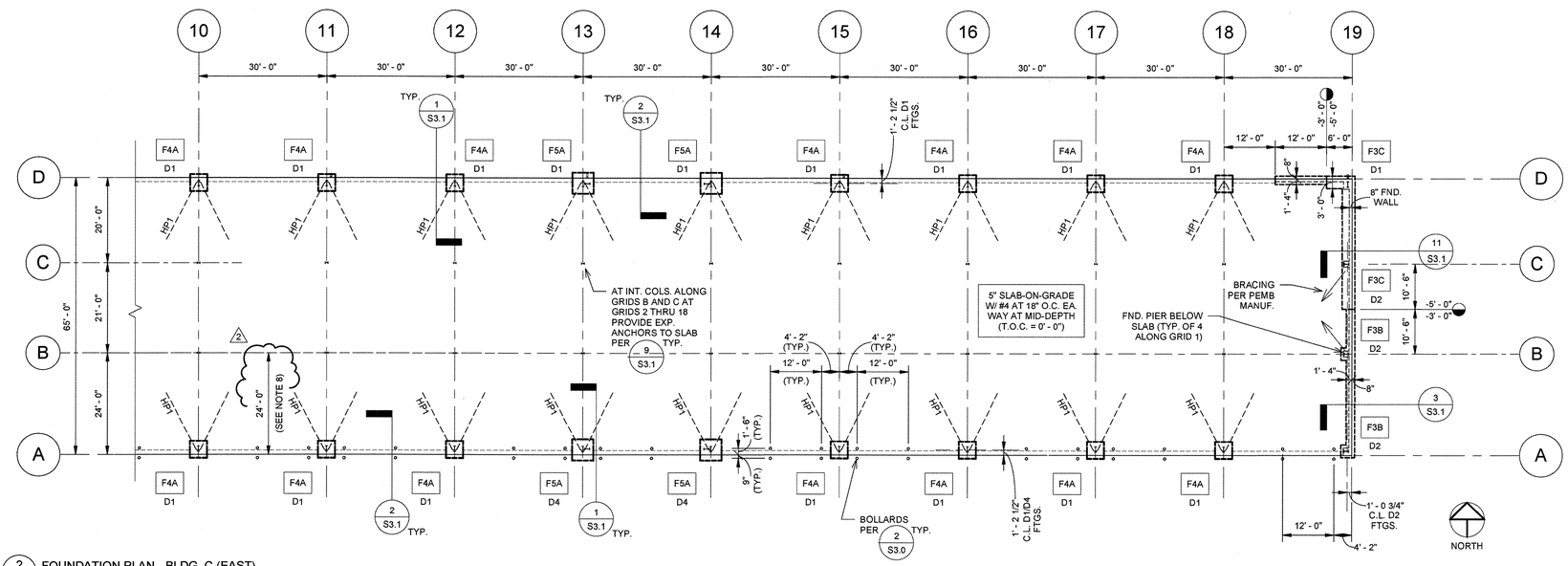

2 S2.0C FOUNDATION PLAN - BLDG. C (EAST)
1/16" = 1'-0"

FOUNDATION PLAN NOTES:

1. FIELD VERIFY ALL DIMENSIONS WITH EXISTING BEFORE STARTING CONSTRUCTION.
2. COORDINATE SLAB PLACEMENT LOCATIONS AND PHASES WITH DBKO DESIGN•BUILD. SEE SHEET S2.2 FOR CONTROL JOINT LAYOUT. SUBMIT ALTERNATE LAYOUTS FOR APPROVAL.
3. FOR SLAB-ON-GRADE SUBGRADE PREPARATION, SEE DETAIL 1 S3.0
4. HP# - DENOTES HAIRPIN PER SCHED. SEE 6 S3.0
5. FX — DENOTES FOOTING PER SCHED.
   DX — DENOTES ANCHOR BOLT SIZE AND CONFIGURATION PER PEMB DRWGS. AND EMBEDMENT PER FTG. SCHED. THIS SHEET AND APPLICABLE DETAILS

   USE F1554, GR. 36 THREADED RODS W/ HEAVY HEX NUTS AND WASHERS AS SHOWN IN DETAILS.
6. AT DOOR JAMB ANCHORS, PROVIDE 1/2"Ø KWIK BOLT TZ ANCHORS PER ICC ESR-1917 W/ MIN. HOLE DEPTH OF 2-5/8" (1/2"Ø DRILL BIT).
7. -X' - Y" TOF ELEV. THIS SIDE OF LINE; -X' - Y" TOF ELEV. THIS SIDE OF LINE — DENOTES STEP FOOTING PER 5 S3.0
8. PROVIDE MIN. 15 MIL VAPOR BARRIER BETWEEN GRIDS A AND B FOR THE FULL LENGTH OF THE BUILDING.

2019CBC
City of Madera
Building Department
The approval of these plans does not prevent the City of Madera from requiring correction of errors or omissions in the plans, specifications, construction, or operations and violations of codes and ordinances.
Subject to field inspection and approval.
APPROVED
By:
Date: MAR 03 2022

FOOTING SCHEDULE

MARK	QUANTITY	WIDTH	LENGTH	THICKNESS	TOP OF FTG. ELEV.*	BOT. OF FTG. ELEV*	REINFORCEMENT	MIN. ANCHOR EMBED.
F3A	3	3' - 0"	3' - 0"	18"	-8"	-2' - 2"	(3) #4 EA. WAY TOP (4) #5 EA. WAY (BOT.)	8"
F3B	2	3' - 0"	3' - 0"	16"	-3' - 0"	-4' - 4"	(3) #4 EA. WAY TOP (4) #5 EA. WAY (BOT.)	24"
F3C	2	3' - 0"	3' - 0"	16"	-5' - 0"	-6' - 4"	CONT. RETAINING WALL REINF.	24"
F4A	27	4' - 0"	4' - 0"	18"	-8"	-2' - 2"	(3) #4 EA. WAY TOP (5) #5 EA. WAY (BOT.)	8"
F5A	8	5' - 0"	5' - 0"	18"	-8"	-2' - 2"	(3) #4 EA. WAY (TOP) (6) #5 EA. WAY (BOT.)	12"

*NOTE - FOOTING ELEVATIONS RELATIVE TO FIN. FLR. = 0' - 0" (EL. 258.30 PER CIVIL)

DBKO DESIGN - BUILD
WHSE PARTNERS

DATE	REVISION	BY
11/17/2021	2 PLAN CHECK RESPONSE	

ANY INFORMATION OR DATA ON THIS DRAWING IS NOT INTENDED TO BE SUITABLE FOR REUSE BY ANY PERSON, FIRM, OR CORPORATION ON ANOTHER PROJECT OR ADDITIONS TO THIS PROJECT BY THE ORIGINAL ARCHITECT OR ENGINEER. ANY REUSE WITHOUT WRITTEN VERIFICATION AND ADAPTATION BY THE ENGINEER FOR THE SPECIFIC PURPOSE INTENDED WILL BE AT THE USER'S SOLE RISK AND WITHOUT LIABILITY OR LEGAL EXPOSURE TO THE ENGINEER.

SEAL
REGISTERED PROFESSIONAL ENGINEER ROBERT A. YAMACOO S5607 STRUCTURAL STATE OF CALIFORNIA
11/17/2021

FOUNDATION PLAN
LEASE FLEX. / WAREHOUSE BUILDINGS
FOR
MADERA INDUSTRIAL WHSE, LLC
S. SCHNOOR AVENUE, MADERA, CA

JOB NUMBER 21107
DESIGNED BY RT
DRAWN BY LM
DATE 9/17/2021
SHEET NUMBER S2.0C

G:\Shared drives\DBKOmpany\PROJECTS\21016_WHSE-Madera-Fresno, CA\Plans, Cales & Specs\Arch-Struct (DBKO)\Drawings\Fresno Property - Master\WHSE-BLDG_2021-09-13.rvt
11/22/2021 3:39:30 PM

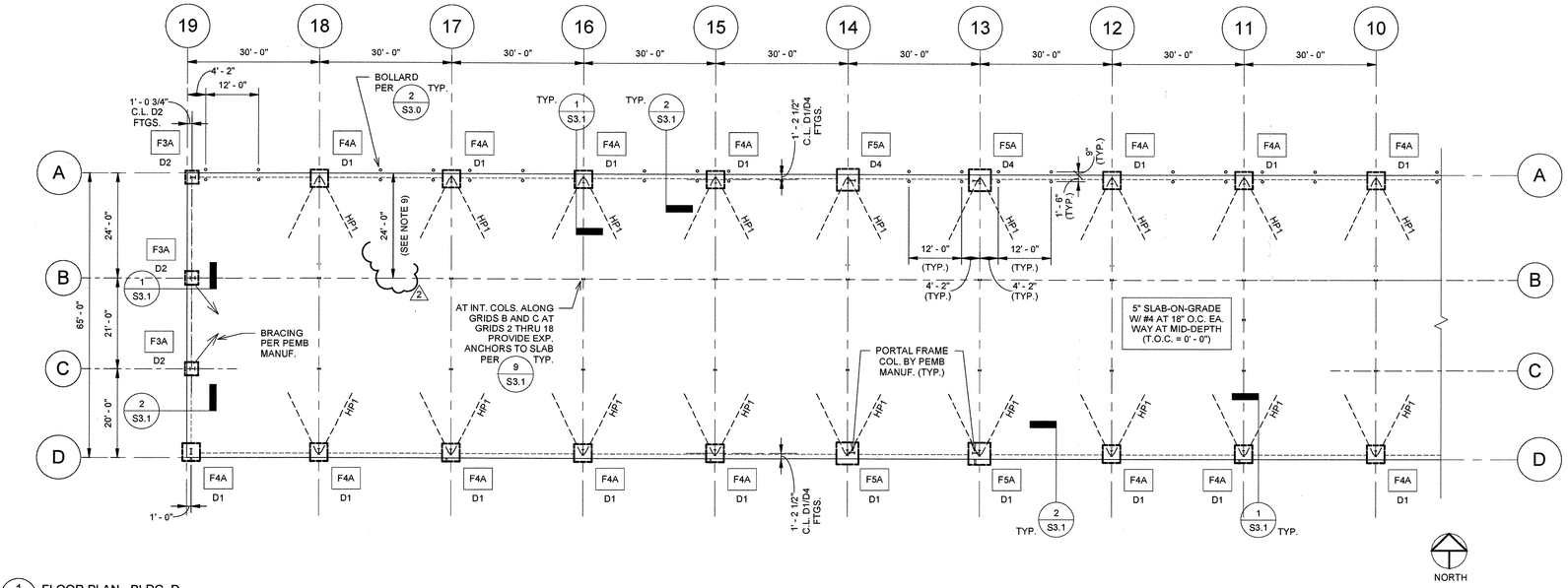

1 S2.0D FLOOR PLAN - BLDG. D
1/16" = 1'-0"

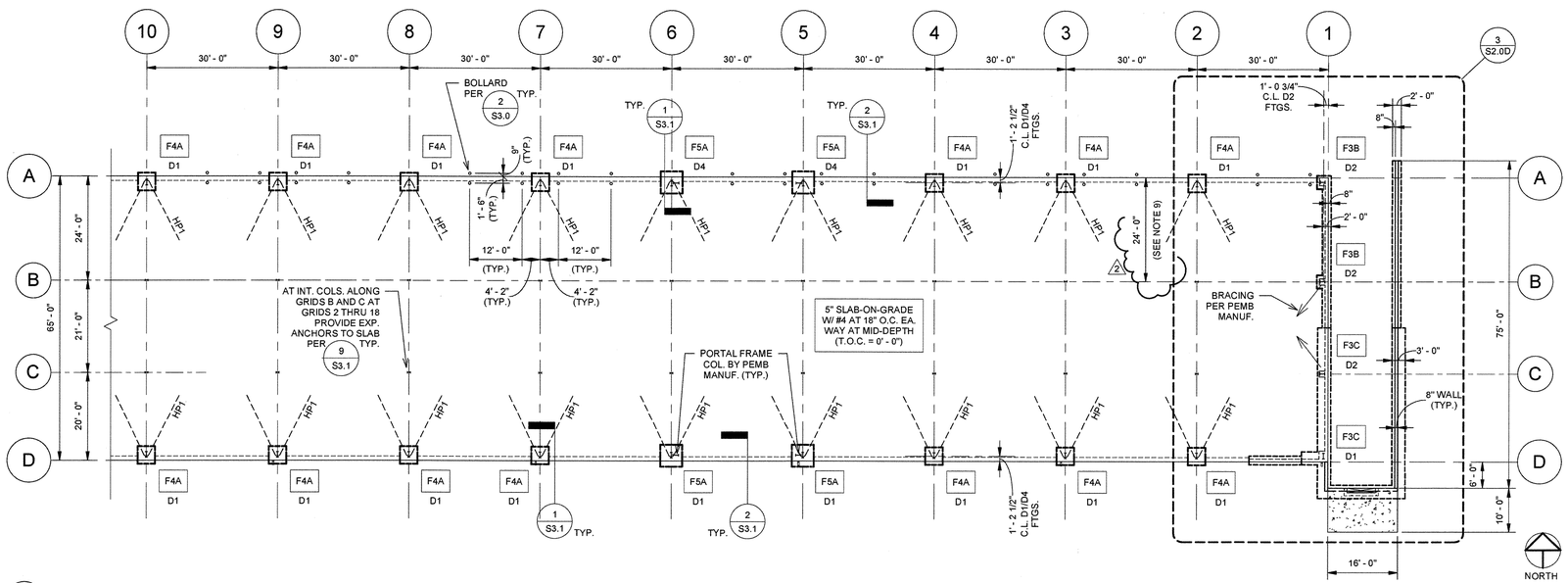

2 S2.0D FLOOR PLAN - BLDG. D
1/16" = 1'-0"

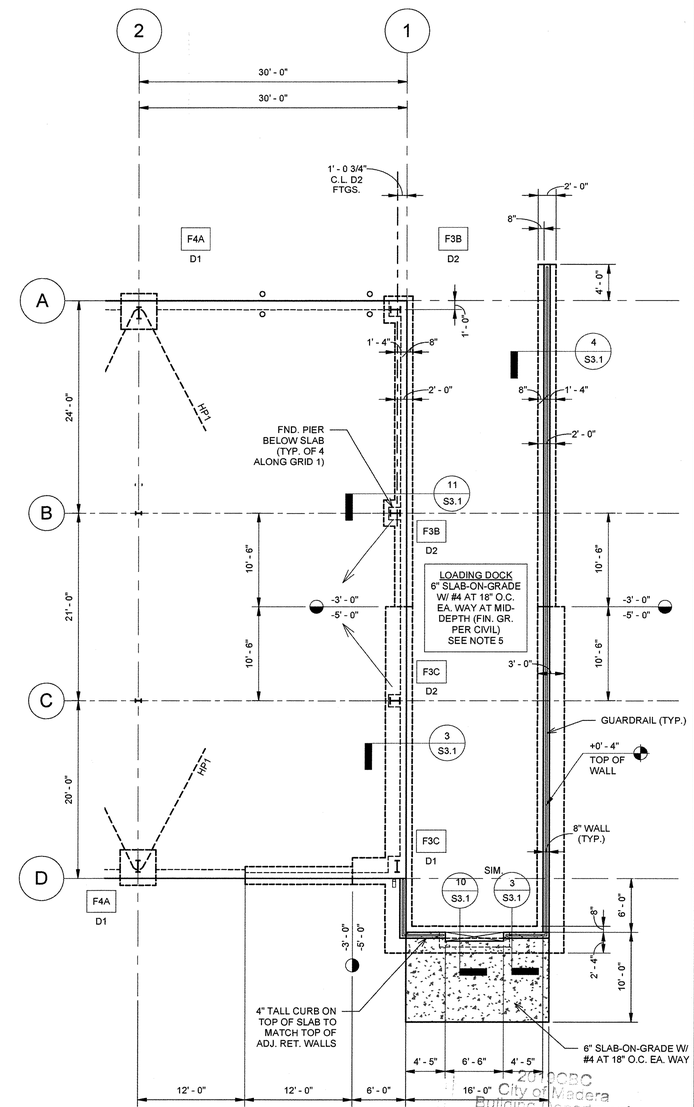

3 S2.0D PARTIAL FND PLAN AT LOADING DOCK
1/8" = 1'-0"

2019 CBC
City of Madera
Building Department
This approval of these plans does not prevent the City of Madera from requiring correction of errors on these plans, violations of ordinances and specifications and violations of state laws and regulations.
APPROVED
By:
Date: MAR 03 2022

FOUNDATION PLAN NOTES:

1. FIELD VERIFY ALL DIMENSIONS WITH EXISTING BEFORE STARTING CONSTRUCTION.
2. COORDINATE SLAB PLACEMENT LOCATIONS AND PHASES WITH DBKO DESIGN+BUILD. SEE SHEET S2.2 FOR CONTROL JOINT LAYOUT. SUBMIT ALTERNATE LAYOUTS FOR APPROVAL.
3. FOR SLAB-ON-GRADE SUBGRADE PREPARATION, SEE DETAIL 1/S3.1
4. HP# - DENOTES HAIRPIN PER SCHED. SEE 6/S3.0
5. AT LOADING DOCK, PROVIDE CONTROL JOINTS AT 10' MAX. SPACING W/ 1-1/2" DEPTH SAW-CUTS. PROVIDE DBKO WITH SEPARATE PRICE TO CAULK JOINTS W/ SIKAFLEX 2C NS OR EQUAL.
6. FX — DENOTES FOOTING PER SCHED.
   DX — DENOTES ANCHOR BOLT SIZE AND CONFIGURATION PER PEMB DRWGS. AND EMBEDMENT PER FTG. SCHED. THIS SHEET AND APPLICABLE DETAILS
   USE F1554, GR. 36 THREADED RODS W/ HEAVY HEX NUTS AND WASHERS AS SHOWN IN DETAILS.
7. AT DOOR JAMB ANCHORS, PROVIDE 1/2"Ø KWIK BOLT TZ ANCHORS PER ICC ESR-1917 W/ MIN. HOLE DEPTH OF 2-5/8" (1/2"Ø DRILL BIT).
8. -X' - Y" / -X' - Y" — TOF ELEV. THIS SIDE OF LINE / TOF ELEV. THIS SIDE OF LINE — DENOTES STEP FOOTING PER 5/S3.0
9. PROVIDE MIN. 15 MIL VAPOR BARRIER BETWEEN GRIDS A AND B FOR THE FULL LENGTH OF THE BUILDING. 2

FOOTING SCHEDULE

MARK	QUANTITY	WIDTH	LENGTH	THICKNESS	TOP OF FTG. ELEV.*	BOT. OF FTG. ELEV*	REINFORCEMENT	MIN. ANCHOR EMBED.
F3A	3	3' - 0"	3' - 0"	18"	-8"	-2' - 2"	(3) #4 EA. WAY TOP (4) #5 EA. WAY (BOT.)	8"
F3B	2	3' - 0"	3' - 0"	16"	-3' - 0"	-4' - 4"	(3) #4 EA. WAY (TOP) (4) #5 EA. WAY (BOT.)	24"
F3C	2	3' - 0"	3' - 0"	16"	-5' - 0"	-6' - 4"	CONT. RETAINING WALL REINF.	24"
F4A	27	4' - 0"	4' - 0"	18"	-8"	-2' - 2"	(3) #4 EA. WAY TOP (5) #5 EA. WAY (BOT.)	8"
F5A	8	5' - 0"	5' - 0"	18"	-8"	-2' - 2"	(4) #4 EA. WAY (TOP) (6) #5 EA. WAY (BOT.)	12"

*NOTE - FOOTING ELEVATIONS RELATIVE TO FIN. FLR. = 0' - 0" (EL. 258.30 PER CIVIL)

DBKO DESIGN+BUILD
WHSE PARTNERS

DATE	REVISION	BY
11/17/2021	2 PLAN CHECK RESPONSE	

ANY INFORMATION OR DATA ON THIS DRAWING IS NOT INTENDED TO BE SUITABLE FOR REUSE BY ANY PERSON, FIRM OR CORPORATION FOR ANY PURPOSE OTHER THAN THE SPECIFIC PROJECT FOR WHICH IT WAS PREPARED. ANY REUSE WITHOUT WRITTEN VERIFICATION AND ADAPTATION BY THE ENGINEER FOR THE SPECIFIC PURPOSE INTENDED WILL BE AT THE USER'S SOLE RISK AND WITHOUT LIABILITY OR LEGAL EXPOSURE TO THE ENGINEER.

SEAL: REGISTERED PROFESSIONAL ENGINEER ROBERT A. YAMACOO S5607 STRUCTURAL STATE OF CALIFORNIA 11/17/2021

FOUNDATION PLAN

LEASE FLEX. / WAREHOUSE BUILDINGS
FOR
MADERA INDUSTRIAL WHSE, LLC
S. SCHNOOR AVENUE, MADERA, CA

JOB NUMBER: 21107
DESIGNED BY: RT
DRAWN BY: LM
DATE: 9/17/2021
SHEET NUMBER: S2.0D

G:\Shared drives\DBKO\Company\PROJECTS\21107_WHSE Partners-Fresno, CA\Plans, Calcs & Specs\Arch\Sheet (DBKO)\Drawings\Fresno Property - Materials\WHSE-BLDG\D_2021-10-12.rvt
11/02/2021 3:26:44 PM

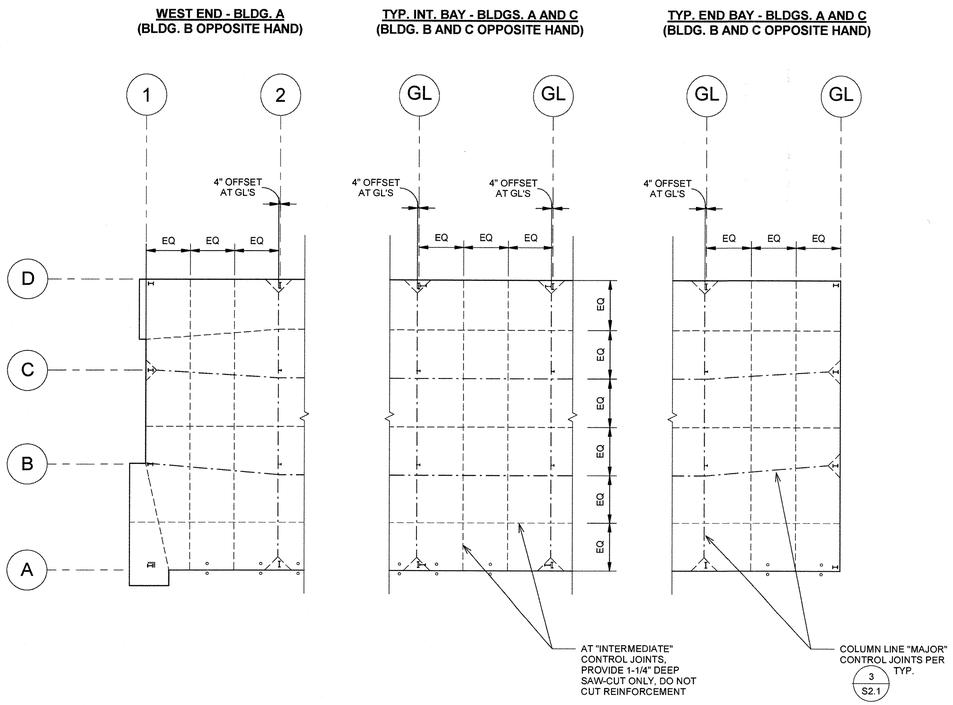

1/S2.1 TYP. CONTROL JOINT PLAN (BLDG A SHOWN - B, C, D SIM.)
1/16" = 1'-0"

CONTROL JOINT PLAN NOTES:

1. SAWCUT JOINTS WITHIN 12 HOURS OF CONCRETE PLACEMENT (AVOID SPALLING).
2. DO NOT PLACE CONCRETE WHEN AMBIENT TEMPERATURE EXCEEDS 90°F OR WINDS GREATER THAN 20 MPH PRESENT.
3. SLAB CURING PER GENERAL NOTES.
4. CONSTRUCTION AND CONTROL JOINTS PER DETAILS THIS SHEET.

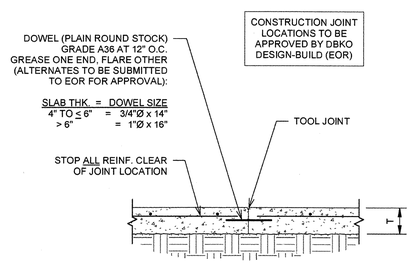

2/S2.1 CONSTRUCTION JOINT DETAILS (AT CONTRACTOR'S OPTION)
3/4" = 1'-0"

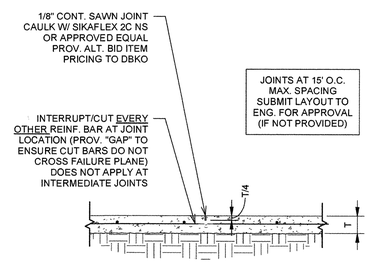

3/S2.1 INTERMEDIATE CONTROL JOINTS (SAW-CUT)
3/4" = 1'-0"

2019CBC
City of Madera
Building Department
The approval of these plans does not prevent the City of Madera from requiring the correction of errors or omissions in the plans, specifications or construction. Subject to field inspections and approval. Codes and ordinances.
APPROVED
By:
Date: MAR 03 2022

DBKO DESIGN-BUILD
LIC#1032283

WHSE PARTNERS

DATE	REVISION	BY

ANY INFORMATION OR DATA ON THIS DRAWING IS NOT INTENDED TO BE SUITABLE FOR REUSE BY ANY PERSON, FIRM OR CORPORATION, OR FOR ANY OTHER PROJECT OTHER THAN THE SPECIFIC PROJECT. ANY REUSE WITHOUT WRITTEN VERIFICATION AND ADAPTATION BY THE ENGINEER FOR THE SPECIFIC PURPOSE INTENDED WILL BE AT THE USER'S SOLE RISK AND WITHOUT LIABILITY OR LEGAL EXPOSURE TO THE ENGINEER.

SEAL
REGISTERED PROFESSIONAL ENGINEER
ROBERT A. YAMACOO
S5607
STRUCTURAL
STATE OF CALIFORNIA
11/17/2021

CONTROL JOINT PLAN

LEASE FLEX. / WAREHOUSE BUILDINGS
FOR
MADERA INDUSTRIAL WHSE, LLC
S. SCHNOOR AVENUE, MADERA, CA

JOB NUMBER	21107
DESIGNED BY	RT
DRAWN BY	LM
DATE	9/17/2021
SHEET NUMBER	S2.1

G:\Shared drives\DBKO\Company\PROJECTS\2019_WHSE Partners-Fresno, CA\Plans, Calcs & Specs\Arch-Struct (DBKO)\Drawings\Fresno Property - Materials\WHSE-BLDG\A_2021-09-13.rvt
11/22/2021 3:09:44 PM

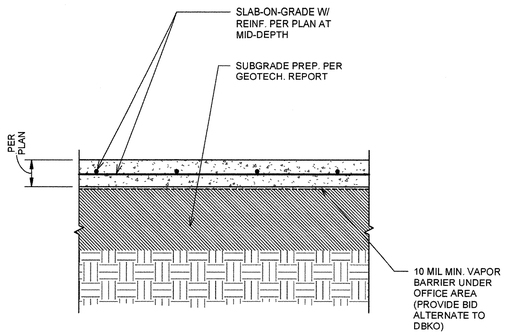

1 S3.0 TYPICAL SLAB SUBGRADE SECTION
3/4" = 1'-0"

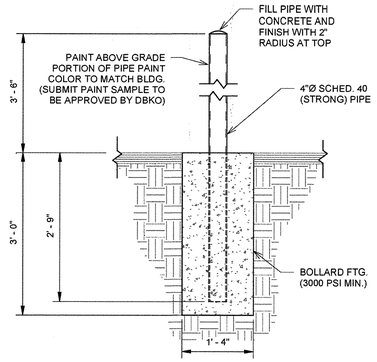

2 S3.0 TYP. PIPE BOLLARD DETAIL
3/4" = 1'-0"

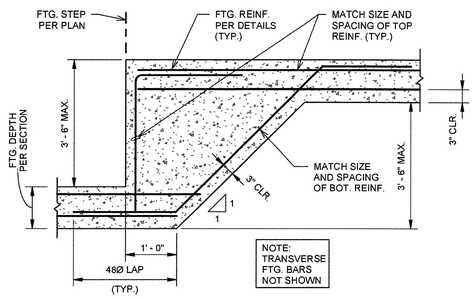

5 S3.0 TYPICAL STEP FOOTING DETAIL
1/2" = 1'-0"

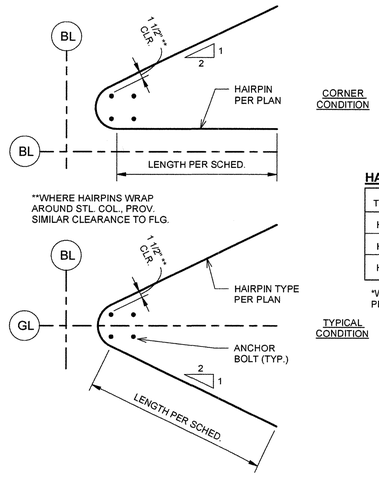

6 S3.0 HAIRPIN DETAIL
3/4" = 1'-0"

HAIRPIN SCHEDULE

TYPE	QUANTITY*	LENGTH
HP1	(1) #4	10' - 0"
HP2	(2) #5	15' - 0"
HP3	(2) #6	15' - 0"

*WHERE QUANTITY GREATER THAN 1, PROV. 1-1/2" VERT CLR. B/T ROWS.

f'c, PSI (2)	LOCATION (4)	CASE (5)	CLASS B SPLICE LENGTH, IN.								
			#3	#4	#5	#6	#7	#8	#9	#10	#11
3,000	TOP	1	28	37	47	56	81	93	105	118	131
		2	42	56	70	84	122	139	157	177	196
	OTHER	1	22	29	36	43	63	72	81	91	101
		2	32	43	54	64	94	107	121	136	151
4,000	TOP	1	24	32	40	48	70	80	91	102	113
		2	36	48	60	72	106	121	136	153	170
	OTHER	1	19	25	31	37	54	62	70	73	87
		2	28	37	47	56	81	93	105	118	131
5,000	TOP	1	22	29	36	43	63	72	81	91	101
		2	33	43	54	65	94	108	122	137	152
	OTHER	1	17	22	28	33	49	55	63	70	78
		2	25	33	42	50	73	83	94	105	117
6,000	TOP	1	20	26	33	40	58	66	74	83	93
		2	30	40	49	59	86	98	111	125	139
	OTHER	1	15	20	25	31	44	51	57	64	71
		2	23	31	38	46	66	76	85	96	107

NOTES:

1. WHERE SMALLER DIAMETER BARS LAP WITH LARGER DIAMETER BARS, USE LAP LENGTH FOR LARGER DIAMETER BAR.
2. "f'c" VALUES IN THIS TABLE DENOTE DESIGN STRENGTH FOR NORMAL WEIGHT CONCRETE ONLY.
3. TABULATED VALUES ARE FOR GRADE 60 REINFORCEMENT. FOR HIGHER GRADE REINFORCEMENT, CONSULT EOR.
4. TOP BARS DENOTE HORIZONTAL BARS PLACED SO THAT 12" OF CONCRETE OR MORE IS CAST BELOW (I.E. - BEAM TOP BARS OR WALL REINFORCEMENT).
5. CASES 1 AND 2, PER STRUCTURAL MEMBER TYPE, CONCRETE COVER, AND BAR SPACING (CENTER-TO-CENTER) AS DEFINED BELOW:

CASE 1	CONC. COVER ≥ 1.0db	AND	SPA. ≥ 3.0db
CASE 2	CONC. COVER < 1.0db	OR	SPA.< 3.0db

6. FOR LIGHTWEIGHT AGGREGATE CONCRETE, MULTIPLY TABULATED VALUES BY 1.33.
7. FOR EPOXY COATED BARS, MULTIPLY TABULATED VALUES BY 1.3 FOR "TOP BARS" AND 1.5 FOR "OTHERS".

7 S3.0 CONCRETE REINFORCEMENT BAR LAP SCHEDULE
3/4" = 1'-0"

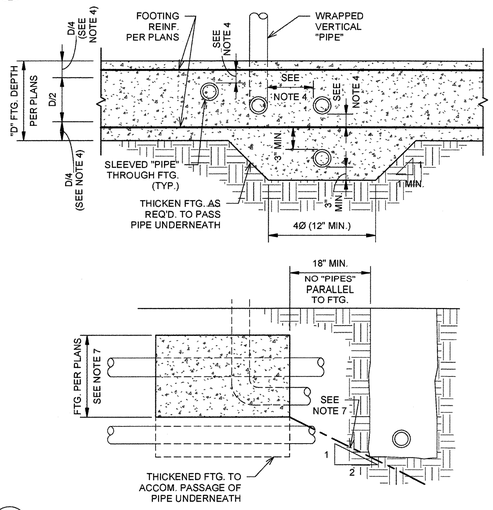

9 S3.0 TYPICAL PIPE/CONDUIT AT FOOTING DETAIL
3/4" = 1'-0"

PIPE THRU FOOTING NOTES:

1. PROVIDE FLEXIBLE COUPLINGS AT ENTRY/EXIT POINTS AT ALL PIPES EMBEDDED IN CONCRETE.
2. NO PIPE IS PERMITED TO RUN PARALLEL IN FOOTINGS, STEMS, OR CURBS.
3. ALL PIPES TO USE PVC SLEEVES WITH AN INSIDE DIAMETER 2" LARGER THAN PIPE OUTSIDE DIAMETER. IN LIEU OF SLEEVE, PIPES MAY BE WRAPPED WITH 1/4" FOAM SHEETS, 4 LAYERS MINIMUM.
4. ALL PIPES THROUGH FOOTINGS TO BE WRAPPED OR SLEEVED. MAINTAIN 1.5" MINIMUM CLEARANCE BETWEEN WRAPS/SLEEVES AND CONCRETE REINFORCEMENT. MAINTAIN 3" MINIMUM CONCRETE COVER AROUND WRAPS/SLEEVES. NO PIPES SHALL BE PLACED WITHIN D/4 AT FOOTING TOP AND BOTTOM. ALL RIGID CONDUIT (RISERS) SHALL BE WRAPPED WITH A MINIMUM OF 20 MIL TAPE.
5. MINIMUM CLEARANCE BETWEEN "PIPES" TO BE TWO TIMES THE LARGER PIPE DIAMETER (6" MINIMUM).
6. NO HORIZONTAL PIPES ALLOWED WITHIN 2'-0" OF EACH SIDE OF STEEL COLUMNS OR HOLDOWNS TO AVOID COMPRESSION/TENSION ZONES. NO VERTICAL PIPES ALLOWED IN SHEAR WALLS OR BRACED FRAMES.
7. PIPES PLACED PARALLEL TO FOOTINGS IN BACKFILLED TRENCHES SHALL BE PLACED ABOVE THE 1:2 SLOPED LINE SHOWN IN THE SECTION.
8. NO SLEEVES OR WRAPPED PIPE GREATER THAN 8" IN DIAMETER SHALL BE PLACED THROUGH THE FOOTING. USE THICKENED FOOTING AS SHOWN FOR LARGER PIPES.
9. ALL OTHER CONFIGURATIONS/CONDITIONS ENCOUNTERED IN THE FIELD MUST BE BROUGHT TO THE THE ATTENTION OF THE STRUCTURAL ENGINEER FOR FURTHER REVIEW.

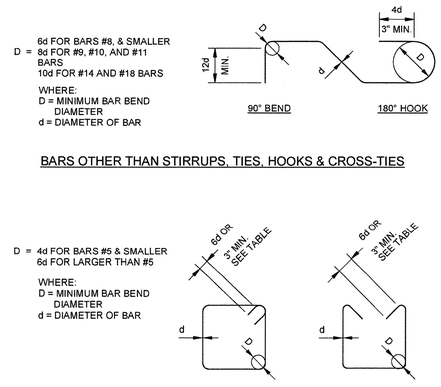

11 S3.0 REINFORCEMENT BAR BEND SCHEDULE
3/4" = 1'-0"

MIN. BAR DIAMETER "D" AND STANDARD HOOK EXTENSION "L" IN INCHES

	BAR SIZE	"D"	180° "L"	135° "L"	90° "L"
BARS OTHER THAN STIRRUPS, TIES, HOOPS AND CROSS-TIES	#3	2 1/4	3 MIN.	-	4 1/2
	#4	3	3 MIN.	-	6
	#5	3 3/4	3 MIN.	-	7 1/2
	#6	4 1/2	3	-	9
	#7	5 1/4	3 1/2	-	10 1/2
	#8	6	4	-	12
	#9	9	4 1/2	-	13 1/2
	#10	10	5	-	15
	#11	11	5 1/2	-	16 1/2
	#14	17 1/2	7	-	21
	#18	22 1/2	9	-	27
STIRRUPS, TIES, HOOPS, AND CROSS-TIES	#3	1 1/2	-	3 MIN.	3 MIN.
	#4	2	-	3	3
	#5	2 1/2	-	3 3/4	3 3/4
	#6	4 1/2	-	4 1/2	9
	#7	5 1/4	-	5 1/4	10 1/2
	#8	6	-	6	12

2019CBC
City of Madera
Building Department
The approval of these plans does not prevent the City of Madera from requiring correction of errors or omissions in the plans, specifications or construction. Subject to field inspections and approval of laws, Codes and ordinances.
2019CBC 2019CBC
APPROVED
By:
Date: MAR 03 2022

DBKO DESIGN-BUILD
UCR100203
WHSE PARTNERS

DATE	REVISION	BY

ANY INFORMATION OR DATA ON THIS DRAWING IS NOT INTENDED TO BE SUITABLE FOR REUSE BY ANY PERSON, FIRM OR CORPORATION FOR ANY PURPOSE OTHER THAN THE SPECIFIC PROJECT FOR WHICH IT WAS PREPARED. ANY REUSE WITHOUT WRITTEN VERIFICATION AND ADAPTATION BY THE ENGINEER FOR THE SPECIFIC PURPOSE INTENDED WILL BE AT THE USER'S SOLE RISK AND WITHOUT LIABILITY OR LEGAL EXPOSURE TO THE ENGINEER.

SEAL
REGISTERED PROFESSIONAL ENGINEER
ROBERT A. YAMACIO
S5607
STRUCTURAL
STATE OF CALIFORNIA
11/17/2021

SECTIONS AND DETAILS

LEASE FLEX. / WAREHOUSE BUILDINGS
FOR
MADERA INDUSTRIAL WHSE, LLC
S. SCHNOOR AVENUE, MADERA, CA

JOB NUMBER	21107
DESIGNED BY	RT
DRAWN BY	LM
DATE	9/17/2021
SHEET NUMBER	S3.0

G:\Shared drives\DBKO\Company\PROJECTS\2016_WHSE Partners-Fresno, CA\Plans, Codes & Specs\Arch-Struct (DBKO)\Drawings\Fresno Property - Madera\WHSE-BLDG\A_2021-09-13.rvt
11/22/2021 2:49:47 PM

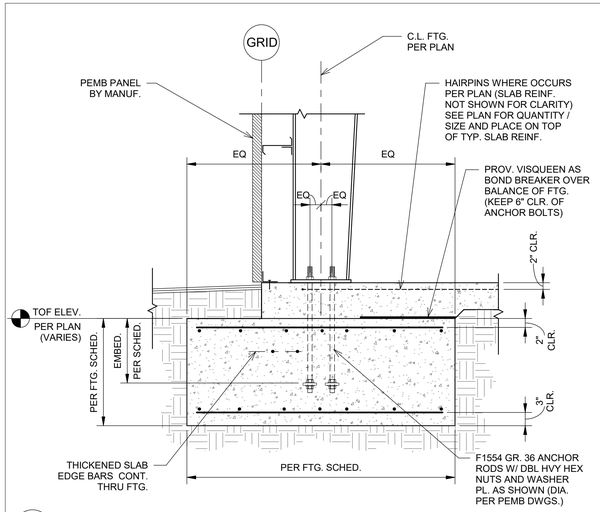

1 S3.1 TYP. EXT. FOOTING SECTION
3/4" = 1'-0"

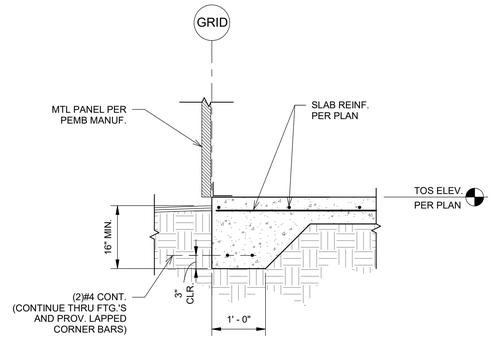

2 S3.1 TYPICAL THICKENED SLAB EDGE
3/4" = 1'-0"

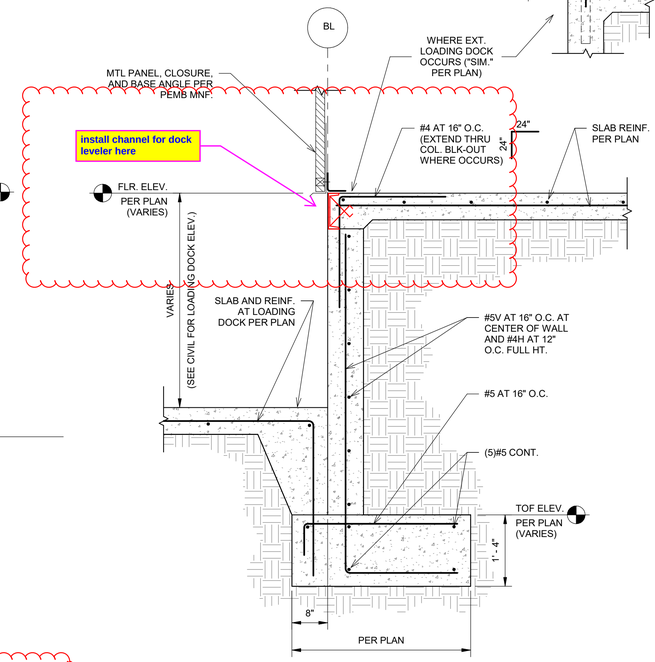

3 S3.1 TYP. FND. WALL ADJACENT TO LOADING DOCK
3/4" = 1'-0"

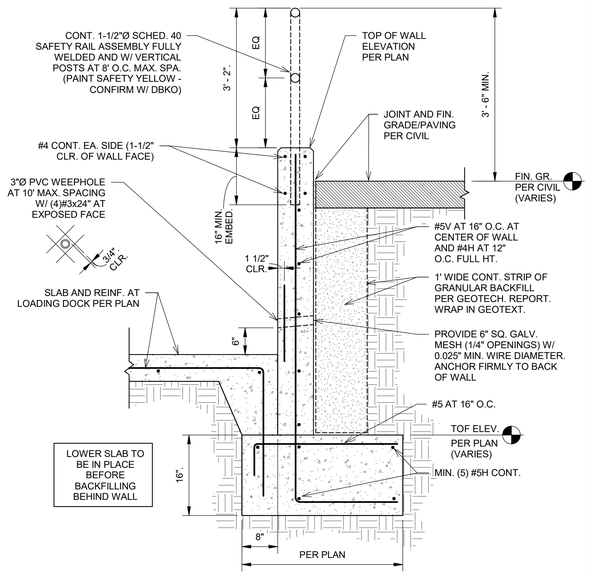

4 S3.1 TYPICAL DOCK RETAINING WALL SECTION
3/4" = 1'-0"

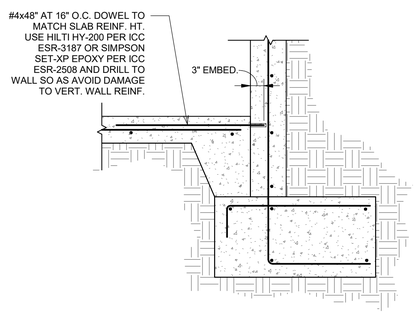

SLAB REINFORCEMENT ALTERNATE AT DOCK RAMP FOR DETAILS
3 / S3.1 AND 11 / S3.1
10 / S3.1 AND 4 / S3.1

5 S3.1 DOCK SLAB REINFORCEMENT DETAIL (ALTERNATE)
3/4" = 1'-0"

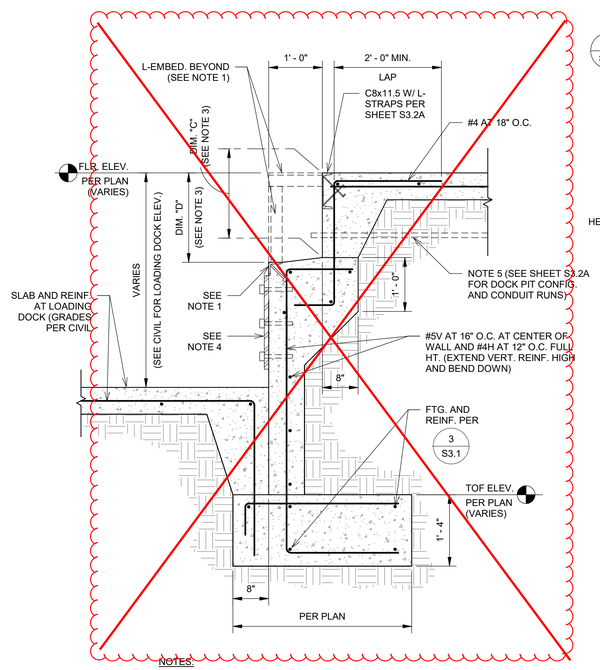

NOTES:

1. PROVIDE L3x3x1/4 EMBED AROUND ALL PIT EDGES AS SHOWN WITH 1/2"Øx5" WHS AT 12" O.C. AND 2" FROM ENDS.
2. VERIFY PIT AND EMBED. LAYOUT W/ DOCK LEVELER MANUF. PRIOR TO CONC. PLACEMENT AND EMBED. FABRICATION (SEE SHEET S3.3A).
3. SLOPE PIT BOT. PER MFR. DIMENSION "D" = 25", "C" = 24".
4. SURFACE MOUNTED DOCK RESTRAINT PLATE PER DOCK EQUIPMENT SUPPLIER/MANF.
5. CONDUIT PER DOCK LEVELER SUPPLIER (SEE SHEET S3.2A).

10 S3.1 LEVELING PIT SECTION AT LOADING DOCK
3/4" = 1'-0"

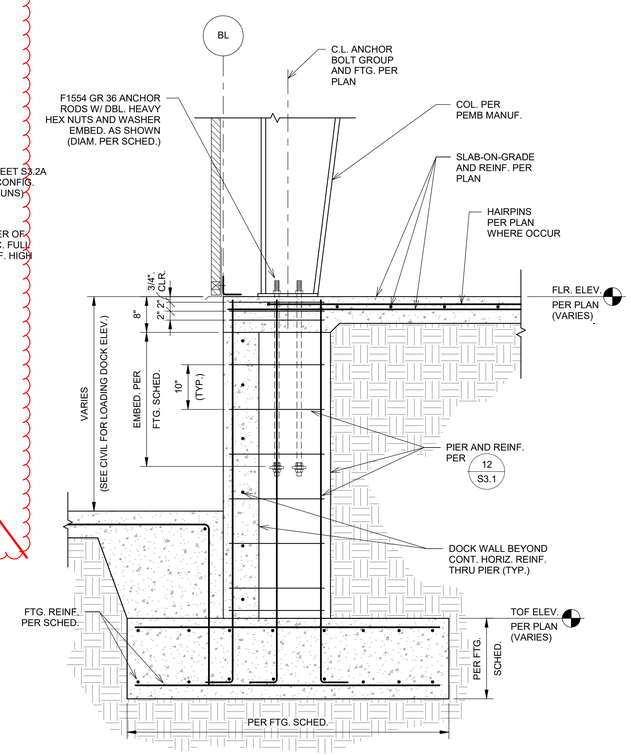

11 S3.1 TYP. COL. PIER AT LOADING DOCK WALL
3/4" = 1'-0"

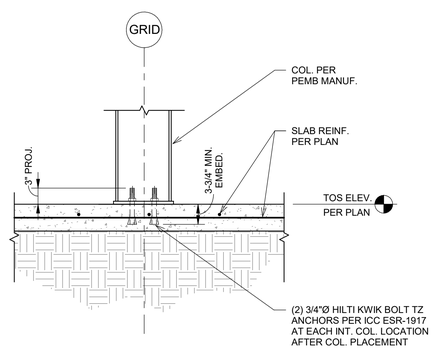

9 S3.1 ANCHORAGE DETAIL AT INTERNAL PARTITION WALL COLUMNS
3/4" = 1'-0"

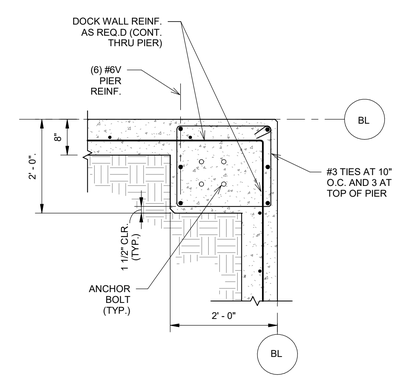

CORNER PIER CONDITION

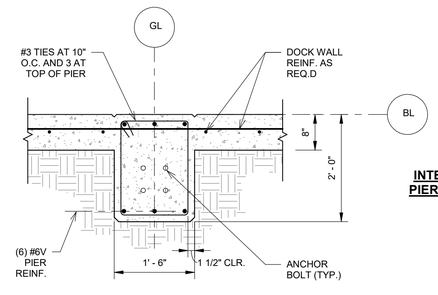

INTERMEDIATE PIER CONDITION

12 S3.1 PLAN VIEWS AT PIERS
3/4" = 1'-0"

DBKO DESIGN+BUILD
LIC#1032283

WHSE PARTNERS

DATE	REVISION	BY

ANY INFORMATION OR DATA ON THIS DRAWING IS NOT INTRINSIC TO BE SUITABLE FOR REUSE BY ANY PERSON, FIRM, CORPORATION, OR ANY OTHERS ON EXTENSIONS OF THIS PROJECT OR FOR ANY USE ON ANY OTHER PROJECT. ANY REUSE WITHOUT WRITTEN VERIFICATION AND ADAPTATION BY THE ENGINEER FOR THE SPECIFIC PURPOSE INTENDED WILL BE AT THE USER'S SOLE RISK AND WITHOUT LIABILITY OR LEGAL EXPOSURE TO THE ENGINEER.

SEAL
REGISTERED PROFESSIONAL ENGINEER
ROBERT A. TAMACCIO
S5607
STRUCTURAL
STATE OF CALIFORNIA
11/11/2021

FOUNDATION DETAILS

LEASE FLEX. / WAREHOUSE BUILDINGS
FOR
MADERA INDUSTRIAL WHSE, LLC
S. SCHNOOR AVENUE, MADERA, CA

JOB NUMBER	21107
DESIGNED BY	RT
DRAWN BY	LM
DATE	9/17/2021
SHEET NUMBER	S3.1

G:\Shared drives\DBKOInpany\PROJECTS\20106_WHSE Partners-Fresno, CA\Plans, Calcs & Specs\Arch-Struct (DBKO)\Drawings\Franco Property - Masters\WHSE-BLDG\A_2021-09-12.rvt
11/22/2021 2:59:49 PM

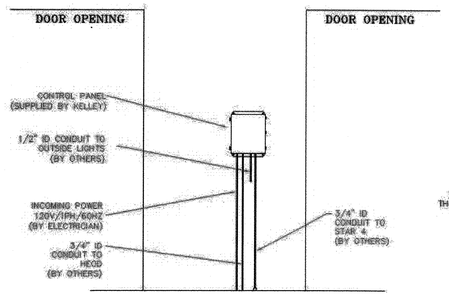

VIEW D TYPICAL CONTROL INSTALLATION

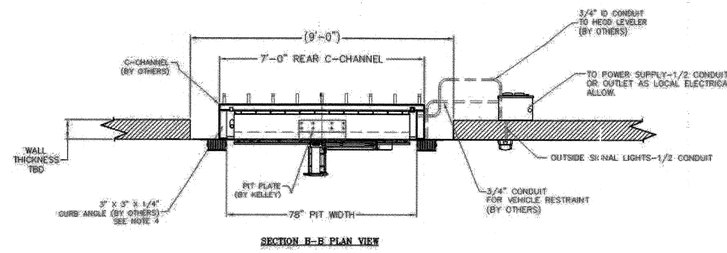

SECTION B-B PLAN VIEW

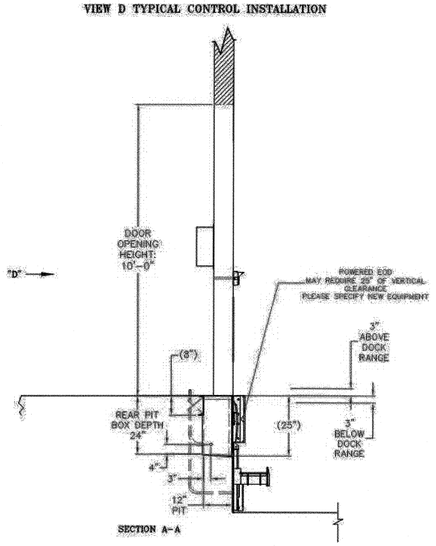

SECTION A-A

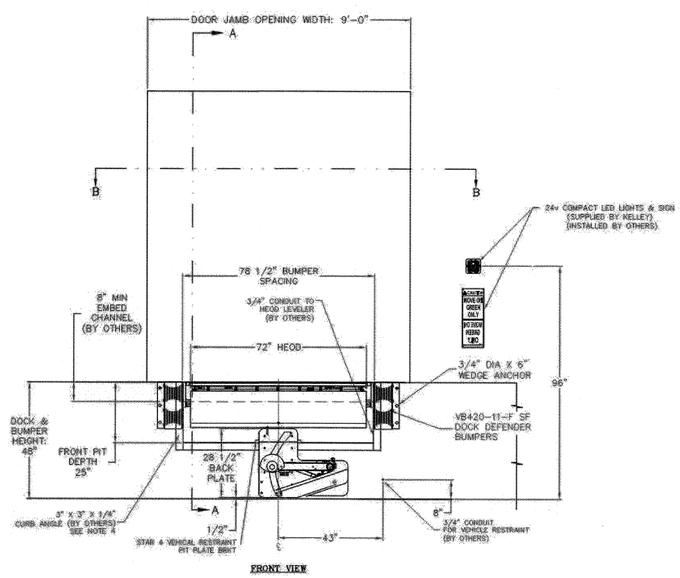

FRONT VIEW

Revision	Date	Reference	Description	Revision	Date	Reference	Description
-	-	-	-				

General Notes

The information contained herein is property and confidential to Extrematic, and is to be used solely for the express purpose of consideration and development of the article described herein and may not be reproduced or disseminated without the permission of Extrematic. Extrematic reserves the right to incorporate product improvements without prior notice.

NOTES:

1) DOOR JAMB THICKNESS, DOOR OPEN WIDTH AND ANY PROTRUSION OF SIGNAG MATERIAL BEYOND FOUNDATION WALL MUST BE CONFIRMED BEFORE JOB CAN BE APPROVED.

2) PIT CONSTRUCTION MUST BE SURVEYED AND PROPERLY CONSTRUCTED PER THE DOOR INSTALLATION.

3) PIT DIMENSIONAL TOLERANCES ARE ±1/8 ON SQUIRENESS; DEPTH, WIDTH, AND LENGTH. KELLEY ASSUMES NO LIABILITY FOR DEVIATIONS BEYOND THIS TOLERANCE.

4) ALL PIT CURB ANGLES TO HAVE MINIMUM #1/2" X 6" LONG CONCRETE ANCHORS, LOCATED 45° TO ANGLE SURFACES AND WELDED ON 12" CENTERS.

5) BACK CHANNEL ASSEMBLY TO BE PLUMB WITHIN 1/16" AND PARALLEL TO FRONT CURB ANGLE WITHIN 1/8" (VERTICAL LEVELERS ONLY)

6) CENTERLINE OF BACK CHANNEL ASSEMBLY AND CENTERLINE OF DOOR OPENING TO BE WITHIN 1/8" (VERTICAL LEVELERS ONLY)

7) ***

8) ELECTRICAL CONTRACTOR MUST ENSURE THAT ALL ELECTRICAL CONDUIT AND WIRING MEETS LOCAL ELECTRICAL CODES.

9) ALL CONDUIT SIZES ARE MINIMUM.

10) ALL CONDUIT SHOWN FOR REFERENCE ONLY.

11) GENERAL CONTRACTOR SHALL ENSURE EQUIPMENT INSTALLATION MEETS ALL APPLICABLE BUILDING CODES.

12) DO NOT PLACE BOLLARDS OR OTHER EQUIPMENT IN EQUIPMENT EXCLUSION AREA OF VSL'S.

Special Site Notes

*** BUMPER MOUNTING SURFACE AREA MUST BE FLAT, UNIFORM & SMOOTH. ***

*** BUMPER MOUNTING ANCHOR LOCATIONS MUST BE A MINIMUM OF 4-1/2" FROM ANY EDGE AND/OR WALL SEAM. ALL ANCHORS MUST BE 3/4"X 5" (min depth) WEDGE ANCHORS ***

Project Proposal Drawing

For presentation only, not for use as construction detail. Drawing must be signed and returned with corrections and changes made and initialed before a formal approval drawing can be generated and resubmitted for construction approval.

Not for Construction

SPECIFICATIONS

DOCK LEVELER

LEVELER: HEOD 7230
QTY: 16
LIP: 15" Long
VOLTAGE: 120/1ph/60
PAINT FINISH: Green
BUMPERS: VB420-11F – SF Dock Defender
FEATURES: Pit Application
8" Rear Embed By Others

VEHICLE RESTRAINT

MODEL: Star4
QTY: 16
FEATURES: Wall Mounted
120V Power
Pit Plate Brkt
28 1/2" Backplate
24v Compact Lights

DOCK SEAL/SHELTER

MODEL: N/A
QTY:
DOOR SIZE:
OPTIONS:

CONTROL PANEL

To house & interconnect the following:

CONTROL PANEL: HEOD, Star4,
QTY: 16
OPTIONS: Nema 12 Panel

DOCK DOOR

ITEMS:
QTY:

MISC. EQUIPMENT

ITEMS:
QTY:

REVIEW DRAWING
THIS DRAWING IS NOT INTENDED FOR CONSTRUCTION.
PLEASE CONSULT WITH REGISTERED ARCHITECT OR PROFESSIONAL ENGINEER FOR ALL LOADS ANALYSIS AND SPECIFICATIONS CONFORMITY.

Firm Name and Address

KELLEY
1612 Hutton Drive, Suite 140
Carrollton, TX 75006

Project Name and Address:
End User: Toyota Mfg of Texas
Address: San Antonio, TX
Architect:
General Contractor: –
KELLEY Distributor: Miner – San Antonio Texas

Drawn By: JWC	Regional Sale Manager: S Insall
Date: 1/25/21	Drawing Number: 8122A
Scale: NTS	Sheet Number: 1 OF 1

EOD Installation with Recessed Pit

4front ENGINEERED SOLUTIONS

POWERED EOD LEVELERS

1. Use a minimum 12" x 25" pit recess with an additional 3" of clearance per side of leveler. See Fig. 2.
2. Follow the section that addresses your installation and then continue to the **GENERAL INSTALLATION** section in the your User's Manual included with your leveler.

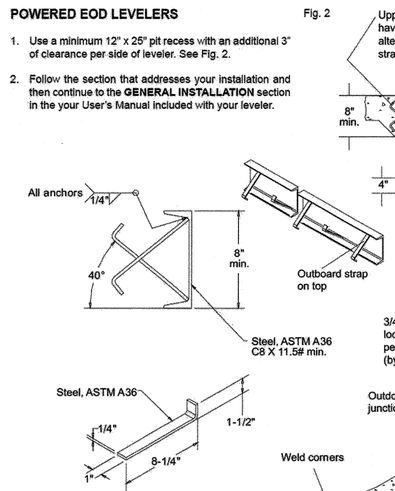

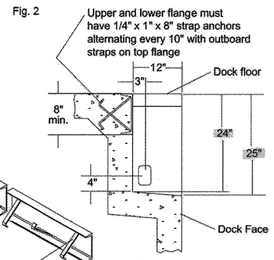

SECTION A-A

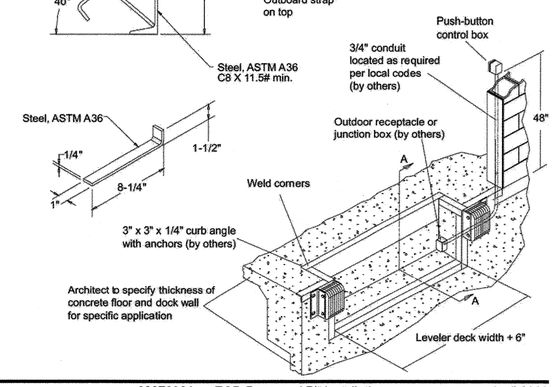

©2009, 4Front Engineered Systems, Inc.

2019CBC
City of Madera
Building Department
The approval of these plans does not prevent the city of Madera from requiring correction of errors or omissions in the plans, specifications or construction. Subject to field inspections and approval of all codes and ordinances.
APPROVED
By:
Date: MAR 03 2022

DBKO DESIGN BUILD
WHSE PARTNERS

BY	REVISION	DATE

ANY INFORMATION OR DATA ON THIS DRAWING IS NOT INTENDED TO BE SUITABLE FOR REUSE BY ANY PERSON, FIRM, OR CORPORATION FOR ANY PURPOSE OTHER THAN THE SPECIFIC PROJECT FOR WHICH IT WAS PREPARED. ANY REUSE WITHOUT WRITTEN VERIFICATION AND ADAPTATION BY THE ENGINEER FOR THE SPECIFIC PURPOSE INTENDED WILL BE AT THE USER'S SOLE RISK AND WITHOUT LIABILITY OR LEGAL EXPOSURE TO THE ENGINEER.

SEAL

REGISTERED PROFESSIONAL ENGINEER ROBERT A. YAMAGUCHI S5607 STRUCTURAL STATE OF CALIFORNIA 11/17/2021

LOADING DOCK DETAILS

LEASE FLEX. / WAREHOUSE BUILDINGS
FOR
MADERA INDUSTRIAL WHSE, LLC
S. SCHNOOR AVENUE, MADERA, CA

JOB NUMBER	21107
DESIGNED BY	RT
DRAWN BY	LM
DATE	9/17/2021
SHEET NUMBER	S3.2

11/22/2021 2:59:51 PM

G:\Shares drives\DBKO\Property\PROJECTS\2019_JWHSE Tri\Wave Fresno, CA\Plans, Calcs & Specs\Arch-Struct (DBKO)\Drawings\Fresno Property - Madera\WHSE-BLDG\A_2021-09-13.rvt

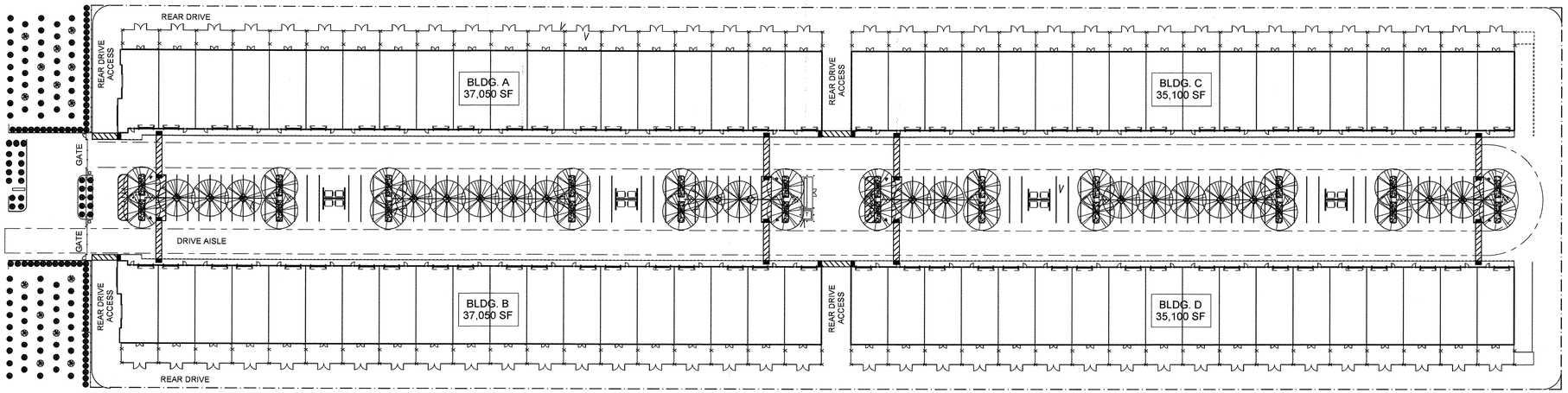

TOTAL OF 74 LEASABLE UNITS AT 1,950 SF = 144,300 SF GROSS BUILDING AREA OVERALL

NORTH

1 / M1 MECHANICAL SITE PLAN
1" = 50'-0"

2019CBC
City of Madera
Building Department
The approval of these plans does not prevent the City of Madera from requiring correction of errors or omissions in the plans, specifications or construction. Subject to field inspections and approval in accordance with Codes and Ordinances.
APPROVED
By:
Date: MAR 03 2022

These plans or drawings or any part of these publications are the exclusive propery of VAR, and may not be reproduced, or transmitted in any form or by means, recording, electronic, mechanical, photocoping or otherwise without written permission by VAR. Copies of these drawings are supplied to the owner or the Building contractor and, otherwise for the use of this project only. Any Re-use of these drawings or documents is prohibited without the written permission of VAR. If VAR is not awarded the project, VAR will not warranty these plans, drawings or contents and will not assume any liability or responsibility for the unauthorized use of these plans or drawings, and the plans or drawings and contents must be returned to VAR immediately.

VAR
Since 1970
825 S Topeka Ave
Fresno CA, 93721
559-237-3188

Air Conditioning & Heating
Custom Sheet Metal
Sales & Service

Signed Steve Mendrin Date 9-9-21
Steve Mendrin
License #689606
Valley Air Conditioning & Repair.

Valley Air Conditioning & Repair, Inc. VAR Since 1970

50 Years of Indoor comfort.

DBKO DESIGN - BUILD
LIC#1032283

DATE	REVISION	BY

ANY INFORMATION OR DATA ON THIS DRAWING IS NOT INTENDED TO BE SUITABLE FOR REUSE BY ANY PERSON, FIRM OR CORPORATION FOR ANY OTHER PROJECT OTHER THAN THE SPECIFIC PROJECT FOR WHICH THE PROJECT. ANY REUSE WITHOUT WRITTEN VERIFICATION AND ADAPTATION BY THE ENGINEER FOR THE SPECIFIC PURPOSE INTENDED WILL BE AT THE USER'S SOLE RISK AND WITHOUT LIABILITY OR LEGAL EXPOSURE TO THE ENGINEER.

SEAL

Mechanical site plan

LEASE FLEX. / WAREHOUSE BUILDINGS

MADERA INDUSTRIAL WHSE, LLC

S. SCHNOOR AVENUE, MADERA, CA

JOB NUMBER	21107
DESIGNED BY	RT
DRAWN BY	CD
DATE	9/9/21
SHEET NUMBER	M1

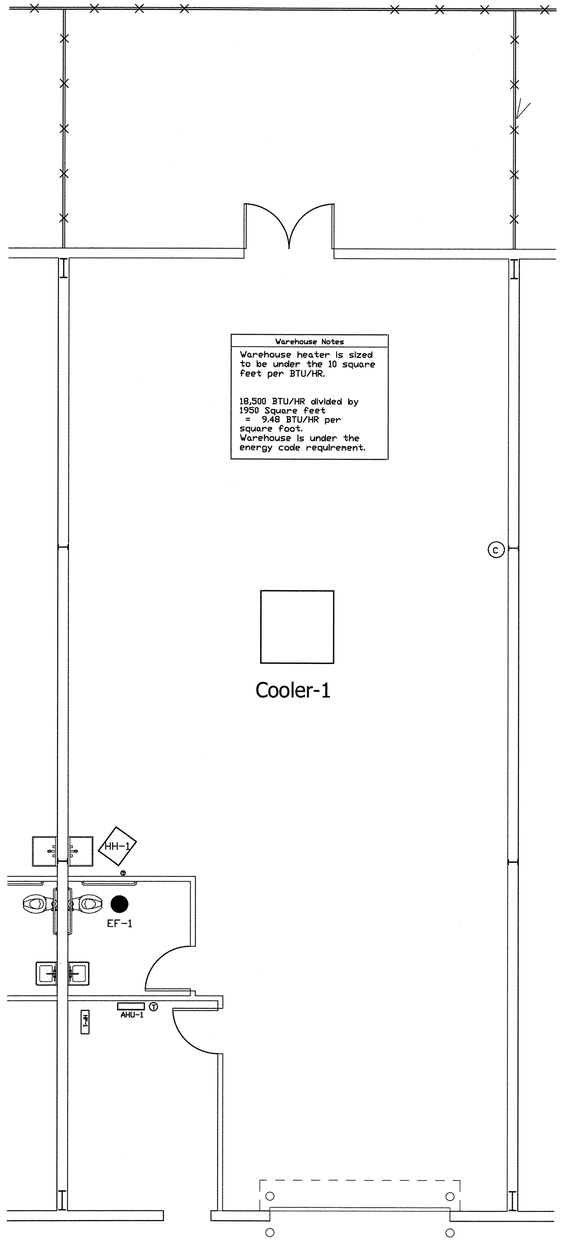

1 / M2 TYP. MECHANICAL FLOOR PLAN
3/32" = 1'-0"

Warehouse Notes
Warehouse heater is sized to be under the 10 square feet per BTU/HR. 18,500 BTU/HR divided by 1950 Square feet = 9.48 BTU/HR per square foot. Warehouse is under the energy code requirenent.

NOTES
Ductless split system condensate to be ran in to nearest vent pipe. To be installed by plumber. Controller for Evap cooler to be mounted on wall 48" above finished floor. Thermostat for ductless split system to be located 48" above finished floor.

LEGEND

- SUPPLY AIR
- RETURN AIR
- Ceiling mount exhaust fan with duct to roof top vent.
- MANUAL DAMPER
- SD Smoke detector, located in supply air plenum.
- CO2 C02 detector located in space 3'-6" above filished floor.
- T THERMOSTAT: MOUNT 48" to top of thermostat A.F.F.
- S SENSOR FOR THERMOSTAT, located in return air duct.
- AHU AIR HANDLING UNIT
- CFM CUBIC FEET PER MINUTE
- CU CONDENSING UNIT
- EF EXHAUST FAN
- SAD SUPPLY AIR DIFFUSER
- SAG SUPPLY AIR GRILLE
- SAR SUPPLY AIR REGISTER
- SF SUPPLY FAN
- RAG RETURN AIR GRILLE
- RTU ROOF TOP UNIT

DUCTLESS SPLIT SYSTEM SCHEDULE:

UNIT	AC Section	CFM.	MCA	MOCP	VOLTS PHASE	COMPRESSOR RLA	COMPRESSOR LRA	COMPRESSOR COOLING CAPACITY	Heat pump HSPF	Heat pump HEATING	Refrigerant	Weight	MAKE/MODEL	EER/Seer RATING
AHU-1	Indoor section	453			208/230/1			9,000		12,000	R410A	29	Fujitsu AUU30RGLX	
HP-1	Outdoor section		9.7	15	208/230/1				13		R410A	68	Fujitsu AOU30RGLX	14 eer 26 Seer

FAN SCHEDULE

UNIT	AREA SERVED	CFM.	SP.	MOTOR HP	MOTOR VOLTS PHASE	RPM	MAKE AND MODEL	REMARKS
EF-1	Bathrooms	100	.125	1/12	120 1		Broan L100	CONTROLLED BY LIGHTING CIRCUIT. PROVIDE BACKDRAFT DAMPER 6" EXHAUST FAN DUCT TO T-TOP ROOF VENT..

Hanging Heater SCHEDULE

UNIT	AREA SERVED	CFM.	KW.	MOTOR HP	MOTOR VOLTS PHASE	RPM	MAKE AND MODEL	REMARKS
HH-1	Warehouse	830	3	1/15	240 1		Modine HER50C1201	CONTROLLED BY low voltage thermostat. Wall mounted
MCA = 42 AMPS.		Heating capacity = 18,500					Weight = 67 lbs	

New Evaporative cooler

UNIT		CFM.	MCA	MOCP	VOLTS PHASE	Electrical MCA						Weight	MAKE/MODEL	Seer/Eer RATING
C-1	warehouse	10,000	7.0	15	208/230 SIngle Ph	7.0						201	Breezair TBSI	
Install Factory wall mounted Controller.														

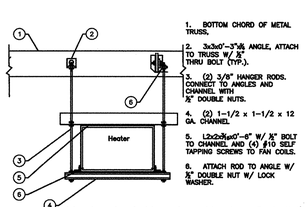

1. BOTTOM CHORD OF METAL TRUSS.
2. 3x3x0'-3"x¼ ANGLE, ATTACH TO TRUSS W/ ½" THRU BOLT (TYP.).
3. (2) 3/8" HANGER RODS. CONNECT TO ANGLES AND CHANNEL WITH ½" DOUBLE NUTS.
4. (2) 1-1/2 x 1-1/2 x 12 GA. CHANNEL
5. L2x2x¼x0'-6" W/ ½" BOLT TO CHANNEL AND (4) #10 SELF TAPPING SCREWS TO FAN COILS.
6. ATTACH ROD TO ANGLE W/ ½" DOUBLE NUT W/ LOCK WASHER.

Mechanical Hanging Heater Details'

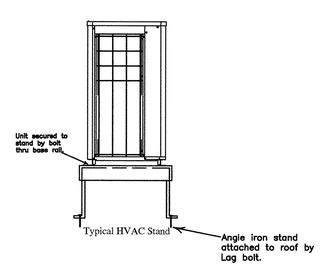

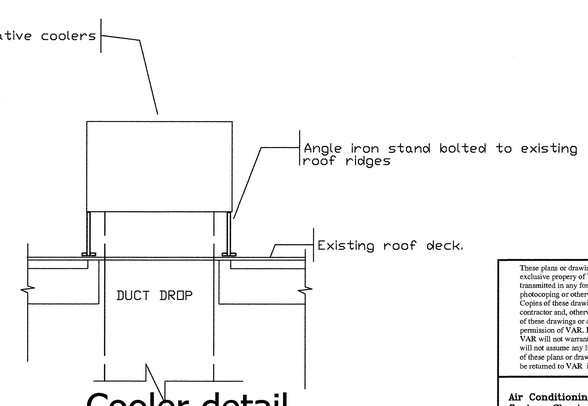

Cooler detail

Exhaust fan detail.
Ducts to be vented to outside.

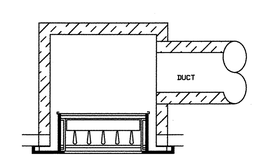

2019CBC
City of Madera
Building Department
The approval of these plans does not prevent the City of Madera from requiring correction of errors or omissions in the plans, specifications, or construction. Subject to all ordinances and approval under codes and ordinances.
APPROVED
By:
Date: MAR 03 2022
2019CBC 2019CBC

These plans or drawings or any part of these publications are the exclusive property of VAR, and may not be reproduced, or transmitted in any form or by means, recording, electronic, mechanical, photocopying or otherwise without written permission by VAR. Copies of these drawings are supplied to the owner or the Building contractor and, otherwise for the use of this project only. Any Re-use of these drawings or documents is prohibited without the written permission of VAR. If VAR is not awarded the project, VAR will not warranty these plans, drawings or contents and will not assume any liability or responsibility for the unauthorized use of these plans or drawings, and the plans or drawings and contents must be returned to VAR immediately.

VAR
Since 1970
825 S Topeka Ave
Fresno CA, 93721
559-237-3188

Air Conditioning & Heating
Custom Sheet Metal
Sales & Service

Signed Steve Mendrin Date 9-10-21
Steve Mendrin
License #689606
Valley Air Conditioning & Repair.

Valley Air Conditioning & Repair, Inc. VAR Since 1970

50 Years of Indoor comfort.

DBKO DESIGN BUILD
LCP#102226

DATE	REVISION	BY

SEAL

ANY INFORMATION OR DATA ON THIS DRAWING IS NOT INTENDED TO BE SUITABLE FOR REUSE BY ANY PERSON, FIRM, CORPORATION, OR ANY OTHERS ON EXTENSIONS OF THIS PROJECT OR FOR ANY USE ON ANY OTHER PROJECT. ANY REUSE WITHOUT WRITTEN VERIFICATION AND ADAPTATION BY THE ENGINEER FOR THE SPECIFIC PURPOSE INTENDED WILL BE AT THE USER'S SOLE RISK AND WITHOUT LIABILITY OR LEGAL EXPOSURE TO THE ENGINEER.

TYPICAL MECHANICAL FLOOR PLAN

LEASE FLEX. / WAREHOUSE BUILDINGS
FOR
MADERA INDUSTRIAL WHSE, LLC
S. SCHNOOR AVENUE, MADERA, CA

JOB NUMBER 21107
DESIGNED BY
DRAWN BY
DATE 9/09/2021
SHEET NUMBER M2

Project Name:	Madera Industrial WHSE	NRCC-PRF-01-E	Page 1 of 33
Project Address:	S. Schnoor Avenue Madera	Calculation Date/Time:	10:23, Thu, Nov 18, 2021
Input File Name:	2020.264 Energy Calcs (2x4).cibd19x		

A. GENERAL INFORMATION

1	Project Location (city)	Madera	8	Standards Version	Compliance2019
2	CA Zip Code		9	Compliance Software (version)	EnergyPro 8.2
3	Climate Zone	13	10	Weather File	FRESNO_723890_CZ2010.epw
4	Total Conditioned Floor Area in Scope	12,069 ft²	11	Building Orientation (deg)	(N) 0 deg
5	Total Unconditioned Floor Area	136,101 ft²	12	Permitted Scope of Work	NewComplete
6	Total # of Stories (Habitable Above Grade)	1	13	Building Type(s)	Nonresidential
7	Total # of dwelling units	0	14	Gas Type	NaturalGas

B. PROJECT SUMMARY

Note Instruction: Table B shows which building components are included in the performance calculation. If indicated as not included, the project must show compliance prescriptively if within permit application.

Building Components Complying via Performance				Building Components Complying Prescriptively	
Envelope (see Table G)	☒ Performance		☐ Performance	*The following building components are ONLY eligible for prescriptive compliance and should be documented on the NRCC form listed if within the scope of the permit application (i.e. compliance will not be shown on the NRCC-PRF-E).*	
	☐ Not Included	Covered Process: Commercial Kitchens	☒ Not Included		
Mechanical (see Table H)	☒ Performance	Covered Process: Computer Rooms	☐ Performance	Indoor Lighting (Unconditioned) §140.6	*NRCC-LTI-E*
	☐ Not Included		☒ Not Included	Outdoor Lighting §140.7	*NRCC-LTO-E*
Domestic Hot Water (see Table I)	☒ Performance	Covered Process: Laboratory Exhaust	☐ Performance	Sign Lighting §140.8	*NRCC-LTS-E*
	☐ Not Included		☒ Not Included	Mandatory Measures	
Lighting (Indoor Conditioned, see Table K)	☒ Performance			*Electrical power systems, commissioning, solar ready, elevator and escalator requirements are mandatory and should on the NRCC form listed if applicable (i.e. compliance will not be shown on the NRCC-PRF-E.)*	
	☐ Not Included			Electrical Power Distribution §110.11	*NRCC-ELC-E*
Solar Thermal Water Heating (see Table J)	☐ Performance			Commissioning §120.8	*NRCC-CXR-E*
	☒ Not Included			Solar Ready §110.10	*NRCC-SRA-E*

Project Name:	Madera Industrial WHSE	NRCC-PRF-01-E	Page 2 of 33
Project Address:	S. Schnoor Avenue Madera	Calculation Date/Time:	10:23, Thu, Nov 18, 2021
Input File Name:	2020.264 Energy Calcs (2x4).cibd19x		

C1. COMPLIANCE RESULTS FOR PERFORMANCE COMPONENTS (Annual TDV Energy Use, kBtu/ft²-yr)

COMPLIES

Energy Component	Standard Design (TDV)	Proposed Design (TDV)	Compliance Margin (TDV)[1]
Space Heating	35.66	47.54	-11.88
Space Cooling	138.70	123.78	15.92
Indoor Fans	206.89	140.42	66.47
Heat Rejection	--	--	--
Pumps & Misc.	--	--	--
Domestic Hot Water	22.62	35.21	-12.59
Indoor Lighting	43.34	43.34	--
ENERGY STANDARDS COMPLIANCE TOTAL	**448.21**	**390.29**	**57.92 (12.9%)**

[1] *Notes: The number in parenthesis following the Compliance Margin in column 4. represents the Percent Better than Standard.*

C2. RESULTS FOR 'ABOVE CODE' QUALIFICATIONS[1]

☐ This project is pursuing CalGreen Tier 1 ☐ This project is pursuing CalGreen Tier 2

Miscellaneous Energy Component	Standard Design (TDV)	Proposed Design (TDV)	Compliance Margin (TDV)[1]
Receptacle	284.67	284.67	--
Process	--	--	--
Other Ltg	319.79	319.79	--
Process Motors	--	--	--
COMPLIANCE TOTAL PLUS MISCELLANEOUS COMPONENTS	**1,052.47**	**994.75**	**57.9 (5.5%)**

[1] *Notes: This table is used to document compliance with programs OTHER THAN Title 24 Part 6, if applicable.*

Project Name:	Madera Industrial WHSE	NRCC-PRF-01-E	Page 3 of 33
Project Address:	S. Schnoor Avenue Madera	Calculation Date/Time:	10:23, Thu, Nov 18, 2021
Input File Name:	2020.264 Energy Calcs (2x4).cibd19x		

C3. ENERGY USE SUMMARY

Energy Component	Standard Design Site (MWh)	Proposed Design Site (MWh)	Margin (MWh)	Standard Design Site (MBtu)	Proposed Design Site (MBtu)	Margin (MBtu)
Space Heating	--	22.9	--	209.1	--	--
Space Cooling	41.0	39.2	1.8	--	--	--
Indoor Fans	85.1	59.7	25.4	--	--	--
Heat Rejection	--	--	--	--	--	--
Pumps & Misc.	--	--	--	--	--	--
Domestic Hot Water	10.0	15.5	-5.5	--	--	--
Indoor Lighting	19.0	19.0	0.0	--	--	--
Compliance Total	**155.1**	**156.3**	**-1.2**	**209.1**	**0.0**	--
Receptacle	126.3	126.3	0.0	--	--	--
Process	--	--	--	--	--	--
Other Ltg	140.5	140.5	0.0	--	--	--
Process Motors	--	--	--	--	--	--
TOTAL	**421.9**	**423.1**	**-1.2**	**209.1**	**0.0**	--

D. EXCEPTIONAL CONDITIONS

The user model includes space(s) that are designed to be served by mechanical cooling systems, but the cooling systems were not included in the simulation model. A cooling system has been modeled for both the proposed and standard cases.

The user model includes space(s) without sufficient cooling equipment. Cooling equipment has been added to the model to meet cooling loads.

E. HERS VERIFICATION

This Section Does Not Apply

Project Name:	Madera Industrial WHSE	NRCC-PRF-01-E	Page 4 of 33
Project Address:	S. Schnoor Avenue Madera	Calculation Date/Time:	10:23, Thu, Nov 18, 2021
Input File Name:	2020.264 Energy Calcs (2x4).cibd19x		

G1. ENVELOPE GENERAL INFORMATION (conditioned spaces only)

1	2	3	4
Opaque Surfaces & Orientation	Total Gross Surface Area (ft²)	Total Fenestration Area (ft²)	Window to Wall Ratio (%)
North-Facing[1]	3,264 ft²	0 ft²	00.0%
East-Facing[2]	540 ft²	0 ft²	00.0%
South-Facing[3]	4,032 ft²	0 ft²	00.0%
West-Facing[4]	270 ft²	0 ft²	00.0%
Total	**8,106 ft²**	**0 ft²**	**00.0%**
Roof	12,069 ft²	0 ft²	00.0%

Notes:
[1] *North-Facing is oriented to within 45 degrees of true north, including 45°00'00" east of north (NE), but excluding 45°00'00" west of north (NW).*
[2] *East-Facing is oriented to within 45 degrees of true east, including 45°00'00" south of east (SE), but excluding 45°00'00" north of east (NE).*
[3] *South-Facing is oriented to within 45 degrees of true south, including 45°00'00" west of south (SW), but excluding 45°00'00" east of south (SE).*
[4] *West-Facing is oriented to within 45 degrees of true west, including 45°00'00" north of due west (NW), but excluding 45°00'00" south of west (SW).*

G3. OPAQUE SURFACE ASSEMBLY SUMMARY

1	2	3	4	5	6	7	8	9	10
Surface Name	Surface Type	Area (ft²)	Framing Type	Cavity R-Value	Continuous R-Value	Units	Value	Description of Assembly Layers	Status[1]
Slab On Grade8	UndergroundFloor	148170	NA	0	NA	F-Factor	0.73	Slab Type = UnheatedSlabOnGrade Insulation Orientation = None Insulation R-Value = R0	N
Ceiling10	Roof	17541	Metal	30	NA	U-Factor	0.062	Air - Ceiling - 3/4 in. Metal framed roof, 24in. OC, 9.25in., R-30 Gypsum Board - 1/2 in.	N
2x4 Metal Stud wall w/ Fo12	InteriorWall	27360	Metal	15	3	U-Factor	0.112	Gypsum Board - 5/8 in. Cellular polyisocyanurate (surfaced) - 1/2 in. R2.9 Metal framed wall, 24in. OC, 3.5in., R-15 Gypsum Board - 5/8 in.	N

Project Name:	Madera Industrial WHSE	NRCC-PRF-01-E	Page 5 of 33
Project Address:	S. Schnoor Avenue Madera	Calculation Date/Time:	10:23, Thu, Nov 18, 2021
Input File Name:	2020.264 Energy Calcs (2x4).cibd19x		

G3. OPAQUE SURFACE ASSEMBLY SUMMARY

1	2	3	4	5	6	7	8	9	10
Surface Name	Surface Type	Area (ft²)	Framing Type	Cavity R-Value	Continuous R-Value	Units	Value	Description of Assembly Layers	Status[1]
Exterior Metal Building W18	ExteriorWall	17810	NA	26	NA	U-Factor	0.055	Metal Siding - 1/16 in. Metal building wall, double layer batt, R-26 Gypsum Board - 5/8 in.	N
2x4 Metal Stud wall25	InteriorWall	13338	Metal	13	NA	U-Factor	0.170	Gypsum Board - 5/8 in. Metal framed wall, 24in. OC, 3.5in., R-13 Gypsum Board - 5/8 in.	N
Metal Building Roof (Buil36	Roof	130629	NA	10	NA	U-Factor	0.115	Metal Standing Seam - 1/16 in. Metal standing seam roof, R-10	N
Exterior Metal Building W38	ExteriorWall	88464	NA	0	NA	U-Factor	1.176	Metal Siding - 1/16 in. Metal building wall, single layer batt, R-0	N
Interior Warehouse Demisi41	InteriorWall	182898	NA	19	NA	U-Factor	0.063	Gypsum Board - 5/8 in. Metal building wall, double layer batt, R-19 Gypsum Board - 5/8 in.	N
Interior Office Demising54	InteriorWall	9450	NA	19	NA	U-Factor	0.063	Gypsum Board - 5/8 in. Metal building wall, double layer batt, R-19 Gypsum Board - 5/8 in.	N
Interior Restroom Demisi63	InteriorWall	5040	NA	19	NA	U-Factor	0.063	Gypsum Board - 5/8 in. Metal building wall, double layer batt, R-19 Gypsum Board - 5/8 in.	N

[1] *Status: N - New, A - Altered, E - Existing*

G4. OPAQUE DOOR SUMMARY

1	2	3
Assembly Name	Overall U-factor	Status[1]
Wood Door16	0.500	N

Project Name:	Madera Industrial WHSE	NRCC-PRF-01-E	Page 6 of 33
Project Address:	S. Schnoor Avenue Madera	Calculation Date/Time:	10:23, Thu, Nov 18, 2021
Input File Name:	2020.264 Energy Calcs (2x4).cibd19x		

G4. OPAQUE DOOR SUMMARY

1	2	3
Assembly Name	Overall U-factor	Status[1]
Metal Door20	0.700	N
Roll-up Door44	1.450	N

H1. DRY SYSTEM EQUIPMENT (furnaces, air handling units, heat pumps, VRF, economizers etc.)

1	2	3	4	5	6	7	8	9	10	11	12
			Heating				Cooling				
Equipment Name	Equipment Type	Qty	Total Heating Output (kBtu/h)	Supp Heat Output (kBtuh)	Efficiency Unit	Efficiency	Total Cooling Output (kBtu/h)	Efficiency Unit	Efficiency	Economizer Type (if present)	Status[1]
Building A Suite #1	SZAC (Split1Phase)	1	12	0			9	SEER EER	14.000 12.200	NoEconomizer	N
Building A Suite #2	SZAC (Split1Phase)	1	12	0			9	SEER EER	14.000 12.200	NoEconomizer	N
Building A Suite #3	SZAC (Split1Phase)	1	12	0			9	SEER EER	14.000 12.200	NoEconomizer	N
Building A Suite #4	SZAC (Split1Phase)	1	12	0			9	SEER EER	14.000 12.200	NoEconomizer	N
Building A Suite #5	SZAC (Split1Phase)	1	12	0			9	SEER EER	14.000 12.200	NoEconomizer	N
Building A Suite #6	SZAC (Split1Phase)	1	12	0			9	SEER EER	14.000 12.200	NoEconomizer	N
Building A Suite #7	SZAC (Split1Phase)	1	12	0			9	SEER EER	14.000 12.200	NoEconomizer	N
Building A Suite #8	SZAC (Split1Phase)	1	12	0			9	SEER EER	14.000 12.200	NoEconomizer	N
Building A Suite #9	SZAC (Split1Phase)	1	12	0			9	SEER EER	14.000 12.200	NoEconomizer	N

Project Name:	Madera Industrial WHSE	NRCC-PRF-01-E	Page 7 of 33
Project Address:	S. Schnoor Avenue Madera	Calculation Date/Time:	10:23, Thu, Nov 18, 2021
Input File Name:	2020.264 Energy Calcs (2x4).cibd19x		

H1. DRY SYSTEM EQUIPMENT (furnaces, air handling units, heat pumps, VRF, economizers etc.)

1	2	3	4	5	6	7	8	9	10	11	12
			Heating				Cooling				
Equipment Name	Equipment Type	Qty	Total Heating Output (kBtu/h)	Supp Heat Output (kBtuh)	Efficiency Unit	Efficiency	Total Cooling Output (kBtu/h)	Efficiency Unit	Efficiency	Economizer Type (if present)	Status[1]
Building A Suite #10	SZAC (Split1Phase)	1	12	0			9	SEER EER	14.000 12.200	NoEconomizer	N
Building A Suite #11	SZAC (Split1Phase)	1	12	0			9	SEER EER	14.000 12.200	NoEconomizer	N
Building A Suite #12	SZAC (Split1Phase)	1	12	0			9	SEER EER	14.000 12.200	NoEconomizer	N
Building A Suite #13	SZAC (Split1Phase)	1	12	0			9	SEER EER	14.000 12.200	NoEconomizer	N
Building A Suite #14	SZAC (Split1Phase)	1	12	0			9	SEER EER	14.000 12.200	NoEconomizer	N
Building A Suite #15	SZAC (Split1Phase)	1	12	0			9	SEER EER	14.000 12.200	NoEconomizer	N
Building A Suite #16	SZAC (Split1Phase)	1	12	0			9	SEER EER	14.000 12.200	NoEconomizer	N
Building A Suite #17	SZAC (Split1Phase)	1	12	0			9	SEER EER	14.000 12.200	NoEconomizer	N
Building A Suite #18	SZAC (Split1Phase)	1	12	0			9	SEER EER	14.000 12.200	NoEconomizer	N
Building A Suite #19	SZAC (Split1Phase)	1	12	0			9	SEER EER	14.000 12.200	NoEconomizer	N
Building B Suite #1	SZAC (Split1Phase)	1	12	0			9	SEER EER	14.000 12.200	NoEconomizer	N
Building B Suite #2	SZAC (Split1Phase)	1	12	0			9	SEER EER	14.000 12.200	NoEconomizer	N
Building B Suite #3	SZAC (Split1Phase)	1	12	0			9	SEER EER	14.000 12.200	NoEconomizer	N
Building B Suite #4	SZAC (Split1Phase)	1	12	0			9	SEER EER	14.000 12.200	NoEconomizer	N

Project Name:	Madera Industrial WHSE	NRCC-PRF-01-E	Page 8 of 33
Project Address:	S. Schnoor Avenue Madera	Calculation Date/Time:	10:23, Thu, Nov 18, 2021
Input File Name:	2020.264 Energy Calcs (2x4).cibd19x		

H1. DRY SYSTEM EQUIPMENT (furnaces, air handling units, heat pumps, VRF, economizers etc.)

1	2	3	4	5	6	7	8	9	10	11	12
			Heating				Cooling				
Equipment Name	Equipment Type	Qty	Total Heating Output (kBtu/h)	Supp Heat Output (kBtuh)	Efficiency Unit	Efficiency	Total Cooling Output (kBtu/h)	Efficiency Unit	Efficiency	Economizer Type (if present)	Status[1]
Building B Suite #5	SZAC (Split1Phase)	1	12	0			9	SEER EER	14.000 12.200	NoEconomizer	N
Building B Suite #6	SZAC (Split1Phase)	1	12	0			9	SEER EER	14.000 12.200	NoEconomizer	N
Building B Suite #7	SZAC (Split1Phase)	1	12	0			9	SEER EER	14.000 12.200	NoEconomizer	N
Building B Suite #8	SZAC (Split1Phase)	1	12	0			9	SEER EER	14.000 12.200	NoEconomizer	N
Building B Suite #9	SZAC (Split1Phase)	1	12	0			9	SEER EER	14.000 12.200	NoEconomizer	N
Building B Suite #10	SZAC (Split1Phase)	1	12	0			9	SEER EER	14.000 12.200	NoEconomizer	N
Building B Suite #11	SZAC (Split1Phase)	1	12	0			9	SEER EER	14.000 12.200	NoEconomizer	N
Building B Suite #12	SZAC (Split1Phase)	1	12	0			9	SEER EER	14.000 12.200	NoEconomizer	N
Building B Suite #13	SZAC (Split1Phase)	1	12	0			9	SEER EER	14.000 12.200	NoEconomizer	N
Building B Suite #14	SZAC (Split1Phase)	1	12	0			9	SEER EER	14.000 12.200	NoEconomizer	N
Building B Suite #15	SZAC (Split1Phase)	1	12	0			9	SEER EER	14.000 12.200	NoEconomizer	N
Building B Suite #16	SZAC (Split1Phase)	1	12	0			9	SEER EER	14.000 12.200	NoEconomizer	N
Building B Suite #17	SZAC (Split1Phase)	1	12	0			9	SEER EER	14.000 12.200	NoEconomizer	N
Building B Suite #18	SZAC (Split1Phase)	1	12	0			9	SEER EER	14.000 12.200	NoEconomizer	N

Project Name:	Madera Industrial WHSE	NRCC-PRF-01-E	Page 9 of 33
Project Address:	S. Schnoor Avenue Madera	Calculation Date/Time:	10:23, Thu, Nov 18, 2021
Input File Name:	2020.264 Energy Calcs (2x4).cibd19x		

H1. DRY SYSTEM EQUIPMENT (furnaces, air handling units, heat pumps, VRF, economizers etc.)

1	2	3	4	5	6	7	8	9	10	11	12
			Heating				Cooling				
Equipment Name	Equipment Type	Qty	Total Heating Output (kBtu/h)	Supp Heat Output (kBtuh)	Efficiency Unit	Efficiency	Total Cooling Output (kBtu/h)	Efficiency Unit	Efficiency	Economizer Type (if present)	Status[1]
Building B Suite #19	SZAC (Split1Phase)	1	12	0			9	SEER EER	14.000 12.200	NoEconomizer	N
Building C Suite #1	SZAC (Split1Phase)	1	12	0			9	SEER EER	14.000 12.200	NoEconomizer	N
Building C Suite #2	SZAC (Split1Phase)	1	12	0			9	SEER EER	14.000 12.200	NoEconomizer	N
Building C Suite #3	SZAC (Split1Phase)	1	12	0			9	SEER EER	14.000 12.200	NoEconomizer	N
Building C Suite #4	SZAC (Split1Phase)	1	12	0			9	SEER EER	14.000 12.200	NoEconomizer	N
Building C Suite #5	SZAC (Split1Phase)	1	12	0			9	SEER EER	14.000 12.200	NoEconomizer	N
Building C Suite #6	SZAC (Split1Phase)	1	12	0			9	SEER EER	14.000 12.200	NoEconomizer	N
Building C Suite #7	SZAC (Split1Phase)	1	12	0			9	SEER EER	14.000 12.200	NoEconomizer	N
Building C Suite #8	SZAC (Split1Phase)	1	12	0			9	SEER EER	14.000 12.200	NoEconomizer	N
Building C Suite #9	SZAC (Split1Phase)	1	12	0			9	SEER EER	14.000 12.200	NoEconomizer	N
Building C Suite #10	SZAC (Split1Phase)	1	12	0			9	SEER EER	14.000 12.200	NoEconomizer	N
Building C Suite #11	SZAC (Split1Phase)	1	12	0			9	SEER EER	14.000 12.200	NoEconomizer	N
Building C Suite #12	SZAC (Split1Phase)	1	12	0			9	SEER EER	14.000 12.200	NoEconomizer	N
Building C Suite #13	SZAC (Split1Phase)	1	12	0			9	SEER EER	14.000 12.200	NoEconomizer	N

Project Name:	Madera Industrial WHSE	NRCC-PRF-01-E	Page 10 of 33
Project Address:	S. Schnoor Avenue Madera	Calculation Date/Time:	10:23, Thu, Nov 18, 2021
Input File Name:	2020.264 Energy Calcs (2x4).cibd19x		

H1. DRY SYSTEM EQUIPMENT (furnaces, air handling units, heat pumps, VRF, economizers etc.)

1	2	3	4	5	6	7	8	9	10	11	12
			Heating				Cooling				
Equipment Name	Equipment Type	Qty	Total Heating Output (kBtu/h)	Supp Heat Output (kBtuh)	Efficiency Unit	Efficiency	Total Cooling Output (kBtu/h)	Efficiency Unit	Efficiency	Economizer Type (if present)	Status[1]
Building C Suite #14	SZAC (Split1Phase)	1	12	0			9	SEER EER	14.000 12.200	NoEconomizer	N
Building C Suite #15	SZAC (Split1Phase)	1	12	0			9	SEER EER	14.000 12.200	NoEconomizer	N
Building C Suite #16	SZAC (Split1Phase)	1	12	0			9	SEER EER	14.000 12.200	NoEconomizer	N
Building C Suite #17	SZAC (Split1Phase)	1	12	0			9	SEER EER	14.000 12.200	NoEconomizer	N
Building C Suite #18	SZAC (Split1Phase)	1	12	0			9	SEER EER	14.000 12.200	NoEconomizer	N
Building C Suite #19	SZAC (Split1Phase)	1	12	0			9	SEER EER	14.000 12.200	NoEconomizer	N
Building D Suite #1	SZAC (Split1Phase)	1	12	0			9	SEER EER	14.000 12.200	NoEconomizer	N
Building D Suite #2	SZAC (Split1Phase)	1	12	0			9	SEER EER	14.000 12.200	NoEconomizer	N
Building D Suite #3	SZAC (Split1Phase)	1	12	0			9	SEER EER	14.000 12.200	NoEconomizer	N
Building D Suite #4	SZAC (Split1Phase)	1	12	0			9	SEER EER	14.000 12.200	NoEconomizer	N
Building D Suite #5	SZAC (Split1Phase)	1	12	0			9	SEER EER	14.000 12.200	NoEconomizer	N
Building D Suite #6	SZAC (Split1Phase)	1	12	0			9	SEER EER	14.000 12.200	NoEconomizer	N
Building D Suite #7	SZAC (Split1Phase)	1	12	0			9	SEER EER	14.000 12.200	NoEconomizer	N
Building D Suite #8	SZAC (Split1Phase)	1	12	0			9	SEER EER	14.000 12.200	NoEconomizer	N

Project Name:	Madera Industrial WHSE	NRCC-PRF-01-E	Page 1 of 33
Project Address:	S. Schnoor Avenue Madera	Calculation Date/Time:	10:23, Thu, Nov 18, 2021
Input File Name:	2020.264 Energy Calcs (2x4).cibd19x		

H1. DRY SYSTEM EQUIPMENT (furnaces, air handling units, heat pumps, VRF, economizers etc.)

1	2	3	4	5	6	7	8	9	10	11	12
			Heating				Cooling				
Equipment Name	Equipment Type	Qty	Total Heating Output (kBtu/h)	Supp Heat Output (kBtuh)	Efficiency Unit	Efficiency	Total Cooling Output (kBtu/h)	Efficiency Unit	Efficiency	Economizer Type (if present)	Status[1]
Building D Suite #9	SZAC (Split1Phase)	1	12	0			9	SEER EER	14.000 12.200	NoEconomizer	N
Building D Suite #10	SZAC (Split1Phase)	1	12	0			9	SEER EER	14.000 12.200	NoEconomizer	N
Building D Suite #11	SZAC (Split1Phase)	1	12	0			9	SEER EER	14.000 12.200	NoEconomizer	N
Building D Suite #12	SZAC (Split1Phase)	1	12	0			9	SEER EER	14.000 12.200	NoEconomizer	N
Building D Suite #13	SZAC (Split1Phase)	1	12	0			9	SEER EER	14.000 12.200	NoEconomizer	N
Building D Suite #14	SZAC (Split1Phase)	1	12	0			9	SEER EER	14.000 12.200	NoEconomizer	N
Building D Suite #15	SZAC (Split1Phase)	1	12	0			9	SEER EER	14.000 12.200	NoEconomizer	N
Building D Suite #16	SZAC (Split1Phase)	1	12	0			9	SEER EER	14.000 12.200	NoEconomizer	N
Building D Suite #17	SZAC (Split1Phase)	1	12	0			9	SEER EER	14.000 12.200	NoEconomizer	N
Building D Suite #18	SZAC (Split1Phase)	1	12	0			9	SEER EER	14.000 12.200	NoEconomizer	N
Building D Suite #19	SZAC (Split1Phase)	1	12	0			9	SEER EER	14.000 12.200	NoEconomizer	N

Status: N - New, A - Altered, E - Existing

Project Name:	Madera Industrial WHSE	NRCC-PRF-01-E	Page 12 of 33
Project Address:	S. Schnoor Avenue Madera	Calculation Date/Time:	10:23, Thu, Nov 18, 2021
Input File Name:	2020.264 Energy Calcs (2x4).cibd19x		

H2. FAN SYSTEMS SUMMARY[1]

1	2	3	4	5	6	7	8	9	10	11	12	13
	System Type	Design OA	Supply Fan				Return Fan					
Name or Item Tag	packaged, DOAS, etc.	CFM	CFM	BHP	Watts	Control	CFM	BHP	Watts	Control	Economizer Type (if present)	Status[2]
Building A Suite #1	SZAC	24	453	0.160	139.9	ConstantVolume	NA	NA	NA	NA	NoEconomizer	N
Building A Suite #2	SZAC	24	453	0.160	139.9	ConstantVolume	NA	NA	NA	NA	NoEconomizer	N
Building A Suite #3	SZAC	24	453	0.160	139.9	ConstantVolume	NA	NA	NA	NA	NoEconomizer	N
Building A Suite #4	SZAC	24	453	0.160	139.9	ConstantVolume	NA	NA	NA	NA	NoEconomizer	N
Building A Suite #5	SZAC	24	453	0.160	139.9	ConstantVolume	NA	NA	NA	NA	NoEconomizer	N
Building A Suite #6	SZAC	24	453	0.160	139.9	ConstantVolume	NA	NA	NA	NA	NoEconomizer	N
Building A Suite #7	SZAC	24	453	0.160	139.9	ConstantVolume	NA	NA	NA	NA	NoEconomizer	N
Building A Suite #8	SZAC	24	453	0.160	139.9	ConstantVolume	NA	NA	NA	NA	NoEconomizer	N
Building A Suite #9	SZAC	24	453	0.160	139.9	ConstantVolume	NA	NA	NA	NA	NoEconomizer	N
Building A Suite #10	SZAC	24	453	0.160	139.9	ConstantVolume	NA	NA	NA	NA	NoEconomizer	N
Building A Suite #11	SZAC	24	453	0.160	139.9	ConstantVolume	NA	NA	NA	NA	NoEconomizer	N
Building A Suite #12	SZAC	24	453	0.160	139.9	ConstantVolume	NA	NA	NA	NA	NoEconomizer	N
Building A Suite #13	SZAC	24	453	0.160	139.9	ConstantVolume	NA	NA	NA	NA	NoEconomizer	N
Building A Suite #14	SZAC	24	453	0.160	139.9	ConstantVolume	NA	NA	NA	NA	NoEconomizer	N
Building A Suite #15	SZAC	24	453	0.160	139.9	ConstantVolume	NA	NA	NA	NA	NoEconomizer	N
Building A Suite #16	SZAC	24	453	0.160	139.9	ConstantVolume	NA	NA	NA	NA	NoEconomizer	N
Building A Suite #17	SZAC	24	453	0.160	139.9	ConstantVolume	NA	NA	NA	NA	NoEconomizer	N
Building A Suite #18	SZAC	24	453	0.160	139.9	ConstantVolume	NA	NA	NA	NA	NoEconomizer	N
Building A Suite #19	SZAC	24	453	0.160	139.9	ConstantVolume	NA	NA	NA	NA	NoEconomizer	N
Building B Suite #1	SZAC	24	453	0.160	139.9	ConstantVolume	NA	NA	NA	NA	NoEconomizer	N
Building B Suite #2	SZA

Project Name:	Madera Industrial WHSE	NRCC-PRF-01-E	Page 13 of 33
Project Address:	S. Schnoor Avenue Madera	Calculation Date/Time:	10:23, Thu, Nov 18, 2021
Input File Name:	2020.264 Energy Calcs (2x4).cibd19x		

H2. FAN SYSTEMS SUMMARY[1]

1	2	3	4	5	6	7	8	9	10	11	12	13
Name or Item Tag	System Type	Design OA	Supply Fan				Return Fan				Economizer Type (if present)	Status[5]
	packaged, DOAS, etc.	CFM	CFM	BHP	Watts	Control	CFM	BHP	Watts	Control		
Building B Suite #7	SZAC	24	453	0.160	139.9	ConstantVolume	NA	NA	NA	NA	NoEconomizer	N
Building B Suite #8	SZAC	24	453	0.160	139.9	ConstantVolume	NA	NA	NA	NA	NoEconomizer	N
Building B Suite #9	SZAC	24	453	0.160	139.9	ConstantVolume	NA	NA	NA	NA	NoEconomizer	N
Building B Suite #10	SZAC	24	453	0.160	139.9	ConstantVolume	NA	NA	NA	NA	NoEconomizer	N
Building B Suite #11	SZAC	24	453	0.160	139.9	ConstantVolume	NA	NA	NA	NA	NoEconomizer	N
Building B Suite #12	SZAC	24	453	0.160	139.9	ConstantVolume	NA	NA	NA	NA	NoEconomizer	N
Building B Suite #13	SZAC	24	453	0.160	139.9	ConstantVolume	NA	NA	NA	NA	NoEconomizer	N
Building B Suite #14	SZAC	24	453	0.160	139.9	ConstantVolume	NA	NA	NA	NA	NoEconomizer	N
Building B Suite #15	SZAC	24	453	0.160	139.9	ConstantVolume	NA	NA	NA	NA	NoEconomizer	N
Building B Suite #16	SZAC	24	453	0.160	139.9	ConstantVolume	NA	NA	NA	NA	NoEconomizer	N
Building B Suite #17	SZAC	24	453	0.160	139.9	ConstantVolume	NA	NA	NA	NA	NoEconomizer	N
Building B Suite #18	SZAC	24	453	0.160	139.9	ConstantVolume	NA	NA	NA	NA	NoEconomizer	N
Building B Suite #19	SZAC	24	453	0.160	139.9	ConstantVolume	NA	NA	NA	NA	NoEconomizer	N
Building C Suite #1	SZAC	24	453	0.160	139.9	ConstantVolume	NA	NA	NA	NA	NoEconomizer	N
Building C Suite #2	SZAC	24	453	0.160	139.9	ConstantVolume	NA	NA	NA	NA	NoEconomizer	N
Building C Suite #3	SZAC	24	453	0.160	139.9	ConstantVolume	NA	NA	NA	NA	NoEconomizer	N
Building C Suite #4	SZAC	24	453	0.160	139.9	ConstantVolume	NA	NA	NA	NA	NoEconomizer	N
Building C Suite #5	SZAC	24	453	0.160	139.9	ConstantVolume	NA	NA	NA	NA	NoEconomizer	N
Building C Suite #6	SZAC	24	453	0.160	139.9	ConstantVolume	NA	NA	NA	NA	NoEconomizer	N
Building C Suite #7	SZAC	24	453	0.160	139.9	ConstantVolume	NA	NA	NA	NA	NoEconomizer	N
Building C Suite #8	SZAC	24	453	0.160	139.9	ConstantVolume	NA	NA	NA	NA	NoEconomizer	N
Building C Suite #9	SZAC	24	453	0.160	139.9	ConstantVolume	NA	NA	NA	NA	NoEconomizer	N
Building C Suite #10	SZAC	24	453	0.160	139.9	ConstantVolume	NA	NA	NA	NA	NoEconomizer	N
Building C Suite #11	SZAC	24	453	0.160	139.9	ConstantVolume	NA	NA	NA	NA	NoEconomizer	N
Building C Suite #12	SZAC	24	453	0.160	139.9	ConstantVolume	NA	NA	NA	NA	NoEconomizer	N

Project Name:	Madera Industrial WHSE	NRCC-PRF-01-E	Page 14 of 33
Project Address:	S. Schnoor Avenue Madera	Calculation Date/Time:	10:23, Thu, Nov 18, 2021
Input File Name:	2020.264 Energy Calcs (2x4).cibd19x		

H2. FAN SYSTEMS SUMMARY[1]

1	2	3	4	5	6	7	8	9	10	11	12	13
Name or Item Tag	System Type	Design OA	Supply Fan				Return Fan				Economizer Type (if present)	Status[5]
	packaged, DOAS, etc.	CFM	CFM	BHP	Watts	Control	CFM	BHP	Watts	Control		
Building C Suite #13	SZAC	24	453	0.160	139.9	ConstantVolume	NA	NA	NA	NA	NoEconomizer	N
Building C Suite #14	SZAC	24	453	0.160	139.9	ConstantVolume	NA	NA	NA	NA	NoEconomizer	N
Building C Suite #15	SZAC	24	453	0.160	139.9	ConstantVolume	NA	NA	NA	NA	NoEconomizer	N
Building C Suite #16	SZAC	24	453	0.160	139.9	ConstantVolume	NA	NA	NA	NA	NoEconomizer	N
Building C Suite #17	SZAC	24	453	0.160	139.9	ConstantVolume	NA	NA	NA	NA	NoEconomizer	N
Building C Suite #18	SZAC	24	453	0.160	139.9	ConstantVolume	NA	NA	NA	NA	NoEconomizer	N
Building C Suite #19	SZAC	24	453	0.160	139.9	ConstantVolume	NA	NA	NA	NA	NoEconomizer	N
Building D Suite #1	SZAC	24	453	0.160	139.9	ConstantVolume	NA	NA	NA	NA	NoEconomizer	N
Building D Suite #2	SZAC	24	453	0.160	139.9	ConstantVolume	NA	NA	NA	NA	NoEconomizer	N
Building D Suite #3	SZAC	24	453	0.160	139.9	ConstantVolume	NA	NA	NA	NA	NoEconomizer	N
Building D Suite #4	SZAC	24	453	0.160	139.9	ConstantVolume	NA	NA	NA	NA	NoEconomizer	N
Building D Suite #5	SZAC	24	453	0.160	139.9	ConstantVolume	NA	NA	NA	NA	NoEconomizer	N
Building D Suite #6	SZAC	24	453	0.160	139.9	ConstantVolume	NA	NA	NA	NA	NoEconomizer	N
Building D Suite #7	SZAC	24	453	0.160	139.9	ConstantVolume	NA	NA	NA	NA	NoEconomizer	N
Building D Suite #8	SZAC	24	453	0.160	139.9	ConstantVolume	NA	NA	NA	NA	NoEconomizer	N
Building D Suite #9	SZAC	24	453	0.160	139.9	ConstantVolume	NA	NA	NA	NA	NoEconomizer	N
Building D Suite #10	SZAC	24	453	0.160	139.9	ConstantVolume	NA	NA	NA	NA	NoEconomizer	N
Building D Suite #11	SZAC	24	453	0.160	139.9	ConstantVolume	NA	NA	NA	NA	NoEconomizer	N
Building D Suite #12	SZAC	24	453	0.160	139.9	ConstantVolume	NA	NA	NA	NA	NoEconomizer	N
Building D Suite #13	SZAC	24	453	0.160	139.9	ConstantVolume	NA	NA	NA	NA	NoEconomizer	N
Building D Suite #14	SZAC	24	453	0.160	139.9	ConstantVolume	NA	NA	NA	NA	NoEconomizer	N
Building D Suite #15	SZAC	24	453	0.160	139.9	ConstantVolume	NA	NA	NA	NA	NoEconomizer	N
Building D Suite #16	SZAC	24	453	0.160	139.9	ConstantVolume	NA	NA	NA	NA	NoEconomizer	N
Building D Suite #17	SZAC	24	453	0.160	139.9	ConstantVolume	NA	NA	NA	NA	NoEconomizer	N
Building D Suite #18	SZAC	24	453	0.160	139.9	ConstantVolume	NA	NA	NA	NA	NoEconomizer	N

Project Name:	Madera Industrial WHSE	NRCC-PRF-01-E	Page 15 of 33
Project Address:	S. Schnoor Avenue Madera	Calculation Date/Time:	10:23, Thu, Nov 18, 2021
Input File Name:	2020.264 Energy Calcs (2x4).cibd19x		

H2. FAN SYSTEMS SUMMARY[1]

1	2	3	4	5	6	7	8	9	10	11	12	13
Name or Item Tag	System Type	Design OA	Supply Fan				Return Fan				Economizer Type (if present)	Status[5]
	packaged, DOAS, etc.	CFM	CFM	BHP	Watts	Control	CFM	BHP	Watts	Control		
Building D Suite #19	SZAC	24	453	0.160	139.9	ConstantVolume	NA	NA	NA	NA	NoEconomizer	N

[1] Status: N - New, A – Altered, E – Existing

H3. EXHAUST FAN SUMMARY

This Section Does Not Apply

H4. Wet System Equipment (boilers, chillers, cooling towers, etc.)

1	2	3	4	5	6	7	8	9	10	11	12
Name or Item Tag	Equipment Type	Qty	Vol (gal)	Rated Capacity (kBtu/h)	Efficiency	Standby Loss	Pumps				Status[1]
							Qty	GPM	HP	VSD (Y/N)	

[1] Status: N - New, A – Altered, E – Existing

H5. SYSTEM SPECIAL FEATURES

1	2	3	4	5	6
System Name	Optimum Start	Window Interlocks per §140.4(n)	Evaporative Cooling	Heat Recovery	Other Controls
Building A Suite #1	No Optimum Start	NA	No Evaporative Cooler	No Heat Recovery	No DCV Controls, No DDC No Economizer No Supply Air Temp. Control
Building A Suite #2	No Optimum Start	NA	No Evaporative Cooler	No Heat Recovery	No DCV Controls, No DDC No Economizer No Supply Air Temp. Control
Building A Suite #3	No Optimum Start	NA	No Evaporative Cooler	No Heat Recovery	No DCV Controls, No DDC No Economizer No Supply Air Temp. Control
Building A Suite #4	No Optimum Start	NA	No Evaporative Cooler	No Heat Recovery	No DCV Controls, No DDC No Economizer No Supply Air Temp. Control

Project Name:	Madera Industrial WHSE	NRCC-PRF-01-E	Page 16 of 33
Project Address:	S. Schnoor Avenue Madera	Calculation Date/Time:	10:23, Thu, Nov 18, 2021
Input File Name:	2020.264 Energy Calcs (2x4).cibd19x		

H5. SYSTEM SPECIAL FEATURES

1	2	3	4	5	6
System Name	Optimum Start	Window Interlocks per §140.4(n)	Evaporative Cooling	Heat Recovery	Other Controls
Building A Suite #5	No Optimum Start	NA	No Evaporative Cooler	No Heat Recovery	No DCV Controls, No DDC No Economizer No Supply Air Temp. Control
Building A Suite #6	No Optimum Start	NA	No Evaporative Cooler	No Heat Recovery	No DCV Controls, No DDC No Economizer No Supply Air Temp. Control
Building A Suite #7	No Optimum Start	NA	No Evaporative Cooler	No Heat Recovery	No DCV Controls, No DDC No Economizer No Supply Air Temp. Control
Building A Suite #8	No Optimum Start	NA	No Evaporative Cooler	No Heat Recovery	No DCV Controls, No DDC No Economizer No Supply Air Temp. Control
Building A Suite #9	No Optimum Start	NA	No Evaporative Cooler	No Heat Recovery	No DCV Controls, No DDC No Economizer No Supply Air Temp. Control
Building A Suite #10	No Optimum Start	NA	No Evaporative Cooler	No Heat Recovery	No DCV Controls, No DDC No Economizer No Supply Air Temp. Control
Building A Suite #11	No Optimum Start	NA	No Evaporative Cooler	No Heat Recovery	No DCV Controls, No DDC No Economizer No Supply Air Temp. Control
Building A Suite #12	No Optimum Start	NA	No Evaporative Cooler	No Heat Recovery	No DCV Controls, No DDC No Economizer No Supply Air Temp. Control
Building A Suite #13	No Optimum Start	NA	No Evaporative Cooler	No Heat Recovery	No DCV Controls, No DDC No Economizer No Supply Air Temp. Control
Building A Suite #14	No Optimum Start	NA	No Evaporative Cooler	No Heat Recovery	No DCV Controls, No DDC No Economizer No Supply Air Temp. Control
Building A Suite #15	No Optimum Start	NA	No Evaporative Cooler	No Heat Recovery	No DCV Controls, No DDC No Economizer No Supply Air Temp. Control

Project Name:	Madera Industrial WHSE	NRCC-PRF-01-E	Page 17 of 33
Project Address:	S. Schnoor Avenue Madera	Calculation Date/Time:	10:23, Thu, Nov 18, 2021
Input File Name:	2020.264 Energy Calcs (2x4).cibd19x		

H5. SYSTEM SPECIAL FEATURES

1	2	3	4	5	6
System Name	Optimum Start	Window Interlocks per §140.4(n)	Evaporative Cooling	Heat Recovery	Other Controls
Building A Suite #16	No Optimum Start	NA	No Evaporative Cooler	No Heat Recovery	No DCV Controls, No DDC No Economizer No Supply Air Temp. Control
Building A Suite #17	No Optimum Start	NA	No Evaporative Cooler	No Heat Recovery	No DCV Controls, No DDC No Economizer No Supply Air Temp. Control
Building A Suite #18	No Optimum Start	NA	No Evaporative Cooler	No Heat Recovery	No DCV Controls, No DDC No Economizer No Supply Air Temp. Control
Building A Suite #19	No Optimum Start	NA	No Evaporative Cooler	No Heat Recovery	No DCV Controls, No DDC No Economizer No Supply Air Temp. Control
Building B Suite #1	No Optimum Start	NA	No Evaporative Cooler	No Heat Recovery	No DCV Controls, No DDC No Economizer No Supply Air Temp. Control
Building B Suite #2	No Optimum Start	NA	No Evaporative Cooler	No Heat Recovery	No DCV Controls, No DDC No Economizer No Supply Air Temp. Control
Building B Suite #3	No Optimum Start	NA	No Evaporative Cooler	No Heat Recovery	No DCV Controls, No DDC No Economizer No Supply Air Temp. Control
Building B Suite #4	No Optimum Start	NA	No Evaporative Cooler	No Heat Recovery	No DCV Controls, No DDC No Economizer No Supply Air Temp. Control
Building B Suite #5	No Optimum Start	NA	No Evaporative Cooler	No Heat Recovery	No DCV Controls, No DDC No Economizer No Supply Air Temp. Control
Building B Suite #6	No Optimum Start	NA	No Evaporative Cooler	No Heat Recovery	No DCV Controls, No DDC No Economizer No Supply Air Temp. Control
Building B Suite #7	No Optimum Start	NA	No Evaporative Cooler	No Heat Recovery	No DCV Controls, No DDC No Economizer No Supply Air Temp. Control

Project Name:	Madera Industrial WHSE	NRCC-PRF-01-E	Page 18 of 33
Project Address:	S. Schnoor Avenue Madera	Calculation Date/Time:	10:23, Thu, Nov 18, 2021
Input File Name:	2020.264 Energy Calcs (2x4).cibd19x		

H5. SYSTEM SPECIAL FEATURES

1	2	3	4	5	6
System Name	Optimum Start	Window Interlocks per §140.4(n)	Evaporative Cooling	Heat Recovery	Other Controls
Building B Suite #8	No Optimum Start	NA	No Evaporative Cooler	No Heat Recovery	No DCV Controls, No DDC No Economizer No Supply Air Temp. Control
Building B Suite #9	No Optimum Start	NA	No Evaporative Cooler	No Heat Recovery	No DCV Controls, No DDC No Economizer No Supply Air Temp. Control
Building B Suite #10	No Optimum Start	NA	No Evaporative Cooler	No Heat Recovery	No DCV Controls, No DDC No Economizer No Supply Air Temp. Control
Building B Suite #11	No Optimum Start	NA	No Evaporative Cooler	No Heat Recovery	No DCV Controls, No DDC No Economizer No Supply Air Temp. Control
Building B Suite #12	No Optimum Start	NA	No Evaporative Cooler	No Heat Recovery	No DCV Controls, No DDC No Economizer No Supply Air Temp. Control
Building B Suite #13	No Optimum Start	NA	No Evaporative Cooler	No Heat Recovery	No DCV Controls, No DDC No Economizer No Supply Air Temp. Control
Building B Suite #14	No Optimum Start	NA	No Evaporative Cooler	No Heat Recovery	No DCV Controls, No DDC No Economizer No Supply Air Temp. Control
Building B Suite #15	No Optimum Start	NA	No Evaporative Cooler	No Heat Recovery	No DCV Controls, No DDC No Economizer No Supply Air Temp. Control
Building B Suite #16	No Optimum Start	NA	No Evaporative Cooler	No Heat Recovery	No DCV Controls, No DDC No Economizer No Supply Air Temp. Control
Building B Suite #17	No Optimum Start	NA	No Evaporative Cooler	No Heat Recovery	No DCV Controls, No DDC No Economizer No Supply Air Temp. Control
Building B Suite #18	No Optimum Start	NA	No Evaporative Cooler	No Heat Recovery	No DCV Controls, No DDC No Economizer No Supply Air Temp. Control

Project Name:	Madera Industrial WHSE	NRCC-PRF-01-E	Page 19 of 33
Project Address:	S. Schnoor Avenue Madera	Calculation Date/Time:	10:23, Thu, Nov 18, 2021
Input File Name:	2020.264 Energy Calcs (2x4).cibd19x		

H5. SYSTEM SPECIAL FEATURES

1	2	3	4	5	6
System Name	Optimum Start	Window Interlocks per §140.4(n)	Evaporative Cooling	Heat Recovery	Other Controls
Building B Suite #19	No Optimum Start	NA	No Evaporative Cooler	No Heat Recovery	No DCV Controls, No DDC No Economizer No Supply Air Temp. Control
Building C Suite #1	No Optimum Start	NA	No Evaporative Cooler	No Heat Recovery	No DCV Controls, No DDC No Economizer No Supply Air Temp. Control
Building C Suite #2	No Optimum Start	NA	No Evaporative Cooler	No Heat Recovery	No DCV Controls, No DDC No Economizer No Supply Air Temp. Control
Building C Suite #3	No Optimum Start	NA	No Evaporative Cooler	No Heat Recovery	No DCV Controls, No DDC No Economizer No Supply Air Temp. Control
Building C Suite #4	No Optimum Start	NA	No Evaporative Cooler	No Heat Recovery	No DCV Controls, No DDC No Economizer No Supply Air Temp. Control
Building C Suite #5	No Optimum Start	NA	No Evaporative Cooler	No Heat Recovery	No DCV Controls, No DDC No Economizer No Supply Air Temp. Control
Building C Suite #6	No Optimum Start	NA	No Evaporative Cooler	No Heat Recovery	No DCV Controls, No DDC No Economizer No Supply Air Temp. Control
Building C Suite #7	No Optimum Start	NA	No Evaporative Cooler	No Heat Recovery	No DCV Controls, No DDC No Economizer No Supply Air Temp. Control
Building C Suite #8	No Optimum Start	NA	No Evaporative Cooler	No Heat Recovery	No DCV Controls, No DDC No Economizer No Supply Air Temp. Control
Building C Suite #9	No Optimum Start	NA	No Evaporative Cooler	No Heat Recovery	No DCV Controls, No DDC No Economizer No Supply Air Temp. Control
Building C Suite #10	No Optimum Start	NA	No Evaporative Cooler	No Heat Recovery	No DCV Controls, No DDC No Economizer No Supply Air Temp. Control

Project Name:	Madera Industrial WHSE	NRCC-PRF-01-E	Page 20 of 33
Project Address:	S. Schnoor Avenue Madera	Calculation Date/Time:	10:23, Thu, Nov 18, 2021
Input File Name:	2020.264 Energy Calcs (2x4).cibd19x		

H5. SYSTEM SPECIAL FEATURES

1	2	3	4	5	6
System Name	Optimum Start	Window Interlocks per §140.4(n)	Evaporative Cooling	Heat Recovery	Other Controls
Building C Suite #11	No Optimum Start	NA	No Evaporative Cooler	No Heat Recovery	No DCV Controls, No DDC No Economizer No Supply Air Temp. Control
Building C Suite #12	No Optimum Start	NA	No Evaporative Cooler	No Heat Recovery	No DCV Controls, No DDC No Economizer No Supply Air Temp. Control
Building C Suite #13	No Optimum Start	NA	No Evaporative Cooler	No Heat Recovery	No DCV Controls, No DDC No Economizer No Supply Air Temp. Control
Building C Suite #14	No Optimum Start	NA	No Evaporative Cooler	No Heat Recovery	No DCV Controls, No DDC No Economizer No Supply Air Temp. Control
Building C Suite #15	No Optimum Start	NA	No Evaporative Cooler	No Heat Recovery	No DCV Controls, No DDC No Economizer No Supply Air Temp. Control
Building C Suite #16	No Optimum Start	NA	No Evaporative Cooler	No Heat Recovery	No DCV Controls, No DDC No Economizer No Supply Air Temp. Control
Building C Suite #17	No Optimum Start	NA	No Evaporative Cooler	No Heat Recovery	No DCV Controls, No DDC No Economizer No Supply Air Temp. Control
Building C Suite #18	No Optimum Start	NA	No Evaporative Cooler	No Heat Recovery	No DCV Controls, No DDC No Economizer No Supply Air Temp. Control
Building C Suite #19	No Optimum Start	NA	No Evaporative Cooler	No Heat Recovery	No DCV Controls, No DDC No Economizer No Supply Air Temp. Control
Building D Suite #1	No Optimum Start	NA	No Evaporative Cooler	No Heat Recovery	No DCV Controls, No DDC No Economizer No Supply Air Temp. Control
Building D Suite #2	No Optimum Start	NA	No Evaporative Cooler	No Heat Recovery	No DCV Controls, No DDC No Economizer No Supply Air Temp. Control

Project Name:	Madera Industrial WHSE	NRCC-PRF-01-E	Page 21 of 33
Project Address:	S. Schnoor Avenue Madera	Calculation Date/Time:	10:23, Thu, Nov 18, 2021
Input File Name:	2020.264 Energy Calcs (2x4).cibd19x		

H5. SYSTEM SPECIAL FEATURES

1	2	3	4	5	6
System Name	Optimum Start	Window Interlocks per §140.4(n)	Evaporative Cooling	Heat Recovery	Other Controls
Building D Suite #3	No Optimum Start	NA	No Evaporative Cooler	No Heat Recovery	No DCV Controls, No DDC No Economizer No Supply Air Temp. Control
Building D Suite #4	No Optimum Start	NA	No Evaporative Cooler	No Heat Recovery	No DCV Controls, No DDC No Economizer No Supply Air Temp. Control
Building D Suite #5	No Optimum Start	NA	No Evaporative Cooler	No Heat Recovery	No DCV Controls, No DDC No Economizer No Supply Air Temp. Control
Building D Suite #6	No Optimum Start	NA	No Evaporative Cooler	No Heat Recovery	No DCV Controls, No DDC No Economizer No Supply Air Temp. Control
Building D Suite #7	No Optimum Start	NA	No Evaporative Cooler	No Heat Recovery	No DCV Controls, No DDC No Economizer No Supply Air Temp. Control
Building D Suite #8	No Optimum Start	NA	No Evaporative Cooler	No Heat Recovery	No DCV Controls, No DDC No Economizer No Supply Air Temp. Control
Building D Suite #9	No Optimum Start	NA	No Evaporative Cooler	No Heat Recovery	No DCV Controls, No DDC No Economizer No Supply Air Temp. Control
Building D Suite #10	No Optimum Start	NA	No Evaporative Cooler	No Heat Recovery	No DCV Controls, No DDC No Economizer No Supply Air Temp. Control
Building D Suite #11	No Optimum Start	NA	No Evaporative Cooler	No Heat Recovery	No DCV Controls, No DDC No Economizer No Supply Air Temp. Control
Building D Suite #12	No Optimum Start	NA	No Evaporative Cooler	No Heat Recovery	No DCV Controls, No DDC No Economizer No Supply Air Temp. Control
Building D Suite #13	No Optimum Start	NA	No Evaporative Cooler	No Heat Recovery	No DCV Controls, No DDC No Economizer No Supply Air Temp. Control

Project Name:	Madera Industrial WHSE	NRCC-PRF-01-E	Page 22 of 33
Project Address:	S. Schnoor Avenue Madera	Calculation Date/Time:	10:23, Thu, Nov 18, 2021
Input File Name:	2020.264 Energy Calcs (2x4).cibd19x		

H5. SYSTEM SPECIAL FEATURES

1	2	3	4	5	6
System Name	Optimum Start	Window Interlocks per §140.4(n)	Evaporative Cooling	Heat Recovery	Other Controls
Building D Suite #14	No Optimum Start	NA	No Evaporative Cooler	No Heat Recovery	No DCV Controls, No DDC No Economizer No Supply Air Temp. Control
Building D Suite #15	No Optimum Start	NA	No Evaporative Cooler	No Heat Recovery	No DCV Controls, No DDC No Economizer No Supply Air Temp. Control
Building D Suite #16	No Optimum Start	NA	No Evaporative Cooler	No Heat Recovery	No DCV Controls, No DDC No Economizer No Supply Air Temp. Control
Building D Suite #17	No Optimum Start	NA	No Evaporative Cooler	No Heat Recovery	No DCV Controls, No DDC No Economizer No Supply Air Temp. Control
Building D Suite #18	No Optimum Start	NA	No Evaporative Cooler	No Heat Recovery	No DCV Controls, No DDC No Economizer No Supply Air Temp. Control
Building D Suite #19	No Optimum Start	NA	No Evaporative Cooler	No Heat Recovery	No DCV Controls, No DDC No Economizer No Supply Air Temp. Control
Building A1 - SHW	NA	NA	NA	NA	Fixed Temperature Control, No DDC
Building B480 - SHW	NA	NA	NA	NA	Fixed Temperature Control, No DDC
Building C937 - SHW	NA	NA	NA	NA	Fixed Temperature Control, No DDC
Building D1394 - SHW	NA	NA	NA	NA	Fixed Temperature Control, No DDC

Notes: This table includes controls related to the performance path only. For projects using the prescriptive path, mandatory and prescriptive controls requirements are documented on the NRCC-MCH-E.

H6. MECHANICAL VENTILATION

1	2	3	4	5	6	7	8	9
Zone Name	Mechanical Ventilation							DCV or Occupant Sensor Controls, or Both
	Ventilation Function	# hotel rooms	# of people	# of bedrooms	Supply OA CFM	Exhaust CFM	Conditioned Area (sf)	
1-Office A-1	Office - Office space	0	0.79	0	24	0	159	NA

Project Name:	Madera Industrial WHSE	NRCC-PRF-01-E	Page 23 of 33
Project Address:	S. Schnoor Avenue Madera	Calculation Date/Time:	10:23, Thu, Nov 18, 2021
Input File Name:	2020.264 Energy Calcs (2x4).cibd19x		

H6. MECHANICAL VENTILATION

1	2	3	4	5	6	7	8	9
Zone Name	Mechanical Ventilation							DCV or Occupant Sensor Controls, or Both
	Ventilation Function	# hotel rooms	# of people	# of bedrooms	Supply OA CFM	Exhaust CFM	Conditioned Area (sf)	
4-Office A-2	Office - Office space	0	0.79	0	24	0	159	NA
7-Office A-3	Office - Office space	0	0.79	0	24	0	159	NA
10-Office A-4	Office - Office space	0	0.79	0	24	0	159	NA
13-Office A-5	Office - Office space	0	0.79	0	24	0	159	NA
16-Office A-6	Office - Office space	0	0.79	0	24	0	159	NA
19-Office A-7	Office - Office space	0	0.79	0	24	0	159	NA
22-Office A-8	Office - Office space	0	0.79	0	24	0	159	NA
25-Office A-9	Office - Office space	0	0.79	0	24	0	159	NA
28-Office A-10	Office - Office space	0	0.79	0	24	0	159	NA
31-Office A-11	Office - Office space	0	0.79	0	24	0	159	NA
34-Office A-12	Office - Office space	0	0.79	0	24	0	159	NA
37-Office A-13	Office - Office space	0	0.79	0	24	0	159	NA
40-Office A-14	Office - Office space	0	0.79	0	24	0	159	NA
43-Office A-15	Office - Office space	0	0.79	0	24	0	159	NA
46-Office A-16	Office - Office space	0	0.79	0	24	0	159	NA
49-Office A-17	Office - Office space	0	0.79	0	24	0	159	NA
52-Office A-18	Office - Office space	0	0.79	0	24	0	159	NA
55-Office A-19	Office - Office space	0	0.79	0	24	0	159	NA
58-Office B-1	Office - Office space	0	0.79	0	24	0	159	NA
61-Office B-2	Office - Office space	0	0.79	0	24	0	159	NA
64-Office B-3	Office - Office space	0	0.79	0	24	0	159	NA
67-Office B-4	Office - Office space	0	0.79	0	24	0	159	NA
70-Office B-5	Office - Office space	0	0.79	0	24	0	159	NA
73-Office B-6	Office - Office space	0	0.79	0	24	0	159	NA
76-Office B-7	Office - Office space	0	0.79	0	24	0	159	NA

Project Name:	Madera Industrial WHSE	NRCC-PRF-01-E	Page 24 of 33
Project Address:	S. Schnoor Avenue Madera	Calculation Date/Time:	10:23, Thu, Nov 18, 2021
Input File Name:	2020.264 Energy Calcs (2x4).cibd19x		

H6. MECHANICAL VENTILATION

1	2	3	4	5	6	7	8	9
Zone Name	Mechanical Ventilation							DCV or Occupant Sensor Controls, or Both
	Ventilation Function	# hotel rooms	# of people	# of bedrooms	Supply OA CFM	Exhaust CFM	Conditioned Area (sf)	
79-Office B-8	Office - Office space	0	0.79	0	24	0	159	NA
82-Office B-9	Office - Office space	0	0.79	0	24	0	159	NA
85-Office B-10	Office - Office space	0	0.79	0	24	0	159	NA
88-Office B-11	Office - Office space	0	0.79	0	24	0	159	NA
91-Office B-12	Office - Office space	0	0.79	0	24	0	159	NA
94-Office B-13	Office - Office space	0	0.79	0	24	0	159	NA
97-Office B-14	Office - Office space	0	0.79	0	24	0	159	NA
100-Office B-15	Office - Office space	0	0.79	0	24	0	159	NA
103-Office B-16	Office - Office space	0	0.79	0	24	0	159	NA
106-Office B-17	Office - Office space	0	0.79	0	24	0	159	NA
109-Office B-18	Office - Office space	0	0.79	0	24	0	159	NA
112-Office B-19	Office - Office space	0	0.79	0	24	0	159	NA
115-Office C-1	Office - Office space	0	0.79	0	24	0	159	NA
118-Office C-2	Office - Office space	0	0.79	0	24	0	159	NA
121-Office C-3	Office - Office space	0	0.79	0	24	0	159	NA
124-Office C-4	Office - Office space	0	0.79	0	24	0	159	NA
127-Office C-5	Office - Office space	0	0.79	0	24	0	159	NA
130-Office C-6	Office - Office space	0	0.79	0	24	0	159	NA
133-Office C-7	Office - Office space	0	0.79	0	24	0	159	NA
136-Office C-8	Office - Office space	0	0.79	0	24	0	159	NA
139-Office C-9	Office - Office space	0	0.79	0	24	0	159	NA
142-Office C-10	Office - Office space	0	0.79	0	24	0	159	NA
145-Office C-11	Office - Office space	0	0.79	0	24	0	159	NA
148-Office C-12	Office - Office space	0	0.79	0	24	0	159	NA
151-Office C-13	Office - Office space	0	0.79	0	24	0	159	NA

2019CBC
City of Madera
Building Department
The approval of these plans does not prevent the City of Madera from requiring correction of errors or omissions in the plans, specifications or construction. Subject to field inspections and approvals. Laws, Codes and Ordinances
APPROVED
By:
Date: MAR 03 2022
2019CBC

These plans or drawings or any part of these publications are the exclusive propery of VAR, and may not be reproduced, or transmitted in any form or by means, recording, electronic, mechanical, photocoping or otherwise without written permission by VAR. Copies of these drawings are supplied to the owner or the Building contractor and, otherwise for the use of this project only. Any Re-use of these drawings or documents is prohibited without the written permission of VAR. If VAR is not awarded the project, VAR will not warranty these plans, drawings or contents and will not assume any liability or responsibility for the unauthorized use of these plans or drawings, and the plans or drawings and contents must be returned to VAR immediately.

VAR
Since 1970
825 S Topeka Ave
Fresno CA, 93721
559-237-3188

Valley Air Conditioning & Repair, Inc.
VAR
Since 1970

50 Years of Indoor comfort.

Air Conditioning & Heating
Custom Sheet Metal
Sales & Service

Signed Steve Mendrin Date 11-18-21
Steve Mendrin
License #689606
Valley Air Conditioning & Repair.

BY	REVISION	DATE

SEAL

ANY INFORMATION OR DATA ON THIS DRAWING IS NOT INTENDED TO BE SUITABLE FOR REUSE BY ANY PERSON, FIRM, CORPORATION, OR ANY OTHERS ON EXTENSIONS OF THIS PROJECT OR FOR ANY USE ON ANY OTHER PROJECT. ANY REUSE WITHOUT WRITTEN VERIFICATION AND ADAPTATION BY THE ENGINEER FOR THE SPECIFIC PURPOSE INTENDED WILL BE AT THE USER'S SOLE RISK AND WITHOUT LIABILITY OR LEGAL EXPOSURE TO THE ENGINEER.

TYPICAL MECHANICAL FLOOR PLAN

LEASE FLEX. / WAREHOUSE BUILDINGS

FOR

MADERA INDUSTRIAL WHSE, LLC

S. SCHNOOR AVENUE, MADERA, CA

JOB NUMBER 21107

DESIGNED BY

DRAWN BY

DATE 9/09/2021

SHEET NUMBER M4

Project Name:	Madera Industrial WHSE	NRCC-PRF-01-E	Page 25 of 33
Project Address:	S. Schnoor Avenue Madera	Calculation Date/Time:	10:23, Thu, Nov 18, 2021
Input File Name:	2020.264 Energy Calcs (2x4).cibd19x		

H6. MECHANICAL VENTILATION

1	2	3	4	5	6	7	8	9
Zone Name	Mechanical Ventilation							DCV or Occupant Sensor Controls, or Both
	Ventilation Function	# hotel rooms	# of people	# of bedrooms	Supply OA CFM	Exhaust CFM	Conditioned Area (sf)	
154-Office C-14	Office - Office space	0	0.79	0	24	0	159	NA
157-Office C-15	Office - Office space	0	0.79	0	24	0	159	NA
160-Office C-16	Office - Office space	0	0.79	0	24	0	159	NA
163-Office C-17	Office - Office space	0	0.79	0	24	0	159	NA
166-Office C-18	Office - Office space	0	0.79	0	24	0	159	NA
169-Office C-19	Office - Office space	0	0.79	0	24	0	159	NA
172-Office D-1	Office - Office space	0	0.79	0	24	0	159	NA
175-Office D-2	Office - Office space	0	0.79	0	24	0	159	NA
178-Office D-3	Office - Office space	0	0.79	0	24	0	159	NA
181-Office D-4	Office - Office space	0	0.79	0	24	0	159	NA
184-Office D-5	Office - Office space	0	0.79	0	24	0	159	NA
187-Office D-6	Office - Office space	0	0.79	0	24	0	159	NA
190-Office D-7	Office - Office space	0	0.79	0	24	0	159	NA
193-Office D-8	Office - Office space	0	0.79	0	24	0	159	NA
196-Office D-9	Office - Office space	0	0.79	0	24	0	159	NA
199-Office D-10	Office - Office space	0	0.79	0	24	0	159	NA
202-Office D-11	Office - Office space	0	0.79	0	24	0	159	NA
205-Office D-12	Office - Office space	0	0.79	0	24	0	159	NA
208-Office D-13	Office - Office space	0	0.79	0	24	0	159	NA
211-Office D-14	Office - Office space	0	0.79	0	24	0	159	NA
214-Office D-15	Office - Office space	0	0.79	0	24	0	159	NA
217-Office D-16	Office - Office space	0	0.79	0	24	0	159	NA
220-Office D-17	Office - Office space	0	0.79	0	24	0	159	NA
223-Office D-18	Office - Office space	0	0.79	0	24	0	159	NA
226-Office D-19	Office - Office space	0	0.79	0	24	0	159	NA

Project Name:	Madera Industrial WHSE	NRCC-PRF-01-E	Page 26 of 33
Project Address:	S. Schnoor Avenue Madera	Calculation Date/Time:	10:23, Thu, Nov 18, 2021
Input File Name:	2020.264 Energy Calcs (2x4).cibd19x		

Multifamily or Hotel/Motel Occupancy? (if "Yes", see DOMESTIC/SERVICE HOT WATER SYSTEM SUMMARY)	No
Does the Project include Zonal Systems?	Yes

H7. ZONAL SYSTEM AND TERMINAL UNIT SUMMARY

1	2	3	4	5	6	7	8	9	10	11	12
System ID	Zone Name	System Type	Rated Capacity (kBtuh)		Airflow (cfm)			Fan			
			Heating	Cooling	Design	Min.	Min. Ratio	BHP	Watts	Cycles	ECM Motor
1-Office A-1-Trm	1-Office A-1	Uncontrolled	NA	NA	453	NA	0.00	NA	NA	NA	☐
4-Office A-2-Trm	4-Office A-2	Uncontrolled	NA	NA	453	NA	0.00	NA	NA	NA	☐
7-Office A-3-Trm	7-Office A-3	Uncontrolled	NA	NA	453	NA	0.00	NA	NA	NA	☐
10-Office A-4-Trm	10-Office A-4	Uncontrolled	NA	NA	453	NA	0.00	NA	NA	NA	☐
13-Office A-5-Trm	13-Office A-5	Uncontrolled	NA	NA	453	NA	0.00	NA	NA	NA	☐
16-Office A-6-Trm	16-Office A-6	Uncontrolled	NA	NA	453	NA	0.00	NA	NA	NA	☐
19-Office A-7-Trm	19-Office A-7	Uncontrolled	NA	NA	453	NA	0.00	NA	NA	NA	☐
22-Office A-8-Trm	22-Office A-8	Uncontrolled	NA	NA	453	NA	0.00	NA	NA	NA	☐
25-Office A-9-Trm	25-Office A-9	Uncontrolled	NA	NA	453	NA	0.00	NA	NA	NA	☐
28-Office A-10-Trm	28-Office A-10	Uncontrolled	NA	NA	453	NA	0.00	NA	NA	NA	☐
31-Office A-11-Trm	31-Office A-11	Uncontrolled	NA	NA	453	NA	0.00	NA	NA	NA	☐
34-Office A-12-Trm	34-Office A-12	Uncontrolled	NA	NA	453	NA	0.00	NA	NA	NA	☐
37-Office A-13-Trm	37-Office A-13	Uncontrolled	NA	NA	453	NA	0.00	NA	NA	NA	☐
40-Office A-14-Trm	40-Office A-14	Uncontrolled	NA	NA	453	NA	0.00	NA	NA	NA	☐
43-Office A-15-Trm	43-Office A-15	Uncontrolled	NA	NA	453	NA	0.00	NA	NA	NA	☐
46-Office A-16-Trm	46-Office A-16	Uncontrolled	NA	NA	453	NA	0.00	NA	NA	NA	☐
49-Office A-17-Trm	49-Office A-17	Uncontrolled	NA	NA	453	NA	0.00	NA	NA	NA	☐
52-Office A-18-Trm	52-Office A-18	Uncontrolled	NA	NA	453	NA	0.00	NA	NA	NA	☐
55-Office A-19-Trm	55-Office A-19	Uncontrolled	NA	NA	453	NA	0.00	NA	NA	NA	☐
58-Office B-1-Trm	58-Office B-1	Uncontrolled	NA	NA	453	NA	0.00	NA	NA	NA	☐

Project Name:	Madera Industrial WHSE	NRCC-PRF-01-E	Page 27 of 33
Project Address:	S. Schnoor Avenue Madera	Calculation Date/Time:	10:23, Thu, Nov 18, 2021
Input File Name:	2020.264 Energy Calcs (2x4).cibd19x		

H7. ZONAL SYSTEM AND TERMINAL UNIT SUMMARY

1	2	3	4	5	6	7	8	9	10	11	12
System ID	Zone Name	System Type	Rated Capacity (kBtuh)		Airflow (cfm)			Fan			
			Heating	Cooling	Design	Min.	Min. Ratio	BHP	Watts	Cycles	ECM Motor
61-Office B-2-Trm	61-Office B-2	Uncontrolled	NA	NA	453	NA	0.00	NA	NA	NA	☐
64-Office B-3-Trm	64-Office B-3	Uncontrolled	NA	NA	453	NA	0.00	NA	NA	NA	☐
67-Office B-4-Trm	67-Office B-4	Uncontrolled	NA	NA	453	NA	0.00	NA	NA	NA	☐
70-Office B-5-Trm	70-Office B-5	Uncontrolled	NA	NA	453	NA	0.00	NA	NA	NA	☐
73-Office B-6-Trm	73-Office B-6	Uncontrolled	NA	NA	453	NA	0.00	NA	NA	NA	☐
76-Office B-7-Trm	76-Office B-7	Uncontrolled	NA	NA	453	NA	0.00	NA	NA	NA	☐
79-Office B-8-Trm	79-Office B-8	Uncontrolled	NA	NA	453	NA	0.00	NA	NA	NA	☐
82-Office B-9-Trm	82-Office B-9	Uncontrolled	NA	NA	453	NA	0.00	NA	NA	NA	☐
85-Office B-10-Trm	85-Office B-10	Uncontrolled	NA	NA	453	NA	0.00	NA	NA	NA	☐
88-Office B-11-Trm	88-Office B-11	Uncontrolled	NA	NA	453	NA	0.00	NA	NA	NA	☐
91-Office B-12-Trm	91-Office B-12	Uncontrolled	NA	NA	453	NA	0.00	NA	NA	NA	☐
94-Office B-13-Trm	94-Office B-13	Uncontrolled	NA	NA	453	NA	0.00	NA	NA	NA	☐
97-Office B-14-Trm	97-Office B-14	Uncontrolled	NA	NA	453	NA	0.00	NA	NA	NA	☐
100-Office B-15-Trm	100-Office B-15	Uncontrolled	NA	NA	453	NA	0.00	NA	NA	NA	☐
103-Office B-16-Trm	103-Office B-16	Uncontrolled	NA	NA	453	NA	0.00	NA	NA	NA	☐
106-Office B-17-Trm	106-Office B-17	Uncontrolled	NA	NA	453	NA	0.00	NA	NA	NA	☐
109-Office B-18-Trm	109-Office B-18	Uncontrolled	NA	NA	453	NA	0.00	NA	NA	NA	☐
112-Office B-19-Trm	112-Office B-19	Uncontrolled	NA	NA	453	NA	0.00	NA	NA	NA	☐
115-Office C-1-Trm	115-Office C-1	Uncontrolled	NA	NA	453	NA	0.00	NA	NA	NA	☐
118-Office C-2-Trm	118-Office C-2	Uncontrolled	NA	NA	453	NA	0.00	NA	NA	NA	☐
121-Office C-3-Trm	121-Office C-3	Uncontrolled	NA	NA	453	NA	0.00	NA	NA	NA	☐
124-Office C-4-Trm	124-Office C-4	Uncontrolled	NA	NA	453	NA	0.00	NA	NA	NA	☐
127-Office C-5-Trm	127-Office C-5	Uncontrolled	NA	NA	453	NA	0.00	NA	NA	NA	☐
130-Office C-6-Trm	130-Office C-6	Uncontrolled	NA	NA	453	NA	0.00	NA	NA	NA	☐

Project Name:	Madera Industrial WHSE	NRCC-PRF-01-E	Page 28 of 33
Project Address:	S. Schnoor Avenue Madera	Calculation Date/Time:	10:23, Thu, Nov 18, 2021
Input File Name:	2020.264 Energy Calcs (2x4).cibd19x		

H7. ZONAL SYSTEM AND TERMINAL UNIT SUMMARY

1	2	3	4	5	6	7	8	9	10	11	12
System ID	Zone Name	System Type	Rated Capacity (kBtuh)		Airflow (cfm)			Fan			
			Heating	Cooling	Design	Min.	Min. Ratio	BHP	Watts	Cycles	ECM Motor
133-Office C-7-Trm	133-Office C-7	Uncontrolled	NA	NA	453	NA	0.00	NA	NA	NA	☐
136-Office C-8-Trm	136-Office C-8	Uncontrolled	NA	NA	453	NA	0.00	NA	NA	NA	☐
139-Office C-9-Trm	139-Office C-9	Uncontrolled	NA	NA	453	NA	0.00	NA	NA	NA	☐
142-Office C-10-Trm	142-Office C-10	Uncontrolled	NA	NA	453	NA	0.00	NA	NA	NA	☐
145-Office C-11-Trm	145-Office C-11	Uncontrolled	NA	NA	453	NA	0.00	NA	NA	NA	☐
148-Office C-12-Trm	148-Office C-12	Uncontrolled	NA	NA	453	NA	0.00	NA	NA	NA	☐
151-Office C-13-Trm	151-Office C-13	Uncontrolled	NA	NA	453	NA	0.00	NA	NA	NA	☐
154-Office C-14-Trm	154-Office C-14	Uncontrolled	NA	NA	453	NA	0.00	NA	NA	NA	☐
157-Office C-15-Trm	157-Office C-15	Uncontrolled	NA	NA	453	NA	0.00	NA	NA	NA	☐
160-Office C-16-Trm	160-Office C-16	Uncontrolled	NA	NA	453	NA	0.00	NA	NA	NA	☐
163-Office C-17-Trm	163-Office C-17	Uncontrolled	NA	NA	453	NA	0.00	NA	NA	NA	☐
166-Office C-18-Trm	166-Office C-18	Uncontrolled	NA	NA	453	NA	0.00	NA	NA	NA	☐
169-Office C-19-Trm	169-Office C-19	Uncontrolled	NA	NA	453	NA	0.00	NA	NA	NA	☐
172-Office D-1-Trm	172-Office D-1	Uncontrolled	NA	NA	453	NA	0.00	NA	NA	NA	☐
175-Office D-2-Trm	175-Office D-2	Uncontrolled	NA	NA	453	NA	0.00	NA	NA	NA	☐
178-Office D-3-Trm	178-Office D-3	Uncontrolled	NA	NA	453	NA	0.00	NA	NA	NA	☐
181-Office D-4-Trm	181-Office D-4	Uncontrolled	NA	NA	453	NA	0.00	NA	NA	NA	☐
184-Office D-5-Trm	184-Office D-5	Uncontrolled	NA	NA	453	NA	0.00	NA	NA	NA	☐
187-Office D-6-Trm	187-Office D-6	Uncontrolled	NA	NA	453	NA	0.00	NA	NA	NA	☐
190-Office D-7-Trm	190-Office D-7	Uncontrolled	NA	NA	453	NA	0.00	NA	NA	NA	☐
193-Office D-8-Trm	193-Office D-8	Uncontrolled	NA	NA	453	NA	0.00	NA	NA	NA	☐
196-Office D-9-Trm	196-Office D-9	Uncontrolled	NA	NA	453	NA	0.00	NA	NA	NA	☐
199-Office D-10-Trm	199-Office D-10	Uncontrolled	NA	NA	453	NA	0.00	NA	NA	NA	☐
202-Office D-11-Trm	202-Office D-11	Uncontrolled	NA	NA	453	NA	0.00	NA	NA	NA	☐

Project Name:	Madera Industrial WHSE	NRCC-PRF-01-E	Page 29 of 33
Project Address:	S. Schnoor Avenue Madera	Calculation Date/Time:	10:23, Thu, Nov 18, 2021
Input File Name:	2020.264 Energy Calcs (2x4).cibd19x		

H7. ZONAL SYSTEM AND TERMINAL UNIT SUMMARY

1	2	3	4	5	6	7	8	9	10	11	12
System ID	Zone Name	System Type	Rated Capacity (kBtuh)		Airflow (cfm)			Fan			
			Heating	Cooling	Design	Min.	Min. Ratio	BHP	Watts	Cycles	ECM Motor
205-Office D-12-Trm	205-Office D-12	Uncontrolled	NA	NA	453	NA	0.00	NA	NA	NA	☐
208-Office D-13-Trm	208-Office D-13	Uncontrolled	NA	NA	453	NA	0.00	NA	NA	NA	☐
211-Office D-14-Trm	211-Office D-14	Uncontrolled	NA	NA	453	NA	0.00	NA	NA	NA	☐
214-Office D-15-Trm	214-Office D-15	Uncontrolled	NA	NA	453	NA	0.00	NA	NA	NA	☐
217-Office D-16-Trm	217-Office D-16	Uncontrolled	NA	NA	453	NA	0.00	NA	NA	NA	☐
220-Office D-17-Trm	220-Office D-17	Uncontrolled	NA	NA	453	NA	0.00	NA	NA	NA	☐
223-Office D-18-Trm	223-Office D-18	Uncontrolled	NA	NA	453	NA	0.00	NA	NA	NA	☐
226-Office D-19-Trm	226-Office D-19	Uncontrolled	NA	NA	453	NA	0.00	NA	NA	NA	☐

H8. EVAPORATIVE COOLER SUMMARY

This Section Does Not Apply

I1. WATER HEATER EQUIPMENT SUMMARY

1	2	3	4	5	6	7	8	9	10	11	12	13	14
Name	Heater Element Type	Tank Type	Qty	Tank Vol (gal)	Rated Input	Rated Input Unit	Efficiency	Efficiency Unit	Tank Insulation R-value (Int/Ext)	Standby Loss Fraction	Heat Pump Type	1st Hour Rating or Flow Rate (gal)	Tank Location or Ambient Condition
Instantaneous Electric2	Electricity	Instantaneous	19	1.00	2.3	kW	0.98	UEF	NA	NA	NA	NA	NA
Instantaneous Electric2 2	Electricity	Instantaneous	19	1.00	2.3	kW	0.98	UEF	NA	NA	NA	NA	NA
Instantaneous Electric2 3	Electricity	Instantaneous	19	1.00	2.3	kW	0.98	UEF	NA	NA	NA	NA	NA
Instantaneous Electric2 4	Electricity	Instantaneous	19	1.00	2.3	kW	0.98	UEF	NA	NA	NA	NA	NA

Project Name:	Madera Industrial WHSE	NRCC-PRF-01-E	Page 30 of 33
Project Address:	S. Schnoor Avenue Madera	Calculation Date/Time:	10:23, Thu, Nov 18, 2021
Input File Name:	2020.264 Energy Calcs (2x4).cibd19x		

K1. INDOOR CONDITIONED LIGHTING GENERAL INFO

1	2	3	4	5	6
Occupancy Type [1]	Conditioned Floor Area [2] (ft²)	Installed Lighting Power (Watts)	Lighting Control Credits (Watts)	Additional (Custom) Allowance	
				Area Category Footnotes (Watts)	Tailored Method (Watts)
Office Area (<250 square feet)	12,084	8,436	0	0	0
Building Totals:	**12,084**	**8,436**	**0**	**0**	**0**

[1] See Table 140.6-C
[2] See NRCC-LTI-01-E for unconditioned spaces
[3] Lighting information for existing spaces modeled is not included in the table

K4. INDOOR CONDITIONED LIGHTING MANDATORY LIGHTING CONTROLS

Building Level Controls

1	2
Mandatory Demand Response §110.12(c)	Shut-Off Controls §130.1(c)
Required	Required

Area Level Controls (Includes all lighting controls installed in conditioned space to meet mandatory requirements per §130.1)

4	5	6	7	8	9	10
Area Description	Area Category Primary Function Area	Area Controls 130.1(a)	Multi-Level Controls 130.1(b)	Shut-Off Controls 130.1(c)	Primary Daylighting 130.1(d)	Secondary Daylighting 140.5(d)

Project Name:	Madera Industrial WHSE	NRCC-PRF-01-E	Page 31 of 33
Project Address:	S. Schnoor Avenue Madera	Calculation Date/Time:	10:23, Thu, Nov 18, 2021
Input File Name:	2020.264 Energy Calcs (2x4).cibd19x		

L. DECLARATION OF REQUIRED CERTIFICATES OF INSTALLATION

Table Instructions: Selections shall be made by Documentation Author to indicate which Certificates of Installation must be submitted for the features to be recognized for compliance. These documents bust be retained and provided to the building inspector during construction and can be found online at: https://www.energy.ca.gov/title24/2019standards/2019_compliance_documents/Nonresidential_Documents/NRCI/

Building Component	Form/Title
Envelope	NRCI-ENV-01-E - Must be submitted for all buildings
Mechanical	NRCI-MCH-01-E - Must be submitted for all buildings
Plumbing	NRCI-PLB-01-E - Must be submitted for all buildings
Indoor Lighting	NRCI-LTI-01-E - Must be submitted for all buildings

Project Name:	Madera Industrial WHSE	NRCC-PRF-01-E	Page 32 of 33
Project Address:	S. Schnoor Avenue Madera	Calculation Date/Time:	10:23, Thu, Nov 18, 2021
Input File Name:	2020.264 Energy Calcs (2x4).cibd19x		

M. DECLARATION OF REQUIRED CERTIFICATES OF ACCEPTANCE

Table Instructions: Selections shall be made by Documentation Author to indicate which Certificates of Acceptance must be submitted for the features to be recognized for compliance. These documents must be provided to the building inspector during construction and must be completed through an Acceptance Test Technician Certification Provider (ATTCP). For more information visit:https://www.energy.ca.gov/title24/2019standards/2019_compliance_documents/Nonresidential_Documents/NRCA/

Building Component	Form/Title
Indoor Lighting	NRCA-LTI-02-A - Occupancy Sensors and Automatic Time Switch Controls
	NRCA-LTI-04-A - Demand Responsive Lighting Controls
Mechanical	NRCA-MCH-02-A Outdoor Air must be submitted for all newly installed HVAC units. Note: MCH02-A can be performed in conjunction with MCH-07-A Supply Fan VFD Acceptance (if applicable) since testing activities overlap
	NRCA-MCH-03-A Constant Volume Single Zone HVAC
	NRCA-MCH-06-A Demand Control Ventilation Systems Acceptance must be submitted for all systems required to employ demand controlled ventilation (refer to §120.1(c)3) can vary outside ventilation flow rates based on maintaining interior carbon dioxide (CO2) concentration setpoints

HVAC SYSTEM HEATING AND COOLING LOADS SUMMARY

Project Name: Madera Industrial WHSE — Date: 11/18/2021
System Name: Building A Suite #1 — Floor Area: 159

ENGINEERING CHECKS	
Number of Systems	1
Heating System	
Output per System	12,000
Total Output (Btuh)	12,000
Output (Btuh/sqft)	75.6
Cooling System	
Output per System	9,000
Total Output (Btuh)	9,000
Total Output (Tons)	0.8
Total Output (Btuh/sqft)	56.7
Total Output (sqft/Ton)	211.7
Air System	
CFM per System	453
Airflow (cfm)	453
Airflow (cfm/sqft)	2.85
Airflow (cfm/Ton)	604.0
Outside Air (%)	2.0%
Outside Air (cfm/sqft)	0.06

Note: values above given at ARI conditions

SYSTEM LOAD	COIL COOLING PEAK			COIL HTG. PEAK	
	CFM	Sensible	Latent	CFM	Sensible
Total Room Loads	146	2,915	336	45	1,660
Return Vented Lighting		0			
Return Air Ducts		146			83
Return Fan		0			0
Ventilation	9	250	65	9	449
Supply Fan		478			-478
Supply Air Ducts		146			83
TOTAL SYSTEM LOAD		3,934	401		1,798
HVAC EQUIPMENT SELECTION					
Fujitsu AOUG09LMAS1/ ASUG09LMAS		8,089	0		12,000
Total Adjusted System Output (Adjusted for Peak Design conditions)		8,089	0		12,000
TIME OF SYSTEM PEAK			Aug 2 PM		Jan 1 AM

HEATING SYSTEM PSYCHROMETRICS (Airstream Temperatures at Time of Heating Peak)

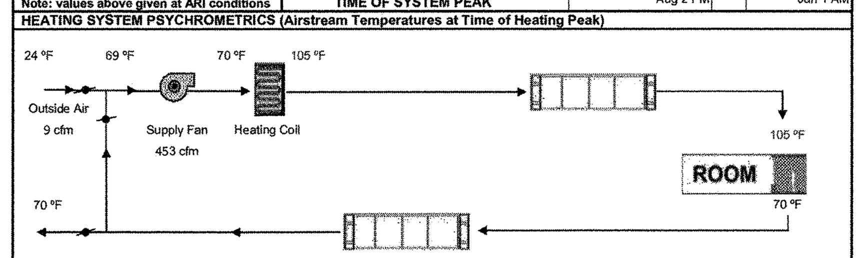

COOLING SYSTEM PSYCHROMETRICS (Airstream Temperatures at Time of Cooling Peak)

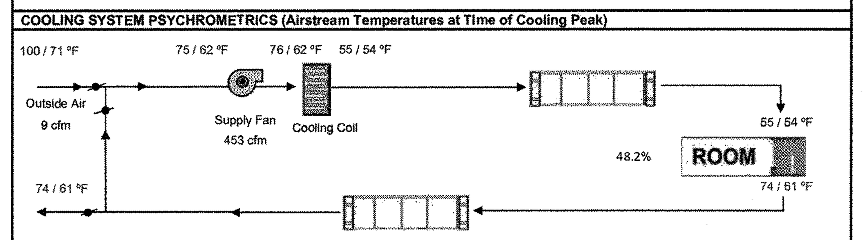

HVAC SYSTEM HEATING AND COOLING LOADS SUMMARY

Project Name: Madera Industrial WHSE — Date: 11/18/2021
System Name: Building A Suite #2 — Floor Area: 159

ENGINEERING CHECKS	
Number of Systems	1
Heating System	
Output per System	12,000
Total Output (Btuh)	12,000
Output (Btuh/sqft)	75.6
Cooling System	
Output per System	9,000
Total Output (Btuh)	9,000
Total Output (Tons)	0.8
Total Output (Btuh/sqft)	56.7
Total Output (sqft/Ton)	211.7
Air System	
CFM per System	453
Airflow (cfm)	453
Airflow (cfm/sqft)	2.85
Airflow (cfm/Ton)	604.0
Outside Air (%)	2.0%
Outside Air (cfm/sqft)	0.06

Note: values above given at ARI conditions

SYSTEM LOAD	COIL COOLING PEAK			COIL HTG. PEAK	
	CFM	Sensible	Latent	CFM	Sensible
Total Room Loads	128	2,557	336	35	1,319
Return Vented Lighting		0			
Return Air Ducts		128			66
Return Fan		0			0
Ventilation	9	250	65	9	449
Supply Fan		478			-478
Supply Air Ducts		128			66
TOTAL SYSTEM LOAD		3,541	401		1,423
HVAC EQUIPMENT SELECTION					
Fujitsu AOUG09LMAS1/ ASUG09LMAS		8,087	0		12,000
Total Adjusted System Output (Adjusted for Peak Design conditions)		8,087	0		12,000
TIME OF SYSTEM PEAK			Aug 2 PM		Jan 1 AM

HEATING SYSTEM PSYCHROMETRICS (Airstream Temperatures at Time of Heating Peak)

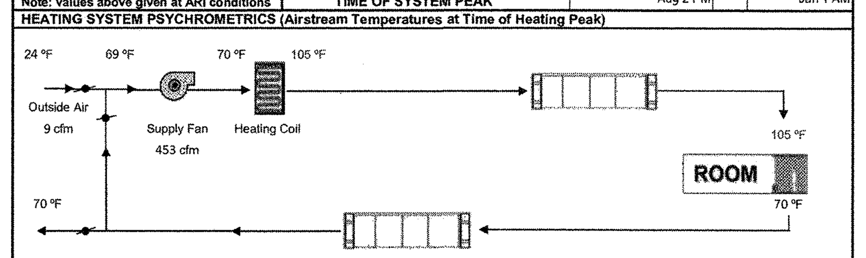

COOLING SYSTEM PSYCHROMETRICS (Airstream Temperatures at Time of Cooling Peak)

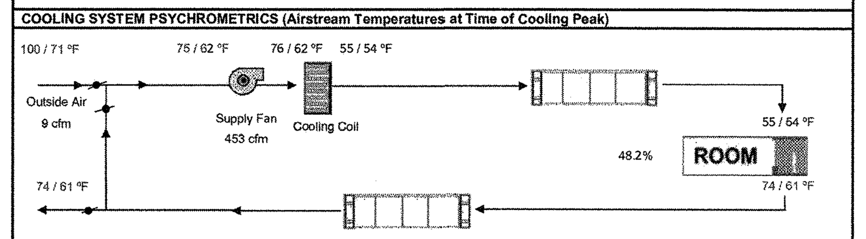

HVAC SYSTEM HEATING AND COOLING LOADS SUMMARY

Project Name: Madera Industrial WHSE — Date: 11/18/2021
System Name: Building A Suite #3 — Floor Area: 159

ENGINEERING CHECKS	
Number of Systems	1
Heating System	
Output per System	12,000
Total Output (Btuh)	12,000
Output (Btuh/sqft)	75.6
Cooling System	
Output per System	9,000
Total Output (Btuh)	9,000
Total Output (Tons)	0.8
Total Output (Btuh/sqft)	56.7
Total Output (sqft/Ton)	211.7
Air System	
CFM per System	453
Airflow (cfm)	453
Airflow (cfm/sqft)	2.85
Airflow (cfm/Ton)	604.0
Outside Air (%)	2.0%
Outside Air (cfm/sqft)	0.06

Note: values above given at ARI conditions

SYSTEM LOAD	COIL COOLING PEAK			COIL HTG. PEAK	
	CFM	Sensible	Latent	CFM	Sensible
Total Room Loads	128	2,557	336	35	1,319
Return Vented Lighting		0			
Return Air Ducts		128			66
Return Fan		0			0
Ventilation	9	250	65	9	449
Supply Fan		478			-478
Supply Air Ducts		128			66
TOTAL SYSTEM LOAD		3,541	401		1,423
HVAC EQUIPMENT SELECTION					
Fujitsu AOUG09LMAS1/ ASUG09LMAS		8,087	0		12,000
Total Adjusted System Output (Adjusted for Peak Design conditions)		8,087	0		12,000
TIME OF SYSTEM PEAK			Aug 2 PM		Jan 1 AM

HEATING SYSTEM PSYCHROMETRICS (Airstream Temperatures at Time of Heating Peak)

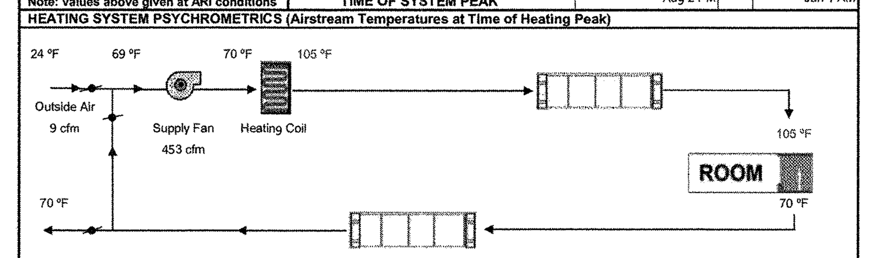

COOLING SYSTEM PSYCHROMETRICS (Airstream Temperatures at Time of Cooling Peak)

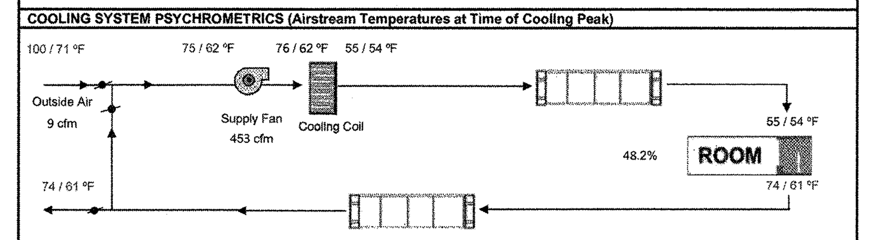

Project Name:	Madera Industrial WHSE	NRCC-PRF-01-E	Page 33 of 33
Project Address:	S. Schnoor Avenue Madera	Calculation Date/Time:	10:23, Thu, Nov 18, 2021
Input File Name:	2020.264 Energy Calcs (2x4).cibd19x		

DOCUMENTATION AUTHOR'S DECLARATION STATEMENT

I certify that this Certificate of Compliance documentation is accurate and complete.

Documentation Author Name: Daniel Field	Signature: Daniel Field
Company: GMA Consulting Engineers & Architects, Inc.	
Address: 7337 N. First St. Suite #110	Signature Date: 2021-11-18
City/State/Zip: Fresno California 93720	CEA/ HERS Certification Identification (if applicable):
Phone: (559) 435-1411	

RESPONSIBLE PERSON'S DECLARATION STATEMENT

I certify the following under penalty of perjury, under the laws of the State of California:

1. The information provided on this Certificate of Compliance is true and correct.
2. I am eligible under Division 3 of the Business and Professions Code to accept responsibility for the building design or system design identified on this Certificate of Compliance (responsible designer)
3. The energy features and performance specifications, materials, components, and manufactured devices for the building design or system design identified on this Certificate of Compliance conform to the requirements of Title 24, Part 1 and Part 6 of the California Code of Regulations.
4. The building design features or system design features identified on this Certificate of Compliance are consistent with the information provided on other applicable compliance documents, worksheets, calculations, plans and specifications submitted to the enforcement agency for approval with this building permit application.
5. I will ensure that a completed signed copy of this Certificate of Compliance shall be made available with the building permit(s) issued for the building, and made available to the enforcement agency for all applicable inspections. I understand that a completed signed copy of this Certificate of Compliance is required to be included with the documentation the builder provides to the building owner at occupancy.

Responsible Envelope Designer Name:	Signature: [signature]	
Company: DBKO Design + Build		
Address: 1480 Broadway #2619	Date Signed: 11/17/2021	
City/State/Zip: San Diego Ca 92101		
Phone: (559) 930-3256	Title: DESIGNER OF RECORD	License #: 1032283
Responsible Lighting Designer Name: Tom Dukes	Signature:	
Company: Performance Electric		
Address:	Date Signed:	
City/State/Zip:		
Phone: (559) 631-1000	Title:	License #:
Responsible Mechanical Designer Name: Steve Mendrin	Signature: Steve Mendrin	
Company: Valley Air Conditioning & Repair		
Address: 825 S Topeka Ave	Date Signed: 11/18/2021	
City/State/Zip: Fresno CA 93721		
Phone: (559) 217-6869	Title:	License #: 669606

2019CBC
City of Madera
Building Department
The approval of these plans does not prevent the City of Madera from requiring correction of errors or omissions in the plans, specifications of construction. Subject to field inspections and approvals, laws, codes and ordinances.
APPROVED
By: MAR 0 3 2022
Date: MAR 0 3 2022
2019CBC

These plans or drawings or any part of these publications are the exclusive propery of VAR, and may not be reproduced, or transmitted in any form or by means, recording, electronic, mechanical, photocoping or otherwise without written permission by VAR. Copies of these drawings are supplied to the owner or the Building contractor and, otherwise for the use of this project only. Any Re-use of these drawings or documents is prohibited without the written permission of VAR. If VAR is not awarded the project, VAR will not warranty these plans, drawings or contents and will not assume any liability or responsibility for the unauthorized use of these plans or drawings, and the plans or drawings and contents must be returned to VAR immediately.

Air Conditioning & Heating
Custom Sheet Metal
Sales & Service

VAR
Since 1970
825 S Topeka Ave
Fresno CA, 93721
559-237-3188

Signed Steve Mendrin Date 11-18-21
Steve Mendrin
License #669606
Valley Air Conditioning & Repair.

Valley Air Conditioning & Repair, Inc. — VAR — Since 1970

50 Years of Indoor comfort.

BY	REVISION	DATE

SEAL

ANY INFORMATION OR DATA ON THIS DRAWING IS NOT INTENDED TO BE SUITABLE FOR REUSE BY ANY PERSON, FIRM, CORPORATION, OR ANY OTHERS ON EXTENSIONS OF THIS PROJECT OR FOR ANY USE ON ANY OTHER PROJECT. ANY REUSE WITHOUT WRITTEN VERIFICATION AND ADAPTATION BY THE ENGINEER FOR THE SPECIFIC PURPOSE INTENDED WILL BE AT THE USER'S SOLE RISK AND WITHOUT LIABILITY OR LEGAL EXPOSURE TO THE ENGINEER.

TYPICAL MECHANICAL FLOOR PLAN

LEASE FLEX. / WAREHOUSE BUILDINGS
FOR
MADERA INDUSTRIAL WHSE, LLC
S. SCHNOOR AVENUE, MADERA, CA

JOB NUMBER	21107
DESIGNED BY	
DRAWN BY	
DATE	9/09/2021
SHEET NUMBER	M5

HVAC SYSTEM HEATING AND COOLING LOADS SUMMARY

Project Name	Date
Madera Industrial WHSE	11/18/2021
System Name	**Floor Area**
Building A Suite #5	159

ENGINEERING CHECKS	
Number of Systems	1
Heating System	
Output per System	12,000
Total Output (Btuh)	12,000
Output (Btuh/sqft)	75.6
Cooling System	
Output per System	9,000
Total Output (Btuh)	9,000
Total Output (Tons)	0.8
Total Output (Btuh/sqft)	56.7
Total Output (sqft/Ton)	211.7
Air System	
CFM per System	453
Airflow (cfm)	453
Airflow (cfm/sqft)	2.85
Airflow (cfm/Ton)	604.0
Outside Air (%)	2.0%
Outside Air (cfm/sqft)	0.06
Note: values above given at ARI conditions	

SYSTEM LOAD	COIL COOLING PEAK			COIL HTG. PEAK	
	CFM	Sensible	Latent	CFM	Sensible
Total Room Loads	128	2,557	336	35	1,319
Return Vented Lighting		0			
Return Air Ducts		128			66
Return Fan		0			0
Ventilation	9	250	65	9	449
Supply Fan		478			-478
Supply Air Ducts		128			66
TOTAL SYSTEM LOAD		3,541	401		1,423

HVAC EQUIPMENT SELECTION			
Fujitsu AOUG09LMAS1/ ASUG09LMAS	8,087	0	12,000
Total Adjusted System Output (Adjusted for Peak Design conditions)	8,087	0	12,000
TIME OF SYSTEM PEAK	Aug 2 PM		Jan 1 AM

HEATING SYSTEM PSYCHROMETRICS (Airstream Temperatures at Time of Heating Peak)

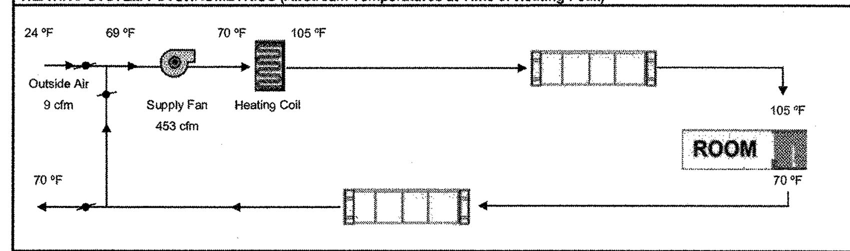

COOLING SYSTEM PSYCHROMETRICS (Airstream Temperatures at Time of Cooling Peak)

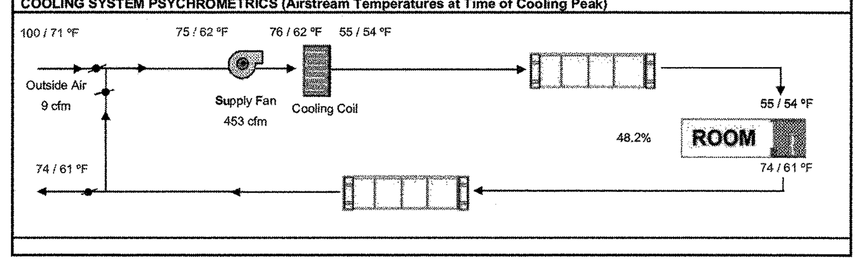

HVAC SYSTEM HEATING AND COOLING LOADS SUMMARY

Project Name	Date
Madera Industrial WHSE	11/18/2021
System Name	**Floor Area**
Building A Suite #6	159

ENGINEERING CHECKS	
Number of Systems	1
Heating System	
Output per System	12,000
Total Output (Btuh)	12,000
Output (Btuh/sqft)	75.6
Cooling System	
Output per System	9,000
Total Output (Btuh)	9,000
Total Output (Tons)	0.8
Total Output (Btuh/sqft)	56.7
Total Output (sqft/Ton)	211.7
Air System	
CFM per System	453
Airflow (cfm)	453
Airflow (cfm/sqft)	2.85
Airflow (cfm/Ton)	604.0
Outside Air (%)	2.0%
Outside Air (cfm/sqft)	0.06
Note: values above given at ARI conditions	

SYSTEM LOAD	COIL COOLING PEAK			COIL HTG. PEAK	
	CFM	Sensible	Latent	CFM	Sensible
Total Room Loads	128	2,557	336	35	1,319
Return Vented Lighting		0			
Return Air Ducts		128			66
Return Fan		0			0
Ventilation	9	250	65	9	449
Supply Fan		478			-478
Supply Air Ducts		128			66
TOTAL SYSTEM LOAD		3,541	401		1,423

HVAC EQUIPMENT SELECTION			
Fujitsu AOUG09LMAS1/ ASUG09LMAS	8,087	0	12,000
Total Adjusted System Output (Adjusted for Peak Design conditions)	8,087	0	12,000
TIME OF SYSTEM PEAK	Aug 2 PM		Jan 1 AM

HEATING SYSTEM PSYCHROMETRICS (Airstream Temperatures at Time of Heating Peak)

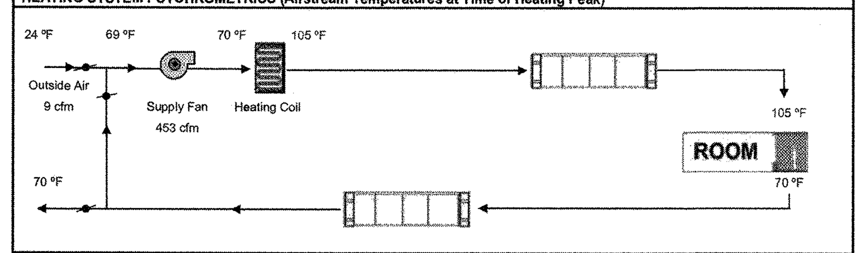

COOLING SYSTEM PSYCHROMETRICS (Airstream Temperatures at Time of Cooling Peak)

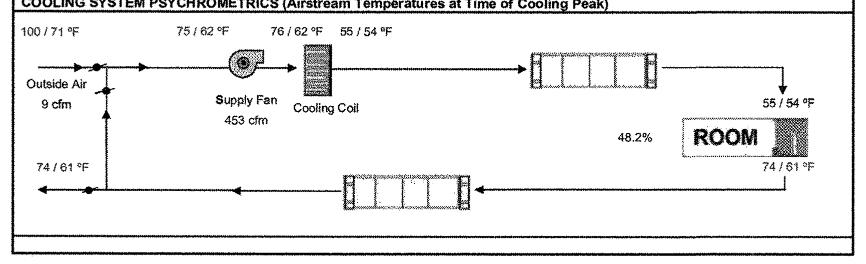

HVAC SYSTEM HEATING AND COOLING LOADS SUMMARY

Project Name	Date
Madera Industrial WHSE	11/18/2021
System Name	**Floor Area**
Building A Suite #7	159

ENGINEERING CHECKS	
Number of Systems	1
Heating System	
Output per System	12,000
Total Output (Btuh)	12,000
Output (Btuh/sqft)	75.6
Cooling System	
Output per System	9,000
Total Output (Btuh)	9,000
Total Output (Tons)	0.8
Total Output (Btuh/sqft)	58.7
Total Output (sqft/Ton)	211.7
Air System	
CFM per System	453
Airflow (cfm)	453
Airflow (cfm/sqft)	2.85
Airflow (cfm/Ton)	604.0
Outside Air (%)	2.0%
Outside Air (cfm/sqft)	0.06
Note: values above given at ARI conditions	

SYSTEM LOAD	COIL COOLING PEAK			COIL HTG. PEAK	
	CFM	Sensible	Latent	CFM	Sensible
Total Room Loads	128	2,557	336	35	1,319
Return Vented Lighting		0			
Return Air Ducts		128			66
Return Fan		0			0
Ventilation	9	250	65	9	449
Supply Fan		478			-478
Supply Air Ducts		128			66
TOTAL SYSTEM LOAD		3,541	401		1,423

HVAC EQUIPMENT SELECTION			
Fujitsu AOUG09LMAS1/ ASUG09LMAS	8,087	0	12,000
Total Adjusted System Output (Adjusted for Peak Design conditions)	8,087	0	12,000
TIME OF SYSTEM PEAK	Aug 2 PM		Jan 1 AM

HEATING SYSTEM PSYCHROMETRICS (Airstream Temperatures at Time of Heating Peak)

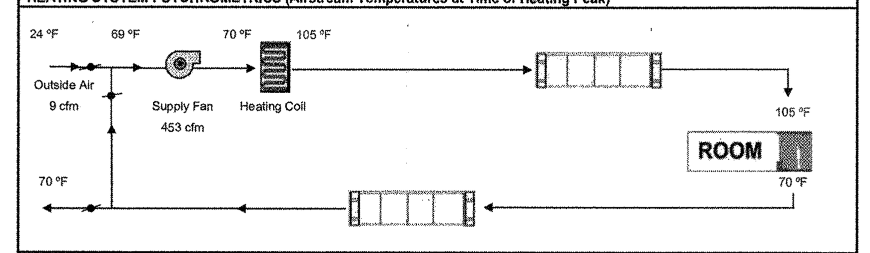

COOLING SYSTEM PSYCHROMETRICS (Airstream Temperatures at Time of Cooling Peak)

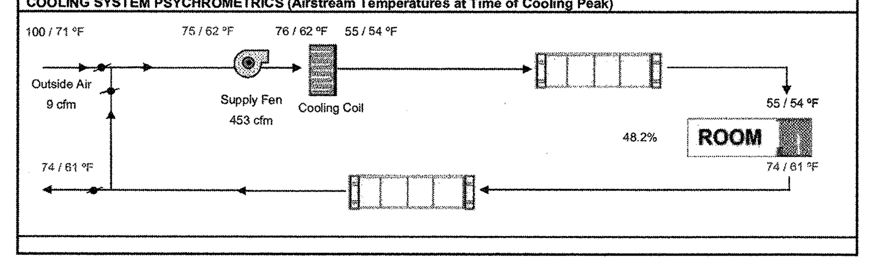

HVAC SYSTEM HEATING AND COOLING LOADS SUMMARY

Project Name	Date
Madera Industrial WHSE	11/18/2021
System Name	**Floor Area**
Building A Suite #8	159

ENGINEERING CHECKS	
Number of Systems	1
Heating System	
Output per System	12,000
Total Output (Btuh)	12,000
Output (Btuh/sqft)	75.6
Cooling System	
Output per System	9,000
Total Output (Btuh)	9,000
Total Output (Tons)	0.8
Total Output (Btuh/sqft)	56.7
Total Output (sqft/Ton)	211.7
Air System	
CFM per System	453
Airflow (cfm)	453
Airflow (cfm/sqft)	2.85
Airflow (cfm/Ton)	604.0
Outside Air (%)	2.0%
Outside Air (cfm/sqft)	0.06
Note: values above given at ARI conditions	

SYSTEM LOAD	COIL COOLING PEAK			COIL HTG. PEAK	
	CFM	Sensible	Latent	CFM	Sensible
Total Room Loads	128	2,557	338	35	1,319
Return Vented Lighting		0			
Return Air Ducts		128			66
Return Fan		0			0
Ventilation	9	250	65	9	449
Supply Fan		478			-478
Supply Air Ducts		128			66
TOTAL SYSTEM LOAD		3,541	401		1,423

HVAC EQUIPMENT SELECTION			
Fujitsu AOUG09LMAS1/ ASUG09LMAS	8,087	0	12,000
Total Adjusted System Output (Adjusted for Peak Design conditions)	8,087	0	12,000
TIME OF SYSTEM PEAK	Aug 2 PM		Jan 1 AM

HEATING SYSTEM PSYCHROMETRICS (Airstream Temperatures at Time of Heating Peak)

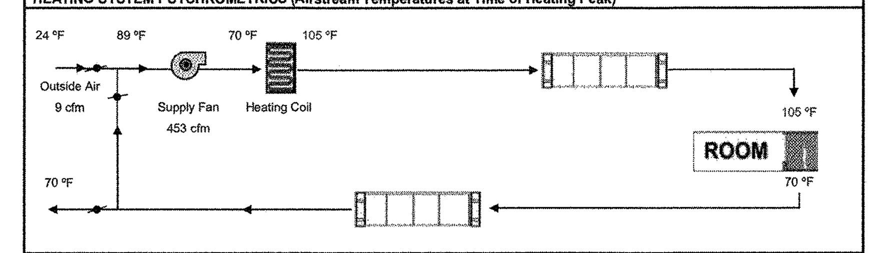

COOLING SYSTEM PSYCHROMETRICS (Airstream Temperatures at Time of Cooling Peak)

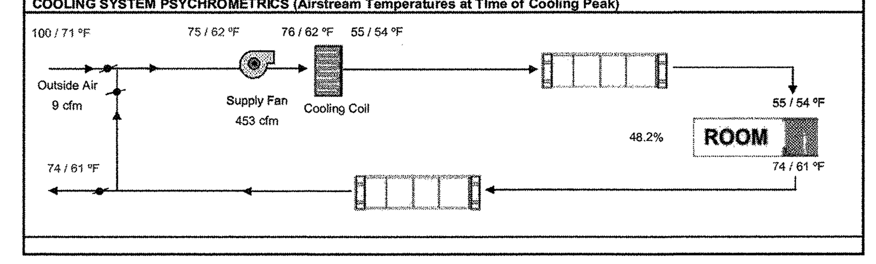

HVAC SYSTEM HEATING AND COOLING LOADS SUMMARY

Project Name	Date
Madera Industrial WHSE	11/18/2021
System Name	**Floor Area**
Building A Suite #9	159

ENGINEERING CHECKS	
Number of Systems	1
Heating System	
Output per System	12,000
Total Output (Btuh)	12,000
Output (Btuh/sqft)	75.6
Cooling System	
Output per System	9,000
Total Output (Btuh)	9,000
Total Output (Tons)	0.8
Total Output (Btuh/sqft)	56.7
Total Output (sqft/Ton)	211.7
Air System	
CFM per System	453
Airflow (cfm)	453
Airflow (cfm/sqft)	2.85
Airflow (cfm/Ton)	604.0
Outside Air (%)	2.0%
Outside Air (cfm/sqft)	0.06
Note: values above given at ARI conditions	

SYSTEM LOAD	COIL COOLING PEAK			COIL HTG. PEAK	
	CFM	Sensible	Latent	CFM	Sensible
Total Room Loads	128	2,557	336	35	1,319
Return Vented Lighting		0			
Return Air Ducts		128			66
Return Fan		0			0
Ventilation	9	250	65	9	449
Supply Fan		478			-478
Supply Air Ducts		128			66
TOTAL SYSTEM LOAD		3,541	401		1,423

HVAC EQUIPMENT SELECTION			
Fujitsu AOUG09LMAS1/ ASUG09LMAS	8,087	0	12,000
Total Adjusted System Output (Adjusted for Peak Design conditions)	8,087	0	12,000
TIME OF SYSTEM PEAK	Aug 2 PM		Jan 1 AM

HEATING SYSTEM PSYCHROMETRICS (Airstream Temperatures at Time of Heating Peak)

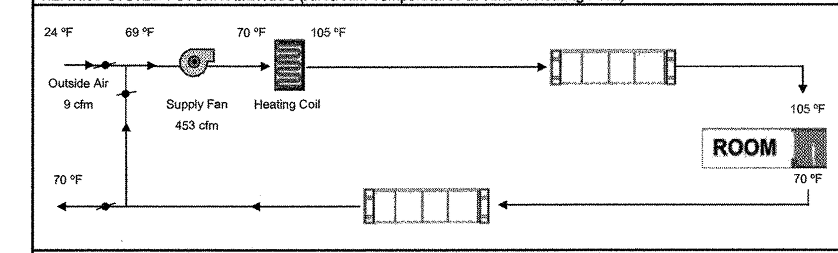

COOLING SYSTEM PSYCHROMETRICS (Airstream Temperatures at Time of Cooling Peak)

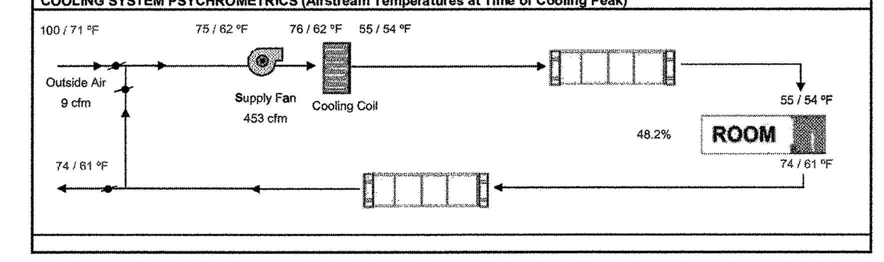

HVAC SYSTEM HEATING AND COOLING LOADS SUMMARY

Project Name	Date
Madera Industrial WHSE	11/18/2021
System Name	**Floor Area**
Building A Suite #10	159

ENGINEERING CHECKS	
Number of Systems	1
Heating System	
Output per System	12,000
Total Output (Btuh)	12,000
Output (Btuh/sqft)	75.6
Cooling System	
Output per System	9,000
Total Output (Btuh)	9,000
Total Output (Tons)	0.8
Total Output (Btuh/sqft)	56.7
Total Output (sqft/Ton)	211.7
Air System	
CFM per System	453
Airflow (cfm)	453
Airflow (cfm/sqft)	2.85
Airflow (cfm/Ton)	604.0
Outside Air (%)	2.0%
Outside Air (cfm/sqft)	0.06
Note: values above given at ARI conditions	

SYSTEM LOAD	COIL COOLING PEAK			COIL HTG. PEAK	
	CFM	Sensible	Latent	CFM	Sensible
Total Room Loads	128	2,557	336	35	1,319
Return Vented Lighting		0			
Return Air Ducts		128			66
Return Fan		0			0
Ventilation	9	250	65	9	449
Supply Fan		478			-478
Supply Air Ducts		128			66
TOTAL SYSTEM LOAD		3,541	401		1,423

HVAC EQUIPMENT SELECTION			
Fujitsu AOUG09LMAS1/ ASUG09LMAS	8,087	0	12,000
Total Adjusted System Output (Adjusted for Peak Design conditions)	8,087	0	12,000
TIME OF SYSTEM PEAK	Aug 2 PM		Jan 1 AM

HEATING SYSTEM PSYCHROMETRICS (Airstream Temperatures at Time of Heating Peak)

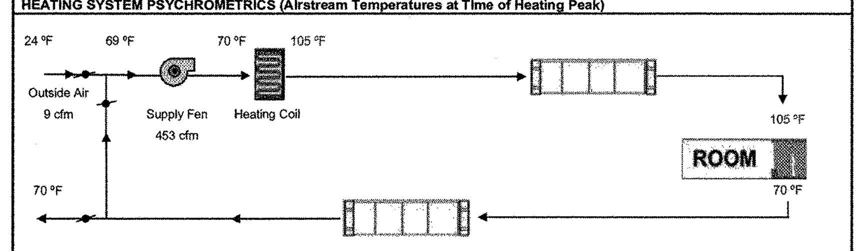

COOLING SYSTEM PSYCHROMETRICS (Airstream Temperatures at Time of Cooling Peak)

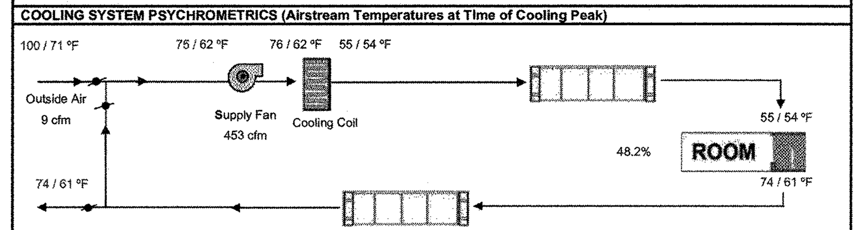

HVAC SYSTEM HEATING AND COOLING LOADS SUMMARY

Project Name	Date
Madera Industrial WHSE	11/18/2021
System Name	**Floor Area**
Building A Suite #11	159

ENGINEERING CHECKS	
Number of Systems	1
Heating System	
Output per System	12,000
Total Output (Btuh)	12,000
Output (Btuh/sqft)	75.6
Cooling System	
Output per System	9,000
Total Output (Btuh)	9,000
Total Output (Tons)	0.8
Total Output (Btuh/sqft)	56.7
Total Output (sqft/Ton)	211.7
Air System	
CFM per System	453
Airflow (cfm)	453
Airflow (cfm/sqft)	2.85
Airflow (cfm/Ton)	604.0
Outside Air (%)	2.0%
Outside Air (cfm/sqft)	0.06
Note: values above given at ARI conditions	

SYSTEM LOAD	COIL COOLING PEAK			COIL HTG. PEAK	
	CFM	Sensible	Latent	CFM	Sensible
Total Room Loads	128	2,557	336	35	1,319
Return Vented Lighting		0			
Return Air Ducts		128			66
Return Fan		0			0
Ventilation	9	250	65	9	449
Supply Fan		478			-478
Supply Air Ducts		128			66
TOTAL SYSTEM LOAD		3,541	401		1,423

HVAC EQUIPMENT SELECTION			
Fujitsu AOUG09LMAS1/ ASUG09LMAS	8,087	0	12,000
Total Adjusted System Output (Adjusted for Peak Design conditions)	8,087	0	12,000
TIME OF SYSTEM PEAK	Aug 2 PM		Jan 1 AM

HEATING SYSTEM PSYCHROMETRICS (Airstream Temperatures at Time of Heating Peak)

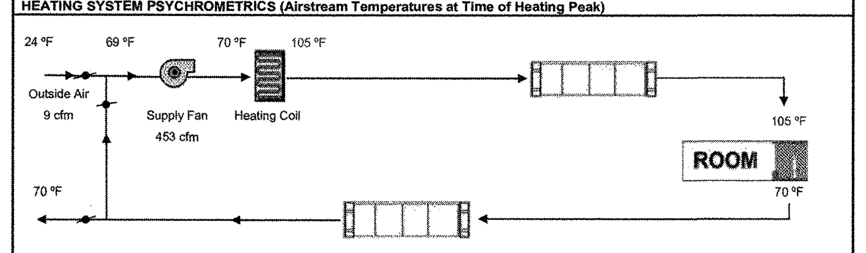

COOLING SYSTEM PSYCHROMETRICS (Airstream Temperatures at Time of Cooling Peak)

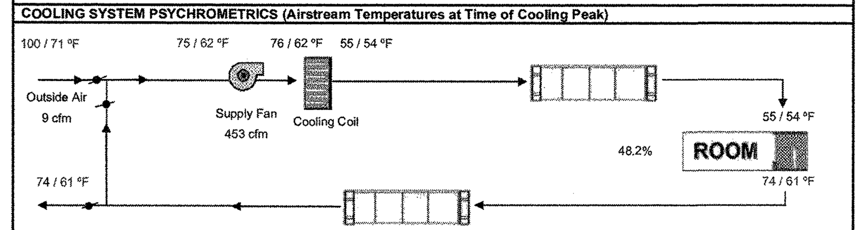

HVAC SYSTEM HEATING AND COOLING LOADS SUMMARY

Project Name	Date
Madera Industrial WHSE	11/18/2021
System Name	**Floor Area**
Building A Suite #12	159

ENGINEERING CHECKS	
Number of Systems	1
Heating System	
Output per System	12,000
Total Output (Btuh)	12,000
Output (Btuh/sqft)	75.6
Cooling System	
Output per System	9,000
Total Output (Btuh)	9,000
Total Output (Tons)	0.8
Total Output (Btuh/sqft)	56.7
Total Output (sqft/Ton)	211.7
Air System	
CFM per System	453
Airflow (cfm)	453
Airflow (cfm/sqft)	2.85
Airflow (cfm/Ton)	604.0
Outside Air (%)	2.0%
Outside Air (cfm/sqft)	0.06
Note: values above given at ARI conditions	

SYSTEM LOAD	COIL COOLING PEAK			COIL HTG. PEAK	
	CFM	Sensible	Latent	CFM	Sensible
Total Room Loads	128	2,557	336	35	1,319
Return Vented Lighting		0			
Return Air Ducts		128			66
Return Fan		0			0
Ventilation	9	250	65	9	449
Supply Fan		478			-478
Supply Air Ducts		128			66
TOTAL SYSTEM LOAD		3,541	401		1,423

HVAC EQUIPMENT SELECTION			
Fujitsu AOUG09LMAS1/ ASUG09LMAS	8,087	0	12,000
Total Adjusted System Output (Adjusted for Peak Design conditions)	8,087	0	12,000
TIME OF SYSTEM PEAK	Aug 2 PM		Jan 1 AM

HEATING SYSTEM PSYCHROMETRICS (Airstream Temperatures at Time of Heating Peak)

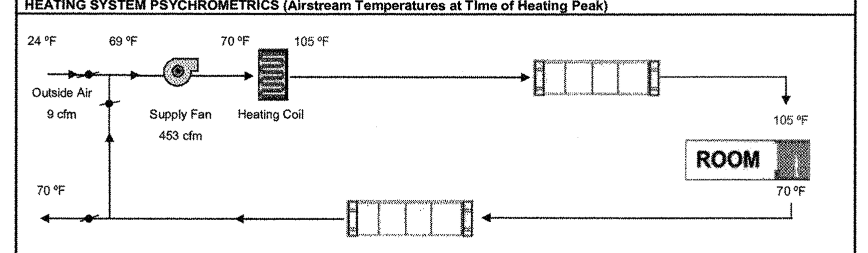

COOLING SYSTEM PSYCHROMETRICS (Airstream Temperatures at Time of Cooling Peak)

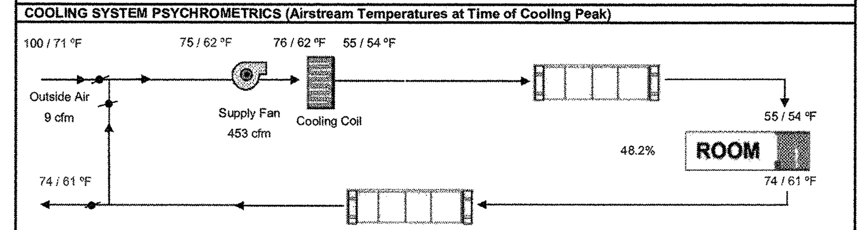

HVAC SYSTEM HEATING AND COOLING LOADS SUMMARY

Project Name	Date
Madera Industrial WHSE	11/18/2021
System Name	**Floor Area**
Building A Suite #13	159

ENGINEERING CHECKS	
Number of Systems	1
Heating System	
Output per System	12,000
Total Output (Btuh)	12,000
Output (Btuh/sqft)	75.6
Cooling System	
Output per System	9,000
Total Output (Btuh)	9,000
Total Output (Tons)	0.8
Total Output (Btuh/sqft)	56.7
Total Output (sqft/Ton)	211.7
Air System	
CFM per System	453
Airflow (cfm)	453
Airflow (cfm/sqft)	2.85
Airflow (cfm/Ton)	604.0
Outside Air (%)	2.0%
Outside Air (cfm/sqft)	0.06
Note: values above given at ARI conditions	

SYSTEM LOAD	COIL COOLING PEAK			COIL HTG. PEAK	
	CFM	Sensible	Latent	CFM	Sensible
Total Room Loads	128	2,557	336	35	1,319
Return Vented Lighting		0			
Return Air Ducts		128			66
Return Fan		0			0
Ventilation	9	250	65	9	449
Supply Fan		478			-478
Supply Air Ducts		128			66
TOTAL SYSTEM LOAD		3,541	401		1,423

HVAC EQUIPMENT SELECTION			
Fujitsu AOUG09LMAS1/ ASUG09LMAS	8,087	0	12,000
Total Adjusted System Output (Adjusted for Peak Design conditions)	8,087	0	12,000
TIME OF SYSTEM PEAK	Aug 2 PM		Jan 1 AM

HEATING SYSTEM PSYCHROMETRICS (Airstream Temperatures at Time of Heating Peak)

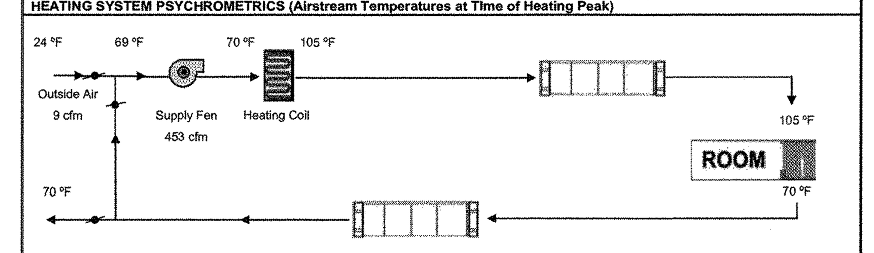

COOLING SYSTEM PSYCHROMETRICS (Airstream Temperatures at Time of Cooling Peak)

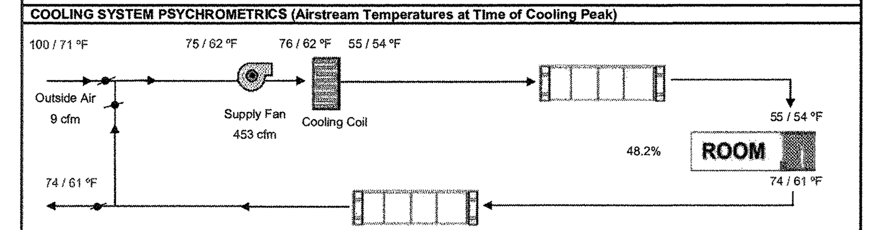

HVAC SYSTEM HEATING AND COOLING LOADS SUMMARY

Project Name	Date
Madera Industrial WHSE	11/18/2021
System Name	**Floor Area**
Building A Suite #14	159

ENGINEERING CHECKS	
Number of Systems	1
Heating System	
Output per System	12,000
Total Output (Btuh)	12,000
Output (Btuh/sqft)	75.6
Cooling System	
Output per System	9,000
Total Output (Btuh)	9,000
Total Output (Tons)	0.8
Total Output (Btuh/sqft)	56.7
Total Output (sqft/Ton)	211.7
Air System	
CFM per System	453
Airflow (cfm)	453
Airflow (cfm/sqft)	2.85
Airflow (cfm/Ton)	604.0
Outside Air (%)	2.0%
Outside Air (cfm/sqft)	0.06
Note: values above given at ARI conditions	

SYSTEM LOAD	COIL COOLING PEAK			COIL HTG. PEAK	
	CFM	Sensible	Latent	CFM	Sensible
Total Room Loads	128	2,557	336	35	1,319
Return Vented Lighting		0			
Return Air Ducts		128			66
Return Fan		0			0
Ventilation	9	250	65	9	449
Supply Fan		478			-478
Supply Air Ducts		128			66
TOTAL SYSTEM LOAD		3,541	401		1,423

HVAC EQUIPMENT SELECTION			
Fujitsu AOUG09LMAS1/ ASUG09LMAS	8,087	0	12,000
Total Adjusted System Output (Adjusted for Peak Design conditions)	8,087	0	12,000
TIME OF SYSTEM PEAK	Aug 2 PM		Jan 1 AM

HEATING SYSTEM PSYCHROMETRICS (Airstream Temperatures at Time of Heating Peak)

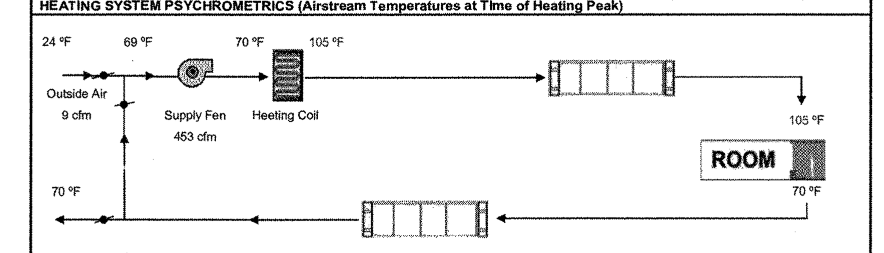

COOLING SYSTEM PSYCHROMETRICS (Airstream Temperatures at Time of Cooling Peak)

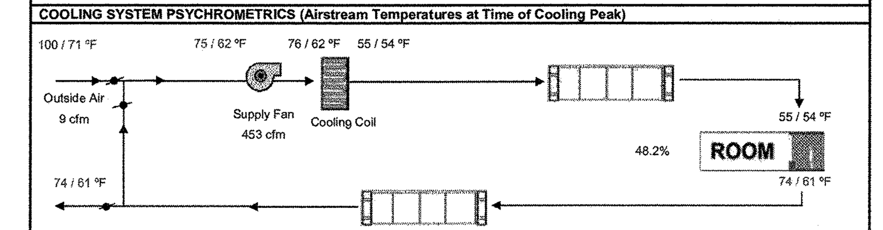

2019CBC
City of Madera
Building Department
The approval of these plans does not prevent the City of Madera from requiring correction of errors or omissions in the plans, specifications of construction. Subject to field inspections and approvals. Laws, Codes and Ordinances.
APPROVED
By:
Date: MAR 03 2022

These plans or drawings or any part of these publications are the exclusive propery of VAR, and may not be reproduced, or transmitted in any form or by means, recording, electronic, mechanical, photocoping or otherwise without written permission by VAR. Copies of these drawings are supplied to the owner or the Building contractor and, otherwise for the use of this project only. Any Re-use of these drawings or documents is prohibited without the written permission of VAR. If VAR is not awarded the project, VAR will not warranty these plans, drawings or contents and will not assume any liability or responsibility for the unauthorized use of these plans or drawings, and the plans or drawings and contents must be returned to VAR immediately.

Air Conditioning & Heating
Custom Sheet Metal
Sales & Service

VAR
Since 1970
825 S Topeka Ave
Fresno CA, 93721
559-237-3188

Signed Steve Mendrin Date 11-1821
Steve Mendrin
License #669606
Valley Air Conditioning & Repair.

Valley Air Conditioning & Repair, Inc.
VAR
Since 1970

50 Years of
Indoor comfort.

BY	REVISION	DATE

ANY INFORMATION OR DATA ON THIS DRAWING IS NOT INTENDED TO BE SUITABLE FOR REUSE BY ANY PERSON, FIRM, CORPORATION, OR ANY OTHERS ON EXTENSIONS OF THIS PROJECT OR FOR ANY USE ON ANY OTHER PROJECT. ANY REUSE WITHOUT WRITTEN VERIFICATION AND ADAPTATION BY THE ENGINEER FOR THE SPECIFIC PURPOSE INTENDED WILL BE AT THE USER'S SOLE RISK AND WITHOUT LIABILITY OR LEGAL EXPOSURE TO THE ENGINEER.

SEAL

TYPICAL MECHANICAL FLOOR PLAN

LEASE FLEX. / WAREHOUSE BUILDINGS
FOR
MADERA INDUSTRIAL WHSE, LLC
S. SCHNOOR AVENUE, MADERA, CA

JOB NUMBER	21107
DESIGNED BY	
DRAWN BY	
DATE	9/09/2021
SHEET NUMBER	M6

HVAC SYSTEM HEATING AND COOLING LOADS SUMMARY

Project Name: Madera Industrial WHSE — Date: 11/18/2021
System Name: Building A Suite #18 — Floor Area: 159

ENGINEERING CHECKS	
Number of Systems	1
Heating System	
Output per System	12,000
Total Output (Btuh)	12,000
Output (Btuh/sqft)	75.6
Cooling System	
Output per System	9,000
Total Output (Btuh)	9,000
Total Output (Tons)	0.8
Total Output (Btuh/sqft)	56.7
Total Output (sqft/Ton)	211.7
Air System	
CFM per System	453
Airflow (cfm)	453
Airflow (cfm/sqft)	2.85
Airflow (cfm/Ton)	604.0
Outside Air (%)	2.0%
Outside Air (cfm/sqft)	0.06

Note: values above given at ARI conditions

SYSTEM LOAD	COIL COOLING PEAK			COIL HTG. PEAK	
	CFM	Sensible	Latent	CFM	Sensible
Total Room Loads	128	2,557	336	35	1,319
Return Vented Lighting		0			
Return Air Ducts		128			66
Return Fan		0			0
Ventilation	9	250	65	9	449
Supply Fan		478			-478
Supply Air Ducts		128			66
TOTAL SYSTEM LOAD		3,541	401		1,423
HVAC EQUIPMENT SELECTION					
Fujitsu AOUG09LMAS1/ ASUG09LMAS		8,087	0		12,000
Total Adjusted System Output (Adjusted for Peak Design conditions)		8,087	0		12,000
TIME OF SYSTEM PEAK			Aug 2 PM		Jan 1 AM

HEATING SYSTEM PSYCHROMETRICS (Airstream Temperatures at Time of Heating Peak)

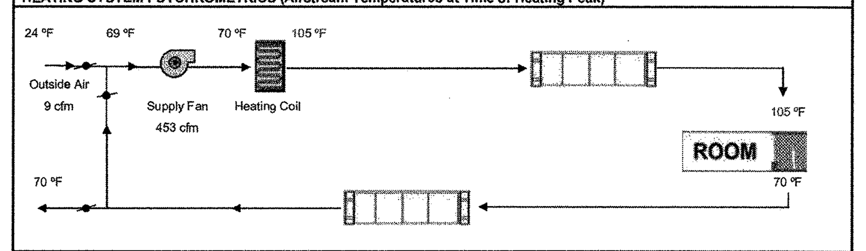

COOLING SYSTEM PSYCHROMETRICS (Airstream Temperatures at Time of Cooling Peak)

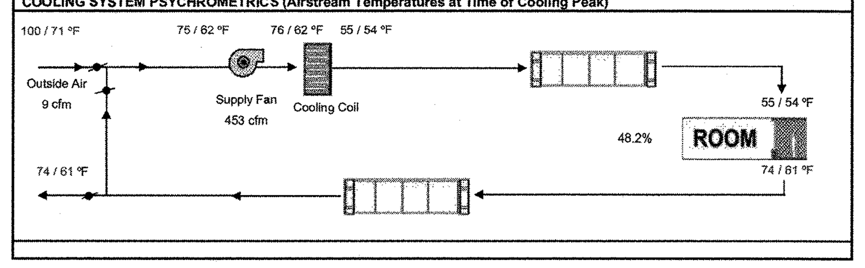

HVAC SYSTEM HEATING AND COOLING LOADS SUMMARY

Project Name: Madera Industrial WHSE — Date: 11/18/2021
System Name: Building A Suite #19 — Floor Area: 159

ENGINEERING CHECKS	
Number of Systems	1
Heating System	
Output per System	12,000
Total Output (Btuh)	12,000
Output (Btuh/sqft)	75.6
Cooling System	
Output per System	9,000
Total Output (Btuh)	9,000
Total Output (Tons)	0.8
Total Output (Btuh/sqft)	56.7
Total Output (sqft/Ton)	211.7
Air System	
CFM per System	453
Airflow (cfm)	453
Airflow (cfm/sqft)	2.85
Airflow (cfm/Ton)	604.0
Outside Air (%)	2.0%
Outside Air (cfm/sqft)	0.06

Note: values above given at ARI conditions

SYSTEM LOAD	COIL COOLING PEAK			COIL HTG. PEAK	
	CFM	Sensible	Latent	CFM	Sensible
Total Room Loads	139	2,785	336	45	1,660
Return Vented Lighting		0			
Return Air Ducts		139			83
Return Fan		0			0
Ventilation	9	250	65	9	449
Supply Fan		478			-478
Supply Air Ducts		139			83
TOTAL SYSTEM LOAD		3,791	401		1,798
HVAC EQUIPMENT SELECTION					
Fujitsu AOUG09LMAS1/ ASUG09LMAS		8,088	0		12,000
Total Adjusted System Output (Adjusted for Peak Design conditions)		8,088	0		12,000
TIME OF SYSTEM PEAK			Aug 2 PM		Jan 1 AM

HEATING SYSTEM PSYCHROMETRICS (Airstream Temperatures at Time of Heating Peak)

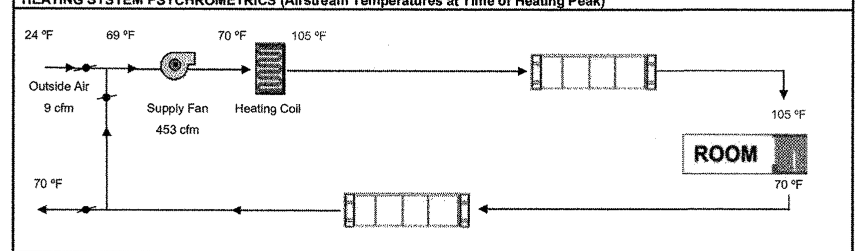

COOLING SYSTEM PSYCHROMETRICS (Airstream Temperatures at Time of Cooling Peak)

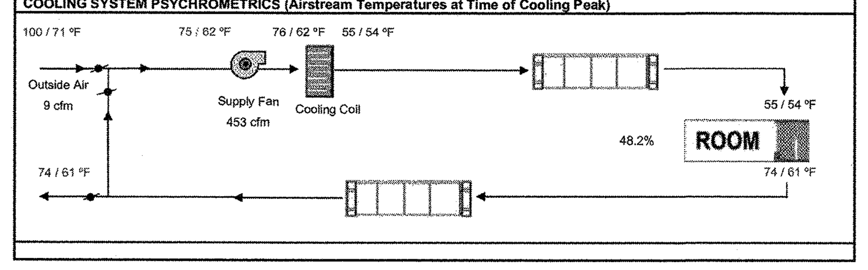

HVAC SYSTEM HEATING AND COOLING LOADS SUMMARY

Project Name: Madera Industrial WHSE — Date: 11/18/2021
System Name: Building B Suite #1 — Floor Area: 159

ENGINEERING CHECKS	
Number of Systems	1
Heating System	
Output per System	12,000
Total Output (Btuh)	12,000
Output (Btuh/sqft)	75.6
Cooling System	
Output per System	9,000
Total Output (Btuh)	9,000
Total Output (Tons)	0.8
Total Output (Btuh/sqft)	56.7
Total Output (sqft/Ton)	211.7
Air System	
CFM per System	453
Airflow (cfm)	453
Airflow (cfm/sqft)	2.85
Airflow (cfm/Ton)	604.0
Outside Air (%)	2.0%
Outside Air (cfm/sqft)	0.06

Note: values above given at ARI conditions

SYSTEM LOAD	COIL COOLING PEAK			COIL HTG. PEAK	
	CFM	Sensible	Latent	CFM	Sensible
Total Room Loads	125	2,503	336	45	1,660
Return Vented Lighting		0			
Return Air Ducts		125			83
Return Fan		0			0
Ventilation	9	262	65	9	449
Supply Fan		478			-478
Supply Air Ducts		125			83
TOTAL SYSTEM LOAD		3,493	401		1,798
HVAC EQUIPMENT SELECTION					
Fujitsu AOUG09LMAS1/ ASUG09LMAS		8,039	0		12,000
Total Adjusted System Output (Adjusted for Peak Design conditions)		8,039	0		12,000
TIME OF SYSTEM PEAK			Jul 3 PM		Jan 1 AM

HEATING SYSTEM PSYCHROMETRICS (Airstream Temperatures at Time of Heating Peak)

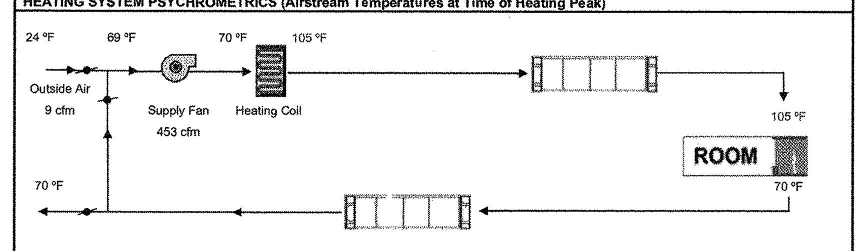

COOLING SYSTEM PSYCHROMETRICS (Airstream Temperatures at Time of Cooling Peak)

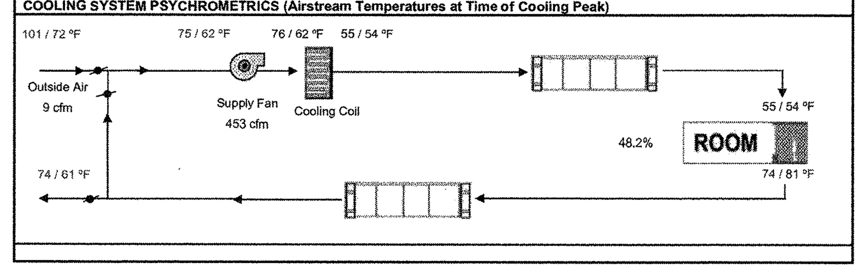

HVAC SYSTEM HEATING AND COOLING LOADS SUMMARY

Project Name: Madera Industrial WHSE — Date: 11/18/2021
System Name: Building B Suite #2 — Floor Area: 159

ENGINEERING CHECKS	
Number of Systems	1
Heating System	
Output per System	12,000
Total Output (Btuh)	12,000
Output (Btuh/sqft)	75.6
Cooling System	
Output per System	9,000
Total Output (Btuh)	9,000
Total Output (Tons)	0.8
Total Output (Btuh/sqft)	56.7
Total Output (sqft/Ton)	211.7
Air System	
CFM per System	453
Airflow (cfm)	453
Airflow (cfm/sqft)	2.85
Airflow (cfm/Ton)	604.0
Outside Air (%)	2.0%
Outside Air (cfm/sqft)	0.06

Note: values above given at ARI conditions

SYSTEM LOAD	COIL COOLING PEAK			COIL HTG. PEAK	
	CFM	Sensible	Latent	CFM	Sensible
Total Room Loads	128	2,557	336	35	1,319
Return Vented Lighting		0			
Return Air Ducts		128			66
Return Fan		0			0
Ventilation	9	250	65	9	449
Supply Fan		478			-478
Supply Air Ducts		128			86
TOTAL SYSTEM LOAD		3,541	401		1,423
HVAC EQUIPMENT SELECTION					
Fujitsu AOUG09LMAS1/ ASUG09LMAS		8,087	0		12,000
Total Adjusted System Output (Adjusted for Peak Design conditions)		8,087	0		12,000
TIME OF SYSTEM PEAK			Aug 2 PM		Jan 1 AM

HEATING SYSTEM PSYCHROMETRICS (Airstream Temperatures at Time of Heating Peak)

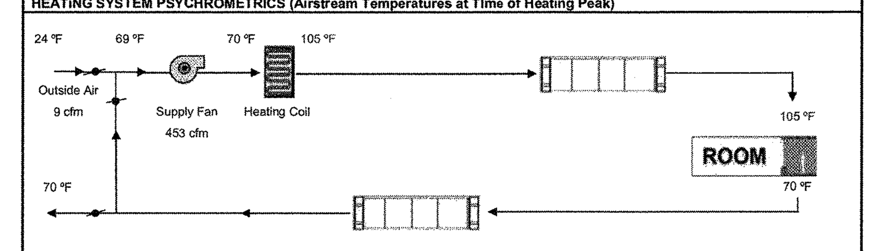

COOLING SYSTEM PSYCHROMETRICS (Airstream Temperatures at Time of Cooling Peak)

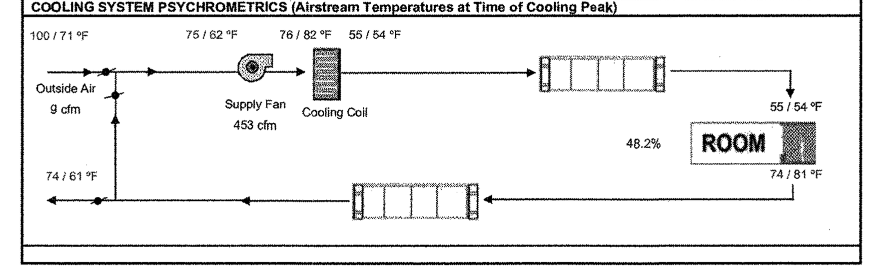

HVAC SYSTEM HEATING AND COOLING LOADS SUMMARY

Project Name: Madera Industrial WHSE — Date: 11/18/2021
System Name: Building B Suite #3 — Floor Area: 159

ENGINEERING CHECKS	
Number of Systems	1
Heating System	
Output per System	12,000
Total Output (Btuh)	12,000
Output (Btuh/sqft)	75.6
Cooling System	
Output per System	9,000
Total Output (Btuh)	9,000
Total Output (Tons)	0.8
Total Output (Btuh/sqft)	56.7
Total Output (sqft/Ton)	211.7
Air System	
CFM per System	453
Airflow (cfm)	453
Airflow (cfm/sqft)	2.85
Airflow (cfm/Ton)	604.0
Outside Air (%)	2.0%
Outside Air (cfm/sqft)	0.08

Note: values above given at ARI conditions

SYSTEM LOAD	COIL COOLING PEAK			COIL HTG. PEAK	
	CFM	Sensible	Latent	CFM	Sensible
Total Room Loads	113	2,277	336	35	1,319
Return Vented Lighting		0			
Return Air Ducts		114			66
Return Fan		0			0
Ventilation	9	250	65	9	449
Supply Fan		478			-478
Supply Air Ducts		114			86
TOTAL SYSTEM LOAD		3,233	401		1,423
HVAC EQUIPMENT SELECTION					
Fujitsu AOUG09LMAS1/ ASUG09LMAS		8,086	0		12,000
Total Adjusted System Output (Adjusted for Peak Design conditions)		8,086	0		12,000
TIME OF SYSTEM PEAK			Jul 2 PM		Jan 1 AM

HEATING SYSTEM PSYCHROMETRICS (Airstream Temperatures at Time of Heating Peak)

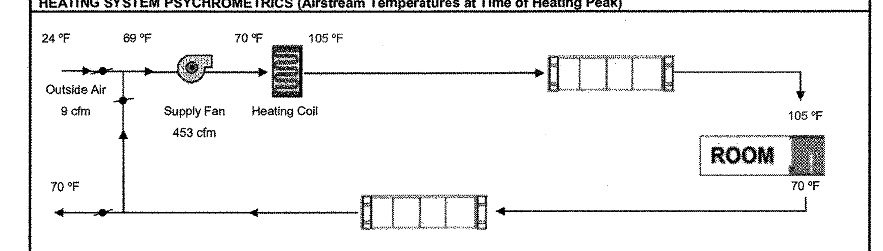

COOLING SYSTEM PSYCHROMETRICS (Airstream Temperatures at Time of Cooling Peak)

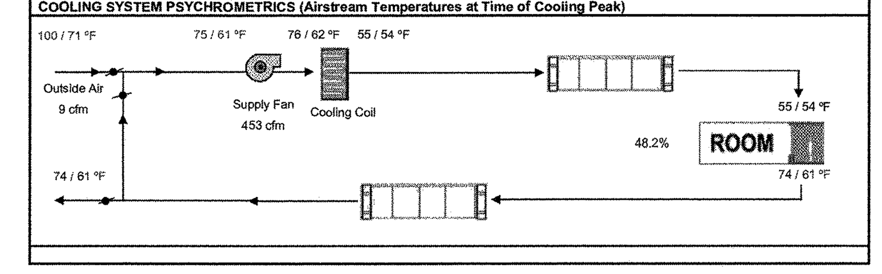

HVAC SYSTEM HEATING AND COOLING LOADS SUMMARY

Project Name: Madera Industrial WHSE — Date: 11/18/2021
System Name: Building B Suite #4 — Floor Area: 159

ENGINEERING CHECKS	
Number of Systems	1
Heating System	
Output per System	12,000
Total Output (Btuh)	12,000
Output (Btuh/sqft)	75.6
Cooling System	
Output per System	9,000
Total Output (Btuh)	9,000
Total Output (Tons)	0.8
Total Output (Btuh/sqft)	56.7
Total Output (sqft/Ton)	211.7
Air System	
CFM per System	453
Airflow (cfm)	453
Airflow (cfm/sqft)	2.85
Airflow (cfm/Ton)	604.0
Outside Air (%)	2.0%
Outside Air (cfm/sqft)	0.06

Note: values above given at ARI conditions

SYSTEM LOAD	COIL COOLING PEAK			COIL HTG. PEAK	
	CFM	Sensible	Latent	CFM	Sensible
Total Room Loads	113	2,277	336	35	1,319
Return Vented Lighting		0			
Return Air Ducts		114			86
Return Fan		0			0
Ventilation	9	250	65	9	449
Supply Fan		478			-478
Supply Air Ducts		114			68
TOTAL SYSTEM LOAD		3,233	401		1,423
HVAC EQUIPMENT SELECTION					
Fujitsu AOUG09LMAS1/ ASUG09LMAS		8,086	0		12,000
Total Adjusted System Output (Adjusted for Peak Design conditions)		8,088	0		12,000
TIME OF SYSTEM PEAK			Jul 2 PM		Jan 1 AM

HEATING SYSTEM PSYCHROMETRICS (Airstream Temperatures at Time of Heating Peak)

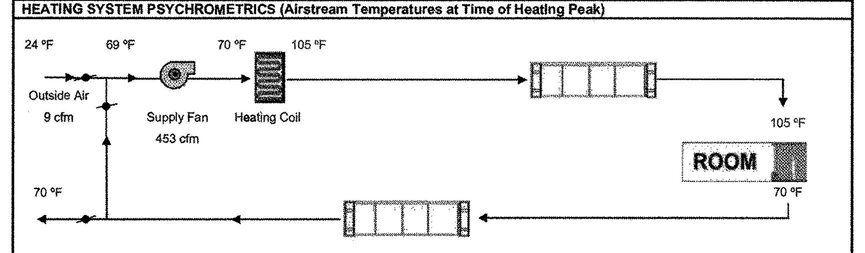

COOLING SYSTEM PSYCHROMETRICS (Airstream Temperatures at Time of Cooling Peak)

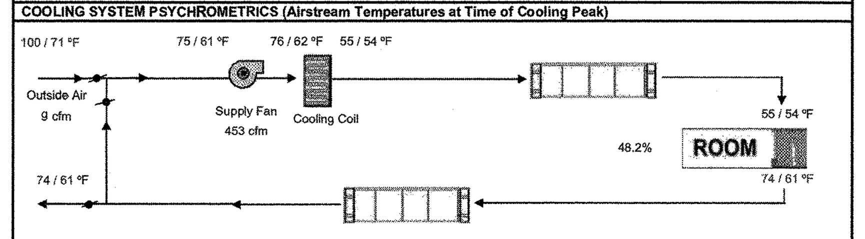

HVAC SYSTEM HEATING AND COOLING LOADS SUMMARY

Project Name: Madera Industrial WHSE — Date: 11/18/2021
System Name: Building B Suite #5 — Floor Area: 159

ENGINEERING CHECKS	
Number of Systems	1
Heating System	
Output per System	12,000
Total Output (Btuh)	12,000
Output (Btuh/sqft)	75.6
Cooling System	
Output per System	9,000
Total Output (Btuh)	9,000
Total Output (Tons)	0.8
Total Output (Btuh/sqft)	56.7
Total Output (sqft/Ton)	211.7
Air System	
CFM per System	453
Airflow (cfm)	453
Airflow (cfm/sqft)	2.85
Airflow (cfm/Ton)	604.0
Outside Air (%)	2.0%
Outside Air (cfm/sqft)	0.06

Note: values above given at ARI conditions

SYSTEM LOAD	COIL COOLING PEAK			COIL HTG. PEAK	
	CFM	Sensible	Latent	CFM	Sensible
Total Room Loads	113	2,277	336	35	1,319
Return Vented Lighting		0			
Return Air Ducts		114			66
Return Fan		0			0
Ventilation	9	250	65	9	449
Supply Fan		478			-478
Supply Air Ducts		114			66
TOTAL SYSTEM LOAD		3,233	401		1,423
HVAC EQUIPMENT SELECTION					
Fujitsu AOUG09LMAS1/ ASUG09LMAS		8,086	0		12,000
Total Adjusted System Output (Adjusted for Peak Design conditions)		8,086	0		12,000
TIME OF SYSTEM PEAK			Jul 2 PM		Jan 1 AM

HEATING SYSTEM PSYCHROMETRICS (Airstream Temperatures at Time of Heating Peak)

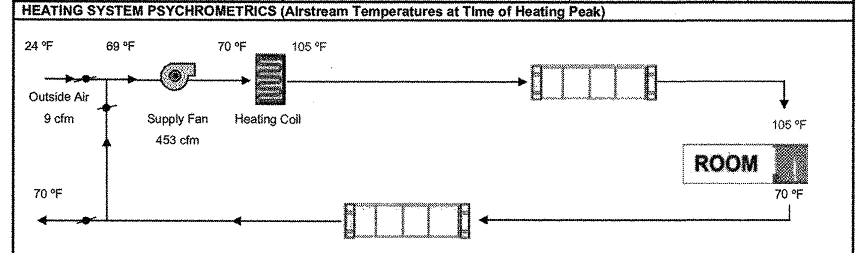

COOLING SYSTEM PSYCHROMETRICS (Airstream Temperatures at Time of Cooling Peak)

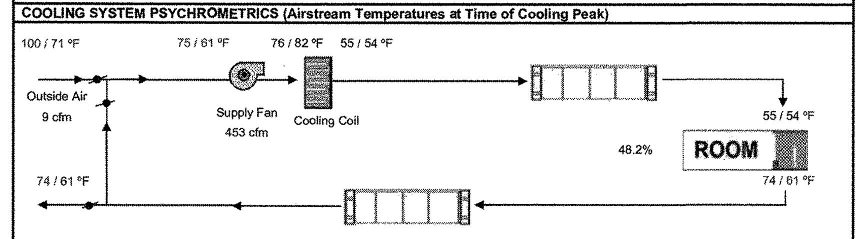

HVAC SYSTEM HEATING AND COOLING LOADS SUMMARY

Project Name: Madera Industrial WHSE — Date: 11/18/2021
System Name: Building B Suite #6 — Floor Area: 159

ENGINEERING CHECKS	
Number of Systems	1
Haating System	
Output per System	12,000
Total Output (Btuh)	12,000
Output (Btuh/sqft)	75.6
Cooling System	
Output per System	9,000
Total Output (Btuh)	9,000
Total Output (Tons)	0.8
Total Output (Btuh/sqft)	56.7
Total Output (sqft/Ton)	211.7
Air System	
CFM per System	453
Airflow (cfm)	453
Airflow (cfm/sqft)	2.85
Airflow (cfm/Ton)	604.0
Outside Air (%)	2.0%
Outside Air (cfm/sqft)	0.06

Note: values above given at ARI conditions

SYSTEM LOAD	COIL COOLING PEAK			COIL HTG. PEAK	
	CFM	Sensible	Latent	CFM	Sensible
Total Room Loads	113	2,277	336	35	1,319
Return Vented Lighting		0			
Return Air Ducts		114			66
Return Fan		0			0
Ventilation	9	250	65	9	449
Supply Fan		478			-478
Supply Air Ducts		114			66
TOTAL SYSTEM LOAD		3,233	401		1,423
HVAC EQUIPMENT SELECTION					
Fujitsu AOUG09LMAS1/ ASUG09LMAS		8,086	0		12,000
Total Adjusted System Output (Adjusted for Peak Design conditions)		8,086	0		12,000
TIME OF SYSTEM PEAK			Jul 2 PM		Jan 1 AM

HEATING SYSTEM PSYCHROMETRICS (Airstream Temperatures at Time of Heating Peak)

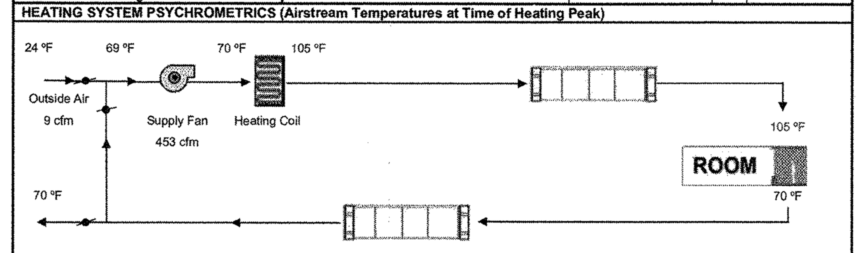

COOLING SYSTEM PSYCHROMETRICS (Airstream Temperatures at Time of Cooling Peak)

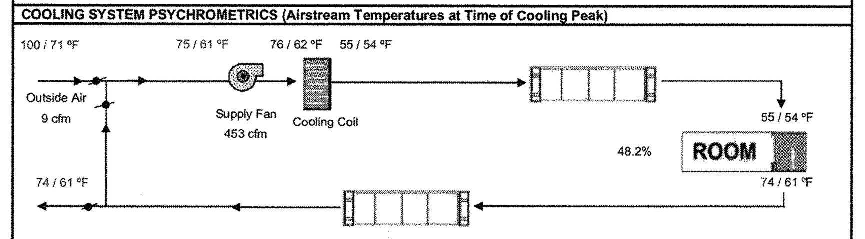

HVAC SYSTEM HEATING AND COOLING LOADS SUMMARY

Project Name: Madera Industrial WHSE — Date: 11/18/2021
System Name: Building B Suite #7 — Floor Area: 159

ENGINEERING CHECKS	
Number of Systems	1
Heating System	
Output per System	12,000
Total Output (Btuh)	12,000
Output (Btuh/sqft)	75.6
Cooling System	
Output per System	9,000
Total Output (Btuh)	9,000
Total Output (Tons)	0.8
Total Output (Btuh/sqft)	58.7
Total Output (sqft/Ton)	211.7
Air System	
CFM per System	453
Airflow (cfm)	453
Airflow (cfm/sqft)	2.85
Airflow (cfm/Ton)	804.0
Outside Air (%)	2.0%
Outside Air (cfm/sqft)	0.06

Note: values above given at ARI conditions

SYSTEM LOAD	COIL COOLING PEAK			COIL HTG. PEAK	
	CFM	Sensible	Latent	CFM	Sensible
Total Room Loads	113	2,277	336	35	1,319
Return Vented Lighting		0			
Return Air Ducts		114			66
Return Fan		0			0
Ventilation	9	250	65	9	449
Supply Fan		478			-478
Supply Air Ducts		114			66
TOTAL SYSTEM LOAD		3,233	401		1,423
HVAC EQUIPMENT SELECTION					
Fujitsu AOUG09LMAS1/ ASUG09LMAS		8,086	0		12,000
Total Adjusted System Output (Adjusted for Peak Design conditions)		8,086	0		12,000
TIME OF SYSTEM PEAK			Jul 2 PM		Jan 1 AM

HEATING SYSTEM PSYCHROMETRICS (Airstream Temperatures at Time of Heating Peak)

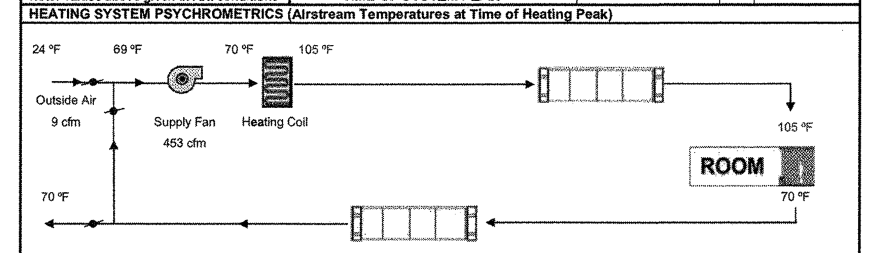

COOLING SYSTEM PSYCHROMETRICS (Airstream Temperatures at Time of Cooling Peak)

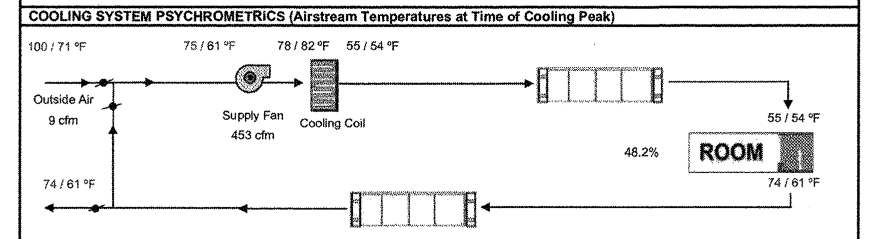

HVAC SYSTEM HEATING AND COOLING LOADS SUMMARY

Project Name: Madera Industrial WHSE — Date: 11/18/2021
System Name: Building B Suite #8 — Floor Area: 159

ENGINEERING CHECKS	
Number of Systems	1
Heating System	
Output per System	12,000
Total Output (Btuh)	12,000
Output (Btuh/sqft)	75.6
Cooling System	
Output per System	9,000
Total Output (Btuh)	9,000
Total Output (Tons)	0.8
Total Output (Btuh/sqft)	56.7
Total Output (sqft/Ton)	211.7
Air System	
CFM per System	453
Airflow (cfm)	453
Airflow (cfm/sqft)	2.85
Airflow (cfm/Ton)	604.0
Outside Air (%)	2.0%
Outside Air (cfm/sqft)	0.06

Note: values above given at ARI conditions

SYSTEM LOAD	COIL COOLING PEAK			COIL HTG. PEAK	
	CFM	Sensible	Latent	CFM	Sensible
Total Room Loads	113	2,277	336	35	1,319
Return Vented Lighting		0			
Return Air Ducts		114			66
Return Fan		0			0
Ventilation	9	250	65	9	449
Supply Fan		478			-478
Supply Air Ducts		114			88
TOTAL SYSTEM LOAD		3,233	401		1,423
HVAC EQUIPMENT SELECTION					
Fujitsu AOUG09LMAS1/ ASUG09LMAS		8,086	0		12,000
Total Adjusted Systam Output (Adjusted for Peak Design conditions)		8,086	0		12,000
TIME OF SYSTEM PEAK			Jul 2 PM		Jan 1 AM

HEATING SYSTEM PSYCHROMETRICS (Airstraam Temperatures at Time of Heating Peak)

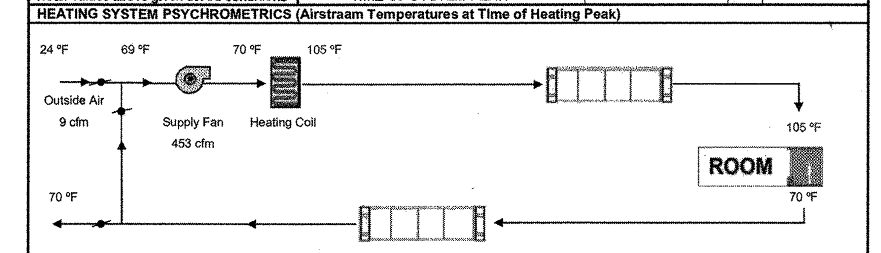

COOLING SYSTEM PSYCHROMETRICS (Airstream Temperatures at Time of Cooling Peak)

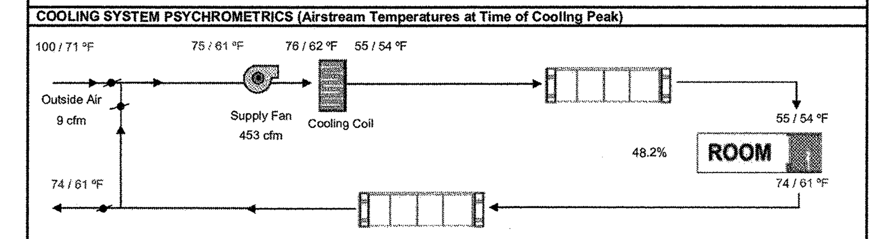

2019CBC
City of Madera
Building Department
The approval of these plans does not prevent the City of Madera from requiring correction of errors or omissions in the plans, specifications of construction. Subject to field inspections and approvals. Laws, Codes and Ordinances
APPROVED
By:
Date: MAR 0 3 2022

These plans or drawings or any part of these publications are the exclusive propery of VAR, and may not be reproduced, or transmitted in any form or by means, recording, electronic, mechanical, photocoping or otherwise without written permission by VAR. Copies of these drawings are supplied to the owner or the Building contractor and, otherwise for the use of this project only. Any Re-use of these drawings or documents is prohibited without the written permission of VAR. If VAR is not awarded the project, VAR will not warranty these plans, drawings or contents and will not assume any liability or responsibility for the unauthorized use of these plans or drawings, and the plans or drawings and contents must be returned to VAR immediately.

VAR
Since 1970
825 S Topeka Ave
Fresno CA, 93721
559-237-3188

Valley Air Conditioning & Repair, Inc. — VAR — Since 1970

50 Years of Indoor comfort.

Air Conditioning & Heating
Custom Sheet Metal
Sales & Service

Signed Steve Mendrin Date 11-18-21
Steve Mendrin
License #689608
Valley Air Conditioning & Repair.

DATE	REVISION	BY

SEAL

ANY INFORMATION OR DATA ON THIS DRAWING IS NOT INTENDED TO BE SUITABLE FOR REUSE BY ANY PERSON, FIRM, CORPORATION, OR ANY OTHERS ON EXTENSIONS OF THIS PROJECT OR FOR ANY USE ON ANY OTHER PROJECT. ANY REUSE WITHOUT WRITTEN VERIFICATION AND ADAPTATION BY THE ENGINEER FOR THE SPECIFIC PURPOSE INTENDED WILL BE AT THE USER'S SOLE RISK AND WITHOUT LIABILITY OR LEGAL EXPOSURE TO THE ENGINEER.

TYPICAL MECHANICAL FLOOR PLAN

LEASE FLEX. / WAREHOUSE BUILDINGS
FOR
MADERA INDUSTRIAL WHSE, LLC
S. SCHNOOR AVENUE, MADERA, CA

JOB NUMBER: 21107
DESIGNED BY:
DRAWN BY:
DATE: 9/09/2021
SHEET NUMBER: M7

HVAC SYSTEM HEATING AND COOLING LOADS SUMMARY

Project Name: Madera Industrial WHSE | Date: 11/18/2021
System Name: Building B Suite #9 | Floor Area: 159

ENGINEERING CHECKS	
Number of Systems	1
Heating System	
Output per System	12,000
Total Output (Btuh)	12,000
Output (Btuh/sqft)	75.6
Cooling System	
Output per System	9,000
Total Output (Btuh)	9,000
Total Output (Tons)	0.8
Total Output (Btuh/sqft)	56.7
Total Output (sqft/Ton)	211.7
Air System	
CFM per System	453
Airflow (cfm)	453
Airflow (cfm/sqft)	2.85
Airflow (cfm/Ton)	604.0
Outside Air (%)	2.0%
Outside Air (cfm/sqft)	0.06
Note: values above given at ARI conditions	

SYSTEM LOAD	COIL COOLING PEAK			COIL HTG. PEAK	
	CFM	Sensible	Latent	CFM	Sensible
Total Room Loads	113	2,277	336	35	1,319
Return Vented Lighting		0			
Return Air Ducts		114			66
Return Fan		0			0
Ventilation	9	250	65	9	449
Supply Fan		478			-478
Supply Air Ducts		114			86
TOTAL SYSTEM LOAD		3,233	401		1,423
HVAC EQUIPMENT SELECTION					
Fujitsu AOUG09LMAS1/ ASUG09LMAS		8,086	0		12,000
Total Adjusted System Output (Adjusted for Peak Design conditions)		8,086	0		12,000
TIME OF SYSTEM PEAK		Jul 2 PM			Jan 1 AM

HEATING SYSTEM PSYCHROMETRICS (Airstream Temperatures at Time of Heating Peak)

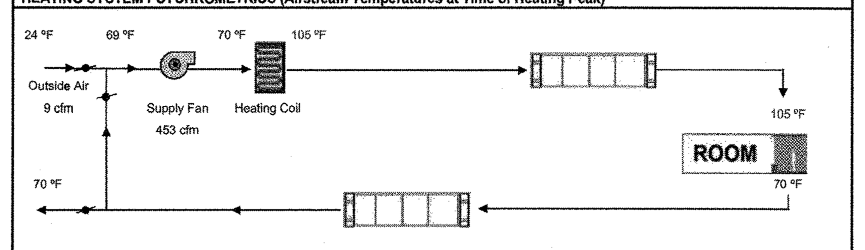

COOLING SYSTEM PSYCHROMETRICS (Airstream Temperatures at Time of Cooling Peak)

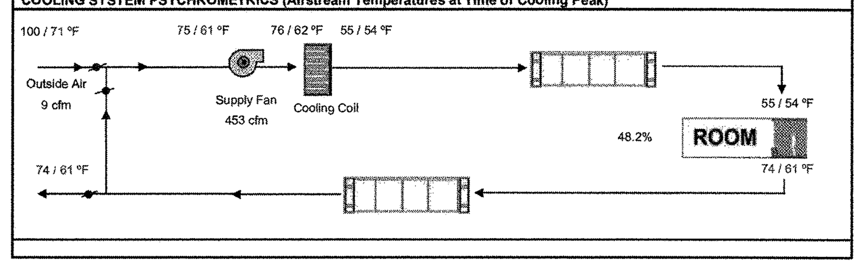

HVAC SYSTEM HEATING AND COOLING LOADS SUMMARY

Project Name: Madera Industrial WHSE | Date: 11/18/2021
System Name: Building B Suite #10 | Floor Area: 159

ENGINEERING CHECKS	
Number of Systems	1
Heating System	
Output per System	12,000
Total Output (Btuh)	12,000
Output (Btuh/sqft)	75.6
Cooling System	
Output per System	9,000
Total Output (Btuh)	9,000
Total Output (Tons)	0.8
Total Output (Btuh/sqft)	56.7
Total Output (sqft/Ton)	211.7
Air System	
CFM per System	453
Airflow (cfm)	453
Airflow (cfm/sqft)	2.85
Airflow (cfm/Ton)	604.0
Outside Air (%)	2.0%
Outside Air (cfm/sqft)	0.06
Note: values above given at ARI conditions	

SYSTEM LOAD	COIL COOLING PEAK			COIL HTG. PEAK	
	CFM	Sensible	Latent	CFM	Sensible
Total Room Loads	113	2,277	336	35	1,319
Return Vented Lighting		0			
Return Air Ducts		114			66
Return Fan		0			0
Ventilation	9	250	65	9	449
Supply Fan		478			-478
Supply Air Ducts		114			66
TOTAL SYSTEM LOAD		3,233	401		1,423
HVAC EQUIPMENT SELECTION					
Fujitsu AOUG09LMAS1/ ASUG09LMAS		8,086	0		12,000
Total Adjusted System Output (Adjusted for Peak Design conditions)		8,088	0		12,000
TIME OF SYSTEM PEAK		Jul 2 PM			Jan 1 AM

HEATING SYSTEM PSYCHROMETRICS (Airstream Temperatures at Time of Heating Peak)

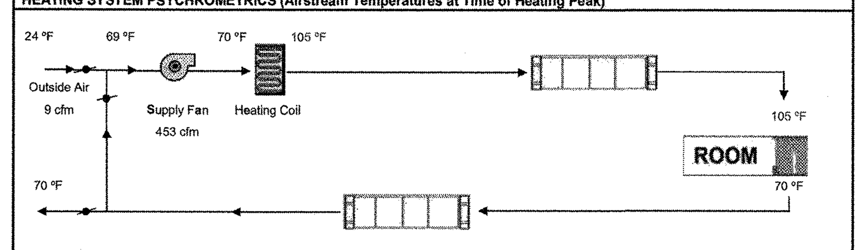

COOLING SYSTEM PSYCHROMETRICS (Airstream Temperatures at Time of Cooling Peak)

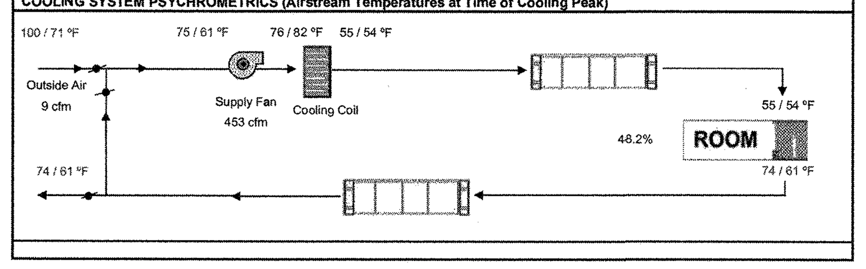

HVAC SYSTEM HEATING AND COOLING LOADS SUMMARY

Project Name: Madera Industrial WHSE | Date: 11/18/2021
System Name: Building B Suite #11 | Floor Area: 159

ENGINEERING CHECKS	
Number of Systems	1
Heating System	
Output per System	12,000
Total Output (Btuh)	12,000
Output (Btuh/sqft)	75.6
Cooling System	
Output per System	9,000
Total Output (Btuh)	9,000
Total Output (Tons)	0.8
Total Output (Btuh/sqft)	58.7
Total Output (sqft/Ton)	211.7
Air System	
CFM per System	453
Airflow (cfm)	453
Airflow (cfm/sqft)	2.85
Airflow (cfm/Ton)	604.0
Outside Air (%)	2.0%
Outside Air (cfm/sqft)	0.06
Note: values above given at ARI conditions	

SYSTEM LOAD	COIL COOLING PEAK			COIL HTG. PEAK	
	CFM	Sensible	Latent	CFM	Sensible
Total Room Loads	113	2,277	336	35	1,319
Return Vented Lighting		0			
Return Air Ducts		114			66
Return Fan		0			0
Ventilation	9	250	65	9	449
Supply Fan		478			-478
Supply Air Ducts		114			86
TOTAL SYSTEM LOAD		3,233	401		1,423
HVAC EQUIPMENT SELECTION					
Fujitsu AOUG09LMAS1/ ASUG09LMAS		8,086	0		12,000
Total Adjusted System Output (Adjusted for Peak Design conditions)		8,086	0		12,000
TIME OF SYSTEM PEAK		Jul 2 PM			Jan 1 AM

HEATING SYSTEM PSYCHROMETRICS (Airstream Temperatures at Time of Heating Peak)

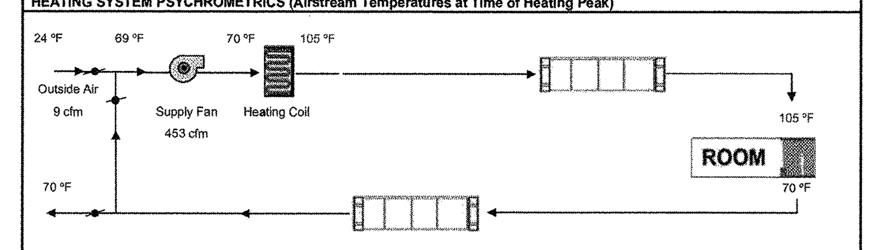

COOLING SYSTEM PSYCHROMETRICS (Airstream Temperatures at Time of Cooling Peak)

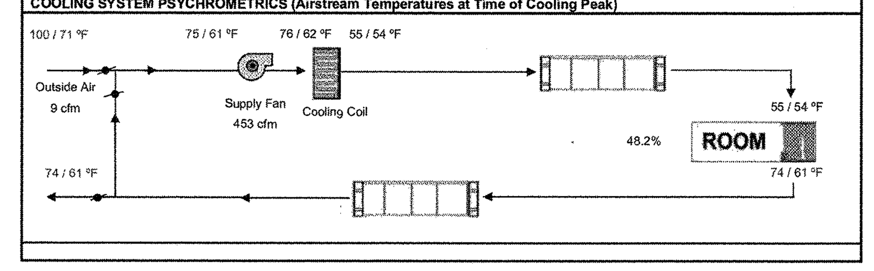

HVAC SYSTEM HEATING AND COOLING LOADS SUMMARY

Project Name: Madera Industrial WHSE | Date: 11/18/2021
System Name: Building B Suite #12 | Floor Area: 159

ENGINEERING CHECKS	
Number of Systems	1
Heating System	
Output per System	12,000
Total Output (Btuh)	12,000
Output (Btuh/sqft)	75.6
Cooling System	
Output per System	9,000
Total Output (Btuh)	9,000
Total Output (Tons)	0.8
Total Output (Btuh/sqft)	56.7
Total Output (sqft/Ton)	211.7
Air System	
CFM per System	453
Airflow (cfm)	453
Airflow (cfm/sqft)	2.85
Airflow (cfm/Ton)	604.0
Outside Air (%)	2.0%
Outside Air (cfm/sqft)	0.06
Note: values above given at ARI conditions	

SYSTEM LOAD	COIL COOLING PEAK			COIL HTG. PEAK	
	CFM	Sensible	Latent	CFM	Sensible
Total Room Loads	113	2,277	336	35	1,319
Return Vented Lighting		0			
Return Air Ducts		114			66
Return Fan		0			0
Ventilation	9	250	65	9	449
Supply Fan		478			-478
Supply Air Ducts		114			66
TOTAL SYSTEM LOAD		3,233	401		1,423
HVAC EQUIPMENT SELECTION					
Fujitsu AOUG09LMAS1/ ASUG09LMAS		8,086	0		12,000
Total Adjusted System Output (Adjusted for Peak Design conditions)		8,086	0		12,000
TIME OF SYSTEM PEAK		Jul 2 PM			Jan 1 AM

HEATING SYSTEM PSYCHROMETRICS (Airstream Temperatures at Time of Heating Peak)

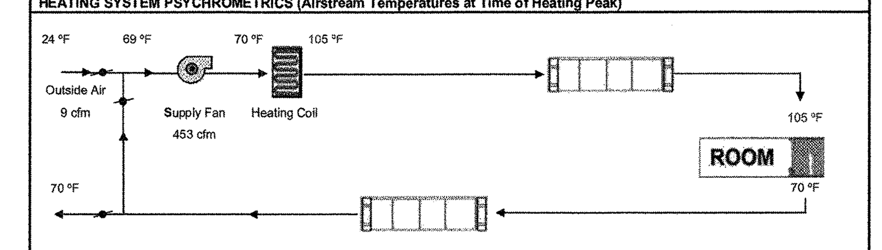

COOLING SYSTEM PSYCHROMETRICS (Airstream Temperatures at Time of Cooling Peak)

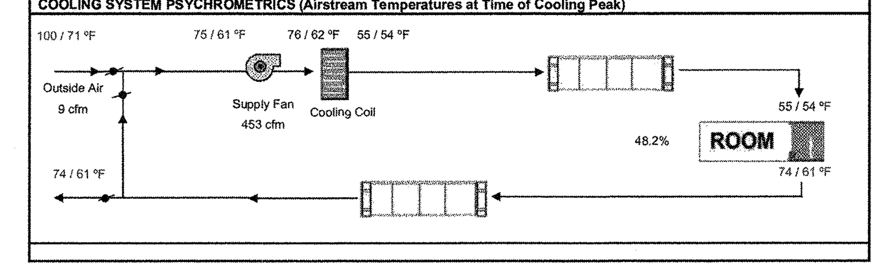

HVAC SYSTEM HEATING AND COOLING LOADS SUMMARY

Project Name: Madera Industrial WHSE | Date: 11/18/2021
System Name: Building B Suite #13 | Floor Area: 159

ENGINEERING CHECKS	
Number of Systems	1
Heating System	
Output per System	12,000
Total Output (Btuh)	12,000
Output (Btuh/sqft)	75.6
Cooling System	
Output per System	9,000
Total Output (Btuh)	9,000
Total Output (Tons)	0.8
Total Output (Btuh/sqft)	56.7
Total Output (sqft/Ton)	211.7
Air System	
CFM per System	453
Airflow (cfm)	453
Airflow (cfm/sqft)	2.85
Airflow (cfm/Ton)	804.0
Outside Air (%)	2.0%
Outside Air (cfm/sqft)	0.06
Note: values above given at ARI conditions	

SYSTEM LOAD	COIL COOLING PEAK			COIL HTG. PEAK	
	CFM	Sensible	Latent	CFM	Sensible
Total Room Loads	113	2,277	336	35	1,319
Return Vented Lighting		0			
Return Air Ducts		114			66
Return Fan		0			0
Ventilation	9	250	65	9	449
Supply Fan		478			-478
Supply Air Ducts		114			66
TOTAL SYSTEM LOAD		3,233	401		1,423
HVAC EQUIPMENT SELECTION					
Fujitsu AOUG09LMAS1/ ASUG09LMAS		8,086	0		12,000
Total Adjusted System Output (Adjusted for Peak Design conditions)		8,086	0		12,000
TIME OF SYSTEM PEAK		Jul 2 PM			Jan 1 AM

HEATING SYSTEM PSYCHROMETRICS (Airstream Temperatures at Time of Heating Peak)

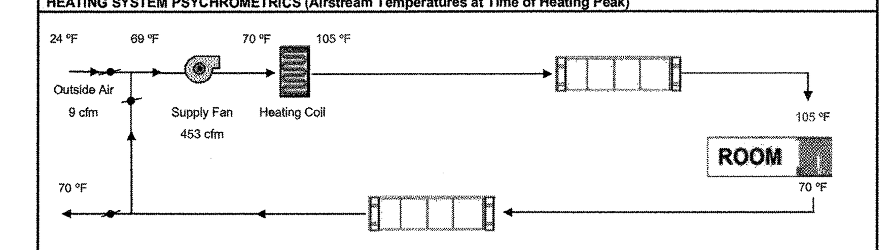

COOLING SYSTEM PSYCHROMETRICS (Airstream Temperatures at Time of Cooling Peak)

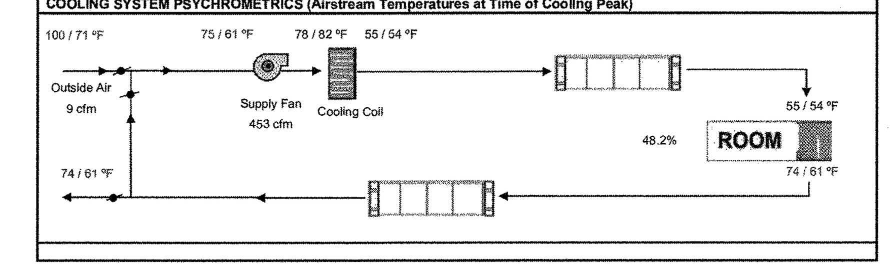

HVAC SYSTEM HEATING AND COOLING LOADS SUMMARY

Project Name: Madera Industrial WHSE | Date: 11/18/2021
System Name: Building B Suite #14 | Floor Area: 159

ENGINEERING CHECKS	
Number of Systems	1
Heating System	
Output per System	12,000
Total Output (Btuh)	12,000
Output (Btuh/sqft)	75.6
Cooling System	
Output per System	9,000
Total Output (Btuh)	9,000
Total Output (Tons)	0.8
Total Output (Btuh/sqft)	56.7
Total Output (sqft/Ton)	211.7
Air System	
CFM per System	453
Airflow (cfm)	453
Airflow (cfm/sqft)	2.85
Airflow (cfm/Ton)	604.0
Outside Air (%)	2.0%
Outside Air (cfm/sqft)	0.06
Note: values above given et ARI conditions	

SYSTEM LOAD	COIL COOLING PEAK			COIL HTG. PEAK	
	CFM	Sensible	Latent	CFM	Sensible
Total Room Loads	113	2,277	336	35	1,319
Return Vented Lighting		0			
Return Air Ducts		114			66
Return Fan		0			0
Ventilation	9	250	65	9	449
Supply Fan		478			-478
Supply Air Ducts		114			66
TOTAL SYSTEM LOAD		3,233	401		1,423
HVAC EQUIPMENT SELECTION					
Fujitsu AOUG09LMAS1/ ASUG09LMAS		8,088	0		12,000
Total Adjusted System Output (Adjusted for Peak Design conditions)		8,086	0		12,000
TIME OF SYSTEM PEAK		Jul 2 PM			Jan 1 AM

HEATING SYSTEM PSYCHROMETRICS (Airstream Temperatures at Time of Heating Peak)

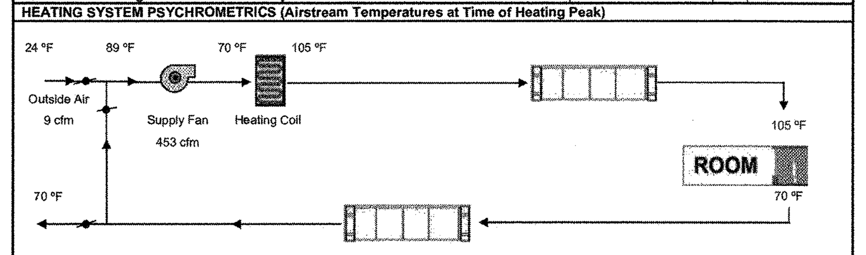

COOLING SYSTEM PSYCHROMETRICS (Airstream Temperatures at Time of Cooling Peak)

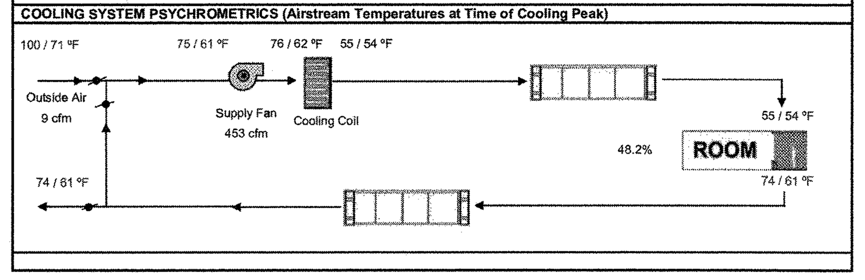

HVAC SYSTEM HEATING AND COOLING LOADS SUMMARY

Project Name: Madera Industrial WHSE | Date: 11/18/2021
System Name: Building B Suite #15 | Floor Area: 159

ENGINEERING CHECKS	
Number of Systems	1
Heating System	
Output per System	12,000
Total Output (Btuh)	12,000
Output (Btuh/sqft)	75.6
Cooling System	
Output per System	9,000
Total Output (Btuh)	9,000
Total Output (Tons)	0.8
Total Output (Btuh/sqft)	56.7
Total Output (sqft/Ton)	211.7
Air System	
CFM per System	453
Airflow (cfm)	453
Airflow (cfm/sqft)	2.85
Airflow (cfm/Ton)	604.0
Outside Air (%)	2.0%
Outside Air (cfm/sqft)	0.06
Note: values above given at ARI conditions	

SYSTEM LOAD	COIL COOLING PEAK			COIL HTG. PEAK	
	CFM	Sensible	Latent	CFM	Sensible
Total Room Loads	128	2,557	336	35	1,319
Return Vented Lighting		0			
Return Air Ducts		128			66
Return Fan		0			0
Ventilation	9	250	65	9	449
Supply Fan		478			-478
Supply Air Ducts		128			66
TOTAL SYSTEM LOAD		3,541	401		1,423
HVAC EQUIPMENT SELECTION					
Fujitsu AOUG09LMAS1/ ASUG09LMAS		8,087	0		12,000
Total Adjusted System Output (Adjusted for Peak Design conditions)		8,087	0		12,000
TIME OF SYSTEM PEAK		Aug 2 PM			Jan 1 AM

HEATING SYSTEM PSYCHROMETRICS (Airstream Temperatures at Time of Heating Peak)

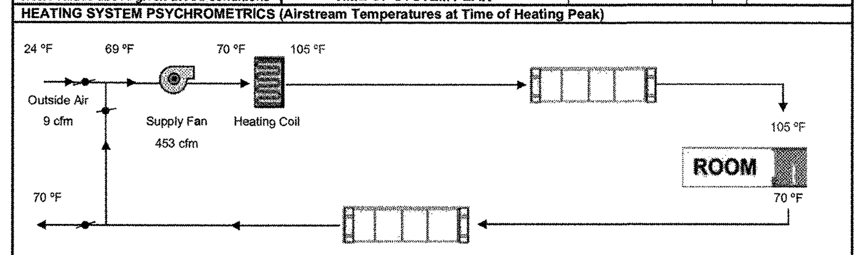

COOLING SYSTEM PSYCHROMETRICS (Airstream Temperatures at Time of Cooling Peak)

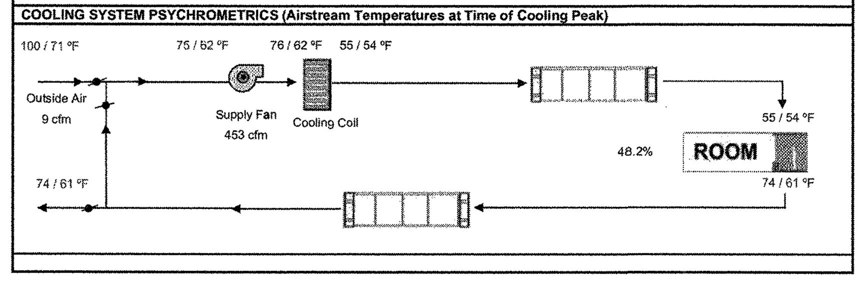

HVAC SYSTEM HEATING AND COOLING LOADS SUMMARY

Project Name: Madera Industrial WHSE | Date: 11/18/2021
System Name: Building B Suite #16 | Floor Area: 159

ENGINEERING CHECKS	
Number of Systems	1
Heating System	
Output per System	12,000
Total Output (Btuh)	12,000
Output (Btuh/sqft)	75.6
Cooling System	
Output per System	9,000
Total Output (Btuh)	9,000
Total Output (Tons)	0.8
Total Output (Btuh/sqft)	56.7
Total Output (sqft/Ton)	211.7
Air System	
CFM per System	453
Airflow (cfm)	453
Airflow (cfm/sqft)	2.85
Airflow (cfm/Ton)	604.0
Outside Air (%)	2.0%
Outside Air (cfm/sqft)	0.06
Note: values above given at ARI conditions	

SYSTEM LOAD	COIL COOLING PEAK			COIL HTG. PEAK	
	CFM	Sensible	Latent	CFM	Sensible
Total Room Loads	113	2,277	336	35	1,319
Return Vented Lighting		0			
Return Air Ducts		114			66
Return Fan		0			0
Ventilation	9	250	65	9	449
Supply Fan		478			-478
Supply Air Ducts		114			66
TOTAL SYSTEM LOAD		3,233	401		1,423
HVAC EQUIPMENT SELECTION					
Fujitsu AOUG09LMAS1/ ASUG09LMAS		8,086	0		12,000
Total Adjusted System Output (Adjusted for Peak Design conditions)		8,086	0		12,000
TIME OF SYSTEM PEAK		Jul 2 PM			Jan 1 AM

HEATING SYSTEM PSYCHROMETRICS (Airstream Temperatures at Time of Heating Peak)

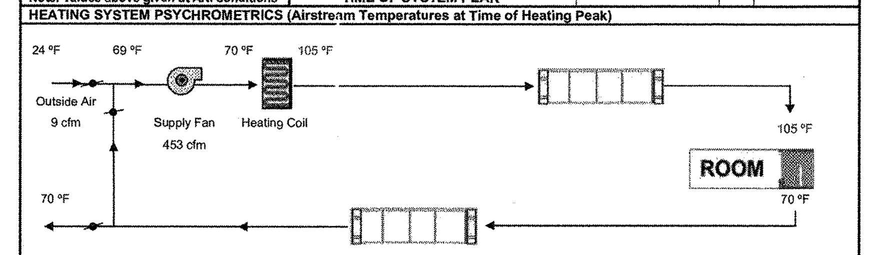

COOLING SYSTEM PSYCHROMETRICS (Airstream Temperatures at Time of Cooling Peak)

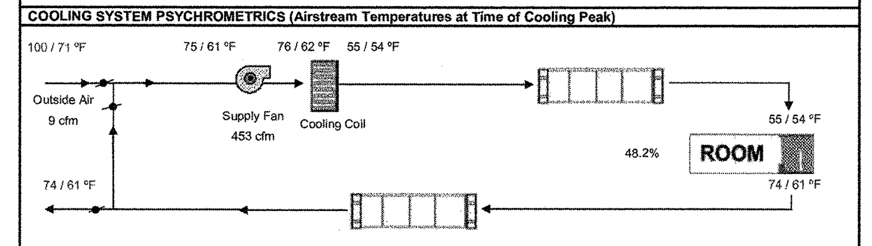

HVAC SYSTEM HEATING AND COOLING LOADS SUMMARY

Project Name: Madera Industrial WHSE | Date: 11/18/2021
System Name: Building B Suite #17 | Floor Area: 159

ENGINEERING CHECKS	
Number of Systems	1
Heating System	
Output per System	12,000
Total Output (Btuh)	12,000
Output (Btuh/sqft)	75.6
Cooling System	
Output per System	9,000
Total Output (Btuh)	9,000
Total Output (Tons)	0.8
Total Output (Btuh/sqft)	56.7
Total Output (sqft/Ton)	211.7
Air System	
CFM per System	453
Airflow (cfm)	453
Airflow (cfm/sqft)	2.85
Airflow (cfm/Ton)	604.0
Outside Air (%)	2.0%
Outside Air (cfm/sqft)	0.06
Note: values above given at ARI conditions	

SYSTEM LOAD	COIL COOLING PEAK			COIL HTG. PEAK	
	CFM	Sensible	Latent	CFM	Sensible
Total Room Loads	113	2,277	338	35	1,319
Return Vented Lighting		0			
Return Air Ducts		114			66
Return Fan		0			0
Ventilation	9	250	65	9	449
Supply Fan		478			-478
Supply Air Ducts		114			66
TOTAL SYSTEM LOAD		3,233	401		1,423
HVAC EQUIPMENT SELECTION					
Fujitsu AOUG09LMAS1/ ASUG09LMAS		8,086	0		12,000
Total Adjusted System Output (Adjusted for Peak Design conditions)		8,086	0		12,000
TIME OF SYSTEM PEAK		Jul 2 PM			Jan 1 AM

HEATING SYSTEM PSYCHROMETRICS (Airstream Temperatures at Time of Heating Peak)

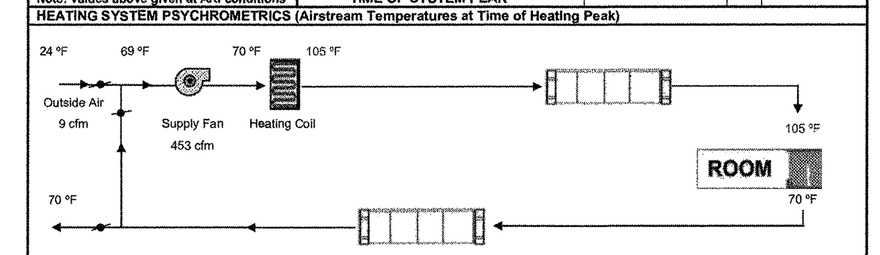

COOLING SYSTEM PSYCHROMETRICS (Airstream Temperatures at Time of Cooling Peak)

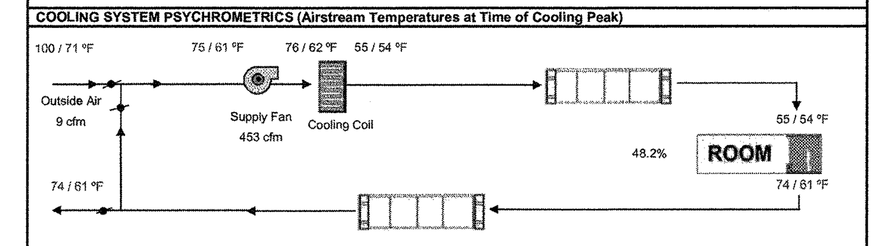

HVAC SYSTEM HEATING AND COOLING LOADS SUMMARY

Project Name: Madera Industrial WHSE | Date: 11/18/2021
System Name: Building B Suite #18 | Floor Area: 159

ENGINEERING CHECKS	
Number of Systems	1
Heating System	
Output per System	12,000
Total Output (Btuh)	12,000
Output (Btuh/sqft)	75.6
Cooling System	
Output per System	9,000
Total Output (Btuh)	9,000
Total Output (Tons)	0.8
Total Output (Btuh/sqft)	56.7
Total Output (sqft/Ton)	211.7
Air System	
CFM per System	453
Airflow (cfm)	453
Airflow (cfm/sqft)	2.85
Airflow (cfm/Ton)	604.0
Outside Air (%)	2.0%
Outside Air (cfm/sqft)	0.06
Note: values above given at ARI conditions	

SYSTEM LOAD	COIL COOLING PEAK			COIL HTG. PEAK	
	CFM	Sensible	Latent	CFM	Sensible
Total Room Loads	113	2,277	336	35	1,319
Return Vented Lighting		0			
Return Air Ducts		114			66
Return Fan		0			0
Ventilation	9	250	65	9	449
Supply Fan		478			-478
Supply Air Ducts		114			66
TOTAL SYSTEM LOAD		3,233	401		1,423
HVAC EQUIPMENT SELECTION					
Fujitsu AOUG09LMAS1/ ASUG09LMAS		8,086	0		12,000
Total Adjusted System Output (Adjusted for Peak Design conditions)		8,086	0		12,000
TIME OF SYSTEM PEAK		Jul 2 PM			Jan 1 AM

HEATING SYSTEM PSYCHROMETRICS (Airstream Temperatures at Time of Heating Peak)

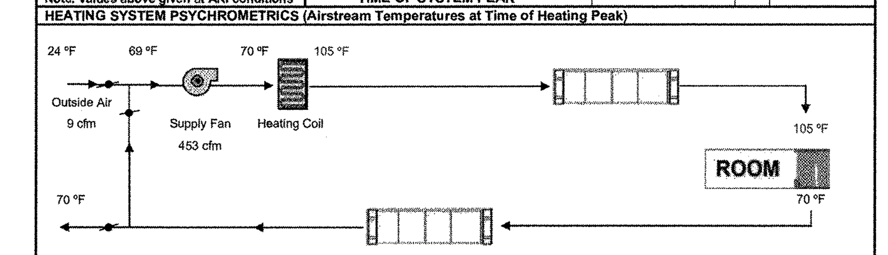

COOLING SYSTEM PSYCHROMETRICS (Airstream Temperatures at Time of Cooling Peak)

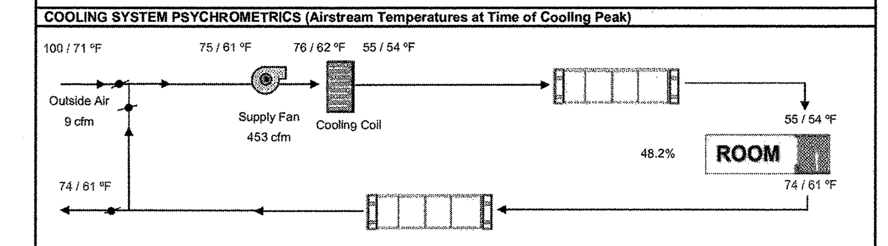

2019CBC
City of Madera
Building Department
The approval of these plans does not prevent the City of Madera from requiring correction of errors or omissions in the plans, specifications or construction. Subject to field inspections and approvals. Laws, Codes and Ordinances.
APPROVED
By:
Date: MAR 03 2022
2019CBC

These plans or drawings or any part of these publications are the exclusive propery of VAR, and may not be reproduced, or transmitted in any form or by means, recording, electronic, mechanical, photocoping or otherwise without written permission by VAR. Copies of these drawings are supplied to the owner or the Building contractor and, otherwise for the use of this project only. Any Re-use of these drawings or documents is prohibited without the written permission of VAR. If VAR is not awarded the project, VAR will not warranty these plans, drawings or contents and will not assume any liability or responsibility for the unauthorized use of these plans or drawings, and the plans or drawings and contents must be returned to VAR immediately.

VAR
Since 1970
825 S Topeka Ave
Fresno CA, 93721
559-237-3188

Valley Air Conditioning & Repair, Inc.
VAR
Since 1970

50 Years of Indoor comfort.

Air Conditioning & Heating
Custom Sheet Metal
Sales & Service

Signed *Steve Mendrin* Date 11-18-21
Steve Mendrin
License #669606
Valley Air Conditioning & Repair.

BY	REVISION	DATE

SEAL

ANY INFORMATION OR DATA ON THIS DRAWING IS NOT INTENDED TO BE SUITABLE FOR REUSE BY ANY PERSON, FIRM, CORPORATION, OR ANY OTHERS ON EXTENSIONS OF THIS PROJECT OR FOR ANY USE ON ANY OTHER PROJECT. ANY REUSE WITHOUT WRITTEN VERIFICATION AND ADAPTATION BY THE ENGINEER FOR THE SPECIFIC PURPOSE INTENDED WILL BE AT THE USER'S SOLE RISK AND WITHOUT LIABILITY OR LEGAL EXPOSURE TO THE ENGINEER.

TYPICAL MECHANICAL FLOOR PLAN

LEASE FLEX. / WAREHOUSE BUILDINGS
FOR
MADERA INDUSTRIAL WHSE, LLC
S. SCHNOOR AVENUE, MADERA, CA

JOB NUMBER 21107
DESIGNED BY
DRAWN BY
DATE 9/09/2021
SHEET NUMBER M8

HVAC SYSTEM HEATING AND COOLING LOADS SUMMARY

Project Name: Madera Industrial WHSE | Date: 11/18/2021
System Name: Building B Suite #19 | Floor Area: 159

ENGINEERING CHECKS	
Number of Systems	1
Heating System	
Output per System	12,000
Total Output (Btuh)	12,000
Output (Btuh/sqft)	75.6
Cooling System	
Output per System	9,000
Total Output (Btuh)	9,000
Total Output (Tone)	0.8
Total Output (Btuh/sqft)	56.7
Total Output (sqft/Ton)	211.7
Air System	
CFM per System	453
Airflow (cfm)	453
Airflow (cfm/sqft)	2.85
Airflow (cfm/Ton)	804.0
Outside Air (%)	2.0%
Outside Air (cfm/sqft)	0.06
Note: values above given at ARI conditions	

SYSTEM LOAD	COIL COOLING PEAK CFM	COIL COOLING PEAK Sensible	COIL COOLING PEAK Latent	COIL HTG. PEAK CFM	COIL HTG. PEAK Sensible
Total Room Loads	113	2,277	336	35	1,319
Return Vented Lighting		0			
Return Air Ducts		114			66
Return Fan		0			0
Ventilation	9	250	65	9	449
Supply Fan		478			-478
Supply Air Ducts		114			66
TOTAL SYSTEM LOAD		3,233	401		1,423
HVAC EQUIPMENT SELECTION					
Fujitsu AOUG09LMAS1/ ASUG09LMAS		8,086	0		12,000
Total Adjusted System Output (Adjusted for Peak Design conditions)		8,086	0		12,000
TIME OF SYSTEM PEAK		Jul 2 PM			Jan 1 AM

HEATING SYSTEM PSYCHROMETRICS (Airstream Temperatures at Time of Heating Peak)

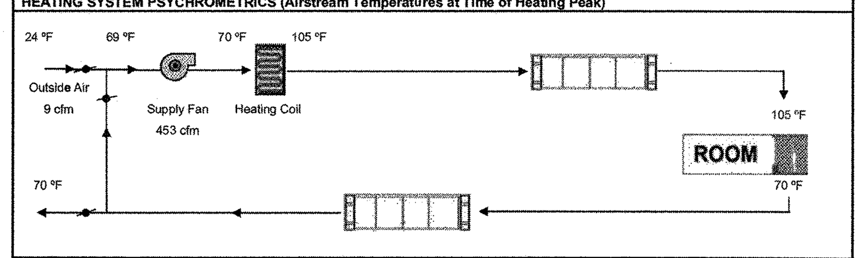

COOLING SYSTEM PSYCHROMETRICS (Airstream Temperatures at Time of Cooling Peak)

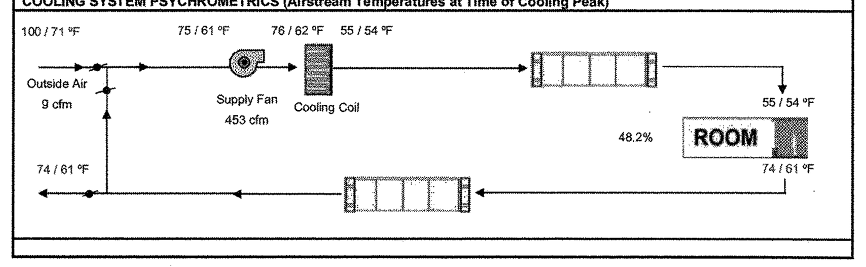

HVAC SYSTEM HEATING AND COOLING LOADS SUMMARY

Project Name: Madera Industrial WHSE | Date: 11/18/2021
System Name: Building C Suite #1 | Floor Area: 159

ENGINEERING CHECKS	
Number of Systems	1
Heating System	
Output per System	12,000
Total Output (Btuh)	12,000
Output (Btuh/sqft)	75.6
Cooling System	
Output per System	9,000
Total Output (Btuh)	9,000
Total Output (Tons)	0.8
Total Output (Btuh/sqft)	56.7
Total Output (sqft/Ton)	211.7
Air System	
CFM per System	453
Airflow (cfm)	453
Airflow (cfm/sqft)	2.85
Airflow (cfm/Ton)	604.0
Outside Air (%)	2.0%
Outside Air (cfm/sqft)	0.06
Note: values above given at ARI conditions	

SYSTEM LOAD	COIL COOLING PEAK CFM	COIL COOLING PEAK Sensible	COIL COOLING PEAK Latent	COIL HTG. PEAK CFM	COIL HTG. PEAK Sensible
Total Room Loads	146	2,915	336	45	1,660
Return Vented Lighting		0			
Return Air Ducts		146			83
Return Fan		0			0
Ventilation	9	250	65	9	449
Supply Fan		478			-478
Supply Air Ducts		146			83
TOTAL SYSTEM LOAD		3,934	401		1,798
HVAC EQUIPMENT SELECTION					
Fujitsu AOUG09LMAS1/ ASUG09LMAS		8,089	0		12,000
Total Adjusted System Output (Adjusted for Peak Design conditions)		8,089	0		12,000
TIME OF SYSTEM PEAK		Aug 2 PM			Jan 1 AM

HEATING SYSTEM PSYCHROMETRICS (Airstream Temperatures at Time of Heating Peak)

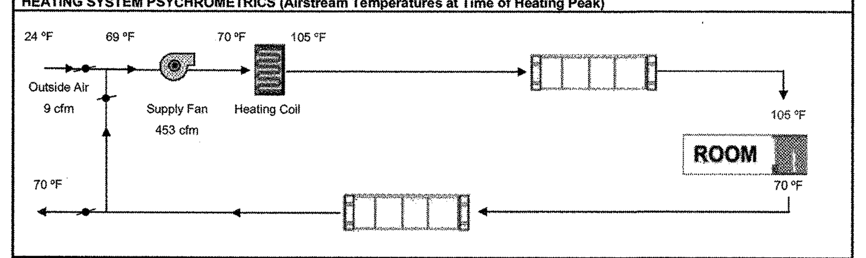

COOLING SYSTEM PSYCHROMETRICS (Airstream Temperatures at Time of Cooling Peak)

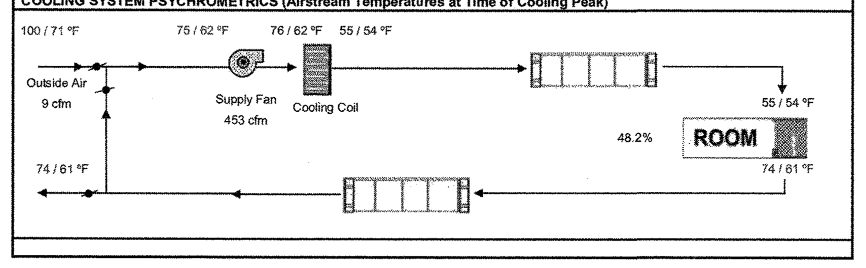

HVAC SYSTEM HEATING AND COOLING LOADS SUMMARY

Project Name: Madera Industrial WHSE | Date: 11/18/2021
System Name: Building C Suite #2 | Floor Area: 159

ENGINEERING CHECKS	
Number of Systems	1
Heating System	
Output per System	12,000
Total Output (Btuh)	12,000
Output (Btuh/sqft)	75.6
Cooling System	
Output per System	9,000
Total Output (Btuh)	9,000
Total Output (Tons)	0.8
Total Output (Btuh/sqft)	56.7
Total Output (sqft/Ton)	211.7
Air System	
CFM per System	453
Airflow (cfm)	453
Airflow (cfm/sqft)	2.85
Airflow (cfm/Ton)	604.0
Outside Air (%)	2.0%
Outside Air (cfm/sqft)	0.06
Note: values above given at ARI conditions	

SYSTEM LOAD	COIL COOLING PEAK CFM	COIL COOLING PEAK Sensible	COIL COOLING PEAK Latent	COIL HTG. PEAK CFM	COIL HTG. PEAK Sensible
Total Room Loads	128	2,557	336	35	1,319
Return Vented Lighting		0			
Return Air Ducts		128			66
Return Fan		0			0
Ventilation	9	250	65	9	449
Supply Fan		478			-478
Supply Air Ducts		128			66
TOTAL SYSTEM LOAD		3,541	401		1,423
HVAC EQUIPMENT SELECTION					
Fujitsu AOUG09LMAS1/ ASUG09LMAS		8,087	0		12,000
Total Adjusted System Output (Adjusted for Peak Design conditions)		8,087	0		12,000
TIME OF SYSTEM PEAK		Aug 2 PM			Jan 1 AM

HEATING SYSTEM PSYCHROMETRICS (Airstream Temperatures at Time of Heating Peak)

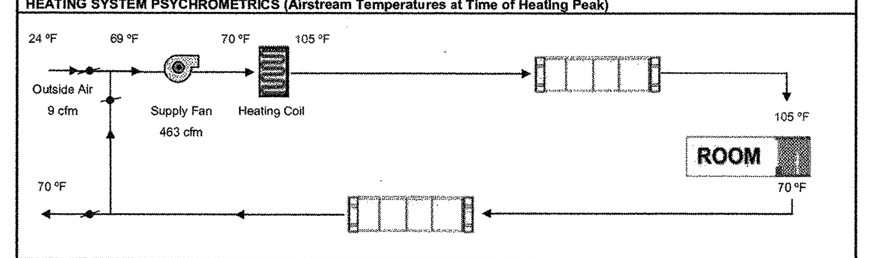

COOLING SYSTEM PSYCHROMETRICS (Airstream Temperatures at Time of Cooling Peak)

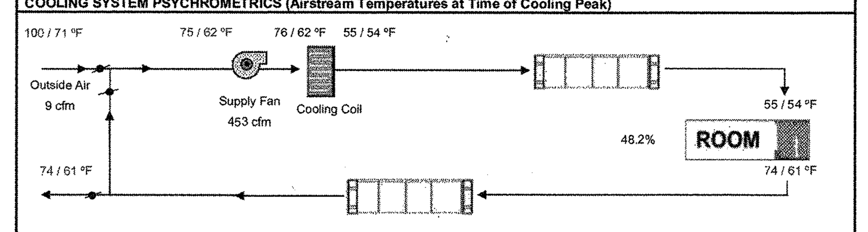

HVAC SYSTEM HEATING AND COOLING LOADS SUMMARY

Project Name: Madera Industrial WHSE | Date: 11/18/2021
System Name: Building C Suite #3 | Floor Area: 159

ENGINEERING CHECKS	
Number of Systems	1
Heating System	
Output per System	12,000
Total Output (Btuh)	12,000
Output (Btuh/sqft)	75.8
Cooling System	
Output per System	9,000
Total Output (Btuh)	9,000
Total Output (Tons)	0.8
Total Output (Btuh/sqft)	56.7
Total Output (sqft/Ton)	211.7
Air System	
CFM per System	453
Airflow (cfm)	453
Airflow (cfm/sqft)	2.85
Airflow (cfm/Ton)	604.0
Outside Air (%)	2.0%
Outside Air (cfm/sqft)	0.06
Note: values above given at ARI conditions	

SYSTEM LOAD	COIL COOLING PEAK CFM	COIL COOLING PEAK Sensible	COIL COOLING PEAK Latent	COIL HTG. PEAK CFM	COIL HTG. PEAK Sensible
Total Room Loads	128	2,557	336	35	1,319
Return Vented Lighting		0			
Return Air Ducts		128			66
Return Fan		0			0
Ventilation	9	250	65	9	449
Supply Fan		478			-478
Supply Air Ducts		128			66
TOTAL SYSTEM LOAD		3,541	401		1,423
HVAC EQUIPMENT SELECTION					
Fujitsu AOUG09LMAS1/ ASUG09LMAS		8,087	0		12,000
Total Adjusted System Output (Adjusted for Peak Design conditions)		8,087	0		12,000
TIME OF SYSTEM PEAK		Aug 2 PM			Jan 1 AM

HEATING SYSTEM PSYCHROMETRICS (Airstream Temperatures at Time of Heating Peak)

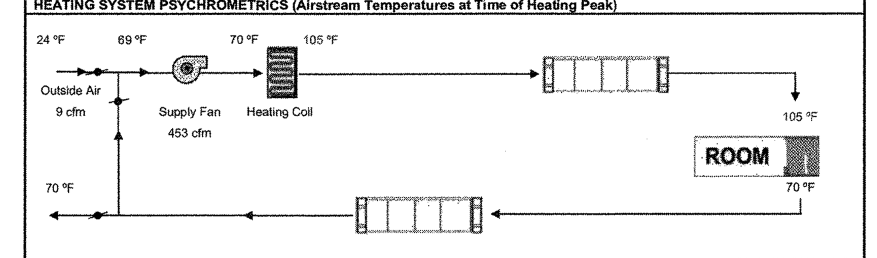

COOLING SYSTEM PSYCHROMETRICS (Airstream Temperatures at Time of Cooling Peak)

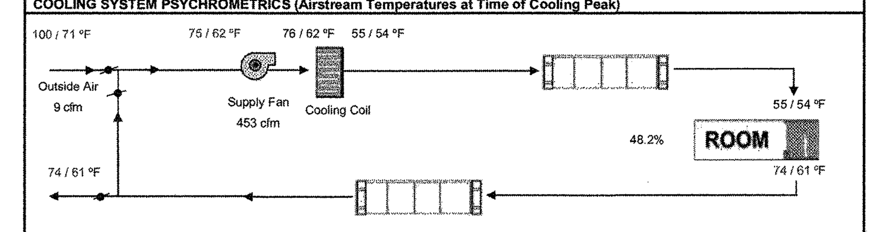

HVAC SYSTEM HEATING AND COOLING LOADS SUMMARY

Project Name: Madera Industrial WHSE | Date: 11/18/2021
System Name: Building C Suite #4 | Floor Area: 159

ENGINEERING CHECKS	
Number of Systems	1
Heating System	
Output per System	12,000
Total Output (Btuh)	12,000
Output (Btuh/sqft)	75.6
Cooling System	
Output per System	9,000
Total Output (Btuh)	9,000
Total Output (Tons)	0.8
Total Output (Btuh/sqft)	56.7
Total Output (sqft/Ton)	211.7
Air System	
CFM per System	453
Airflow (cfm)	453
Airflow (cfm/sqft)	2.85
Airflow (cfm/Ton)	804.0
Outside Air (%)	2.0%
Outside Air (cfm/sqft)	0.06
Note: values above given at ARI conditions	

SYSTEM LOAD	COIL COOLING PEAK CFM	COIL COOLING PEAK Sensible	COIL COOLING PEAK Latent	COIL HTG. PEAK CFM	COIL HTG. PEAK Sensible
Total Room Loads	128	2,557	336	35	1,319
Return Vented Lighting		0			
Return Air Ducts		128			66
Return Fan		0			0
Ventilation	9	250	65	9	449
Supply Fan		478			-478
Supply Air Ducts		128			68
TOTAL SYSTEM LOAD		3,541	401		1,423
HVAC EQUIPMENT SELECTION					
Fujitsu AOUG09LMAS1/ ASUG09LMAS		8,087	0		12,000
Total Adjusted System Output (Adjusted for Peak Design conditions)		8,087	0		12,000
TIME OF SYSTEM PEAK		Aug 2 PM			Jan 1 AM

HEATING SYSTEM PSYCHROMETRICS (Airstream Temperatures at Time of Heating Peak)

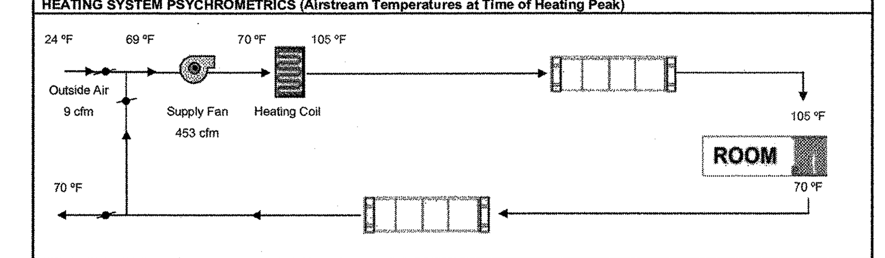

COOLING SYSTEM PSYCHROMETRICS (Airstream Temperatures at Time of Cooling Peak)

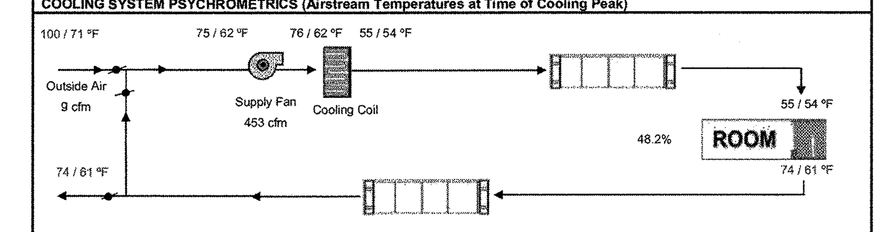

HVAC SYSTEM HEATING AND COOLING LOADS SUMMARY

Project Name: Madera Industrial WHSE | Date: 11/18/2021
System Name: Building C Suite #5 | Floor Area: 159

ENGINEERING CHECKS	
Number of Systems	1
Heating System	
Output per System	12,000
Total Output (Btuh)	12,000
Output (Btuh/sqft)	75.6
Cooling System	
Output per System	9,000
Total Output (Btuh)	9,000
Total Output (Tons)	0.8
Total Output (Btuh/sqft)	58.7
Total Output (sqft/Ton)	211.7
Air System	
CFM per System	453
Airflow (cfm)	453
Airflow (cfm/sqft)	2.85
Airflow (cfm/Ton)	604.0
Outside Air (%)	2.0%
Outside Air (cfm/sqft)	0.06
Note: values above given at ARI conditions	

SYSTEM LOAD	COIL COOLING PEAK CFM	COIL COOLING PEAK Sensible	COIL COOLING PEAK Latent	COIL HTG. PEAK CFM	COIL HTG. PEAK Sensible
Total Room Loads	128	2,557	336	35	1,319
Return Vented Lighting		0			
Return Air Ducts		128			66
Return Fan		0			0
Ventilation	9	250	65	9	449
Supply Fan		478			-478
Supply Air Ducts		128			66
TOTAL SYSTEM LOAD		3,541	401		1,423
HVAC EQUIPMENT SELECTION					
Fujitsu AOUG09LMAS1/ ASUG09LMAS		8,087	0		12,000
Total Adjusted System Output (Adjusted for Peak Design conditions)		8,087	0		12,000
TIME OF SYSTEM PEAK		Aug 2 PM			Jan 1 AM

HEATING SYSTEM PSYCHROMETRICS (Airstream Temperatures at Time of Heating Peak)

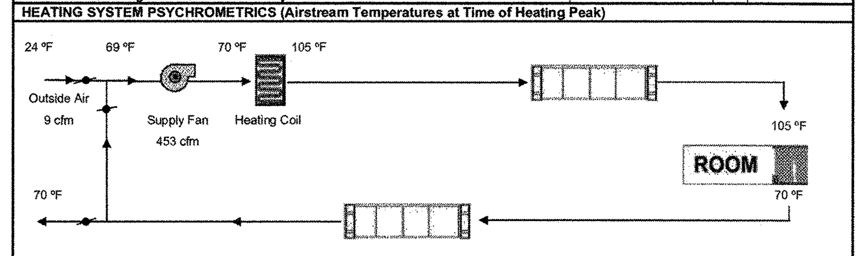

COOLING SYSTEM PSYCHROMETRICS (Airstream Temperatures at Time of Cooling Peak)

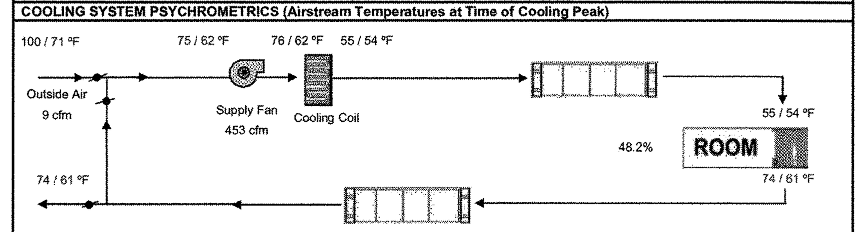

HVAC SYSTEM HEATING AND COOLING LOADS SUMMARY

Project Name: Madera Industrial WHSE | Date: 11/18/2021
System Name: Building C Suite #6 | Floor Area: 159

ENGINEERING CHECKS	
Number of Systems	1
Heating System	
Output per System	12,000
Total Output (Btuh)	12,000
Output (Btuh/sqft)	75.6
Cooling System	
Output per System	9,000
Total Output (Btuh)	9,000
Total Output (Tons)	0.8
Total Output (Btuh/sqft)	58.7
Total Output (sqft/Ton)	211.7
Air System	
CFM per System	453
Airflow (cfm)	453
Airflow (cfm/sqft)	2.85
Airflow (cfm/Ton)	604.0
Outside Air (%)	2.0%
Outside Air (cfm/sqft)	0.08
Note: values above given at ARI conditions	

SYSTEM LOAD	COIL COOLING PEAK CFM	COIL COOLING PEAK Sensible	COIL COOLING PEAK Latent	COIL HTG. PEAK CFM	COIL HTG. PEAK Sensible
Total Room Loads	128	2,557	338	35	1,319
Return Vented Lighting		0			
Return Air Ducts		128			86
Return Fan		0			0
Ventilation	9	250	65	9	449
Supply Fan		478			-478
Supply Air Ducts		128			66
TOTAL SYSTEM LOAD		3,541	401		1,423
HVAC EQUIPMENT SELECTION					
Fujitsu AOUG09LMAS1/ ASUG09LMAS		8,087	0		12,000
Total Adjusted System Output (Adjusted for Peak Design conditions)		8,087	0		12,000
TIME OF SYSTEM PEAK		Aug 2 PM			Jan 1 AM

HEATING SYSTEM PSYCHROMETRICS (Airstream Temperatures at Time of Heating Peak)

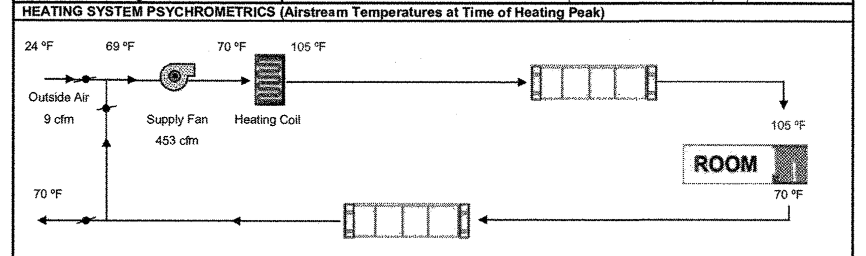

COOLING SYSTEM PSYCHROMETRICS (Airstream Temperatures at Time of Cooling Peak)

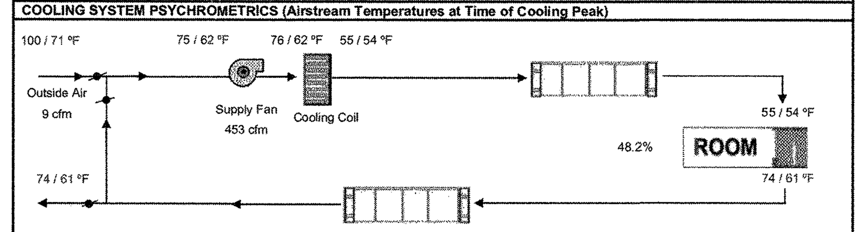

HVAC SYSTEM HEATING AND COOLING LOADS SUMMARY

Project Name: Madera Industrial WHSE | Date: 11/18/2021
System Name: Building C Suite #7 | Floor Area: 159

ENGINEERING CHECKS	
Number of Systems	1
Heating System	
Output per System	12,000
Total Output (Btuh)	12,000
Output (Btuh/sqft)	75.6
Cooling System	
Output per System	9,000
Total Output (Btuh)	9,000
Total Output (Tons)	0.8
Total Output (Btuh/sqft)	56.7
Total Output (sqft/Ton)	211.7
Air System	
CFM per System	453
Airflow (cfm)	453
Airflow (cfm/sqft)	2.85
Airflow (cfm/Ton)	604.0
Outside Air (%)	2.0%
Outside Air (cfm/sqft)	0.06
Note: values above given at ARI conditions	

SYSTEM LOAD	COIL COOLING PEAK CFM	COIL COOLING PEAK Sensible	COIL COOLING PEAK Latent	COIL HTG. PEAK CFM	COIL HTG. PEAK Sensible
Total Room Loads	128	2,557	336	35	1,319
Return Vented Lighting		0			
Return Air Ducts		128			66
Return Fan		0			0
Ventilation	9	250	65	9	449
Supply Fan		478			-478
Supply Air Ducts		128			66
TOTAL SYSTEM LOAD		3,541	401		1,423
HVAC EQUIPMENT SELECTION					
Fujitsu AOUG09LMAS1/ ASUG09LMAS		8,087	0		12,000
Total Adjusted System Output (Adjusted for Peak Design conditions)		8,087	0		12,000
TIME OF SYSTEM PEAK		Aug 2 PM			Jan 1 AM

HEATING SYSTEM PSYCHROMETRICS (Airstream Temperatures at Time of Heating Peak)

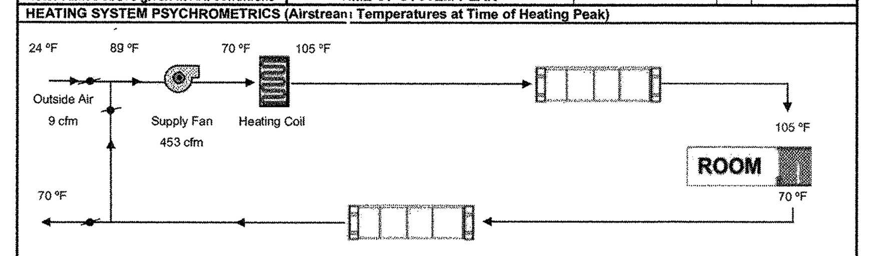

COOLING SYSTEM PSYCHROMETRICS (Airstream Temperatures at Time of Cooling Peak)

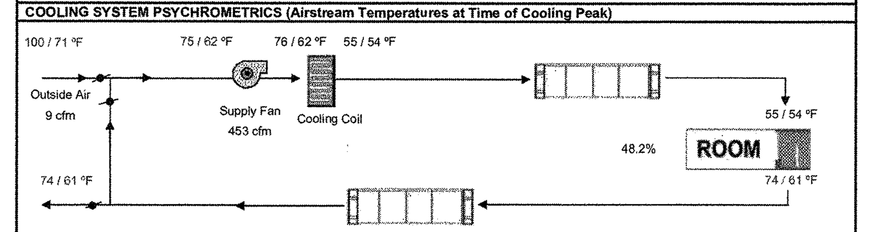

HVAC SYSTEM HEATING AND COOLING LOADS SUMMARY

Project Name: Madera Industrial WHSE | Date: 11/18/2021
System Name: Building C Suite #8 | Floor Area: 159

ENGINEERING CHECKS	
Number of Systems	1
Heating System	
Output per System	12,000
Total Output (Btuh)	12,000
Output (Btuh/sqft)	75.6
Cooling System	
Output per System	9,000
Total Output (Btuh)	9,000
Total Output (Tons)	0.8
Total Output (Btuh/sqft)	56.7
Total Output (sqft/Ton)	211.7
Air System	
CFM per System	453
Airflow (cfm)	453
Airflow (cfm/sqft)	2.85
Airflow (cfm/Ton)	604.0
Outside Air (%)	2.0%
Outside Air (cfm/sqft)	0.06
Note: values above given at ARI conditions	

SYSTEM LOAD	COIL COOLING PEAK CFM	COIL COOLING PEAK Sensible	COIL COOLING PEAK Latent	COIL HTG. PEAK CFM	COIL HTG. PEAK Sensible
Total Room Loads	128	2,557	336	35	1,319
Return Vented Lighting		0			
Return Air Ducts		128			66
Return Fan		0			0
Ventilation	9	250	65	9	449
Supply Fan		478			-478
Supply Air Ducts		128			66
TOTAL SYSTEM LOAD		3,541	401		1,423
HVAC EQUIPMENT SELECTION					
Fujitsu AOUG09LMAS1/ ASUG09LMAS		8,087	0		12,000
Total Adjusted System Output (Adjusted for Peak Design conditions)		8,087	0		12,000
TIME OF SYSTEM PEAK		Aug 2 PM			Jan 1 AM

HEATING SYSTEM PSYCHROMETRICS (Airstream Temperatures at Time of Heating Peak)

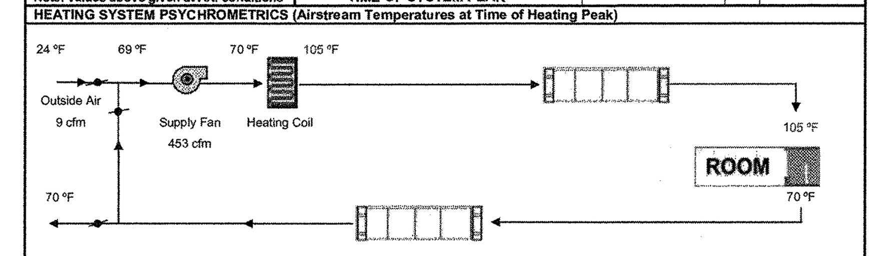

COOLING SYSTEM PSYCHROMETRICS (Airstream Temperatures at Time of Cooling Peak)

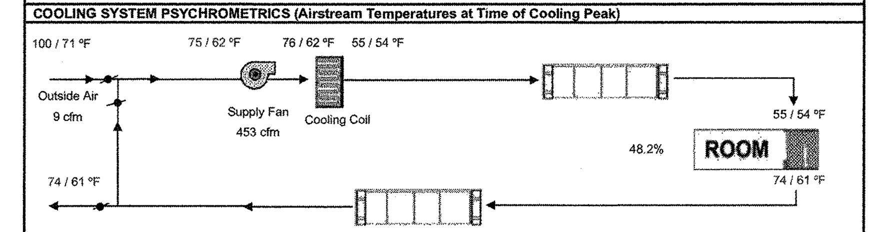

HVAC SYSTEM HEATING AND COOLING LOADS SUMMARY

Project Name: Madera Industrial WHSE | Date: 11/18/2021
System Name: Building C Suite #9 | Floor Area: 159

ENGINEERING CHECKS	
Number of Systems	1
Heating System	
Output per System	12,000
Total Output (Btuh)	12,000
Output (Btuh/sqft)	75.6
Cooling System	
Output per System	9,000
Total Output (Btuh)	9,000
Total Output (Tons)	0.8
Total Output (Btuh/sqft)	56.7
Total Output (sqft/Ton)	211.7
Air System	
CFM per System	453
Airflow (cfm)	453
Airflow (cfm/sqft)	2.85
Airflow (cfm/Ton)	604.0
Outside Air (%)	2.0%
Outside Air (cfm/sqft)	0.06
Note: values above given at ARI conditions	

SYSTEM LOAD	COIL COOLING PEAK CFM	COIL COOLING PEAK Sensible	COIL COOLING PEAK Latent	COIL HTG. PEAK CFM	COIL HTG. PEAK Sensible
Total Room Loads	128	2,557	336	35	1,319
Return Vented Lighting		0			
Return Air Ducts		128			66
Return Fan		0			0
Ventilation	9	250	65	9	449
Supply Fan		478			-478
Supply Air Ducts		128			66
TOTAL SYSTEM LOAD		3,541	401		1,423
HVAC EQUIPMENT SELECTION					
Fujitsu AOUG09LMAS1/ ASUG09LMAS		8,087	0		12,000
Total Adjusted System Output (Adjusted for Peak Design conditions)		8,087	0		12,000
TIME OF SYSTEM PEAK		Aug 2 PM			Jan 1 AM

HEATING SYSTEM PSYCHROMETRICS (Airstream Temperatures at Time of Heating Peak)

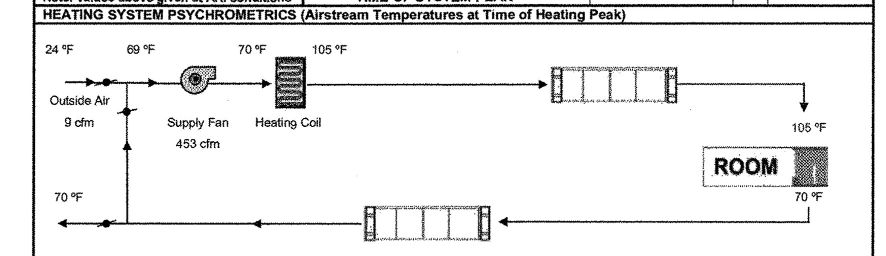

COOLING SYSTEM PSYCHROMETRICS (Airstream Temperatures at Time of Cooling Peak)

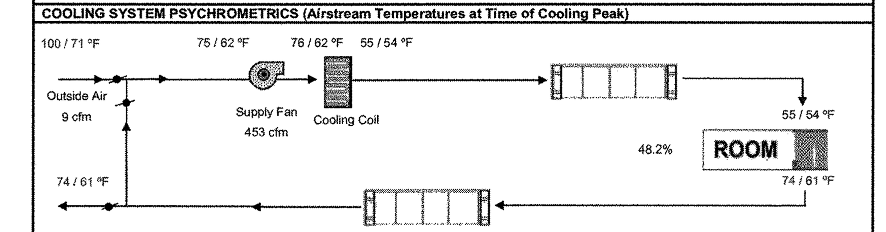

2019CBC
City of Madera
Building Department
The approval of these plans does not prevent the City of Madera from requiring correction of errors or omissions in the plans, specifications of construction. Subject to field inspections and approvals. Laws, Codes and Ordinances
APPROVED
By:
Date: MAR 0 3 2022
2019CBC
2019CBC

These plans or drawings or any part of these publications are the exclusive propery of VAR, and may not be reproduced, or transmitted in any form or by means, recording, electronic, mechanical, photocoping or otherwise without written permission by VAR. Copies of these drawings are supplied to the owner or the Building contractor and, otherwise for the use of this project only. Any Re-use of these drawings or documents is prohibited without the written permission of VAR. If VAR is not awarded the project, VAR will not warranty these plans, drawings or contents and will not assume any liability or responsibility for the unauthorized use of these plans or drawings, and the plans or drawings and contents must be returned to VAR immediately.

VAR
Since 1970
825 S Topeka Ave
Fresno CA, 93721
559-237-3188

Valley Air Conditioning & Repair, Inc. VAR Since 1970

50 Years of Indoor comfort.

Air Conditioning & Heating
Custom Sheet Metal
Sales & Service

Signed *Steve Mendrin* Date 11-18-21
Steve Mendrin
License #869606
Valley Air Conditioning & Repair.

BY	REVISION	DATE

ANY INFORMATION OR DATA ON THIS DRAWING IS NOT INTENDED TO BE SUITABLE FOR REUSE BY ANY PERSON, FIRM, CORPORATION, OR ANY OTHERS ON EXTENSIONS OF THIS PROJECT OR FOR ANY USE ON ANY OTHER PROJECT. ANY REUSE WITHOUT WRITTEN VERIFICATION AND ADAPTATION BY THE ENGINEER FOR THE SPECIFIC PURPOSE INTENDED WILL BE AT THE USER'S SOLE RISK AND WITHOUT LIABILITY OR LEGAL EXPOSURE TO THE ENGINEER.

SEAL

TYPICAL MECHANICAL FLOOR PLAN

LEASE FLEX. / WAREHOUSE BUILDINGS

FOR

MADERA INDUSTRIAL WHSE, LLC

S. SCHNOOR AVENUE, MADERA, CA

JOB NUMBER	21107
DESIGNED BY	
DRAWN BY	
DATE	9/09/2021
SHEET NUMBER	M9

HVAC SYSTEM HEATING AND COOLING LOADS SUMMARY

Project Name	Date
Madera Industrial WHSE	11/18/2021
System Name	Floor Area
Building C Suite #10	159

ENGINEERING CHECKS	
Number of Systems	1
Heating System	
Output per System	12,000
Total Output (Btuh)	12,000
Output (Btuh/sqft)	75.6
Cooling System	
Output per System	9,000
Total Output (Btuh)	9,000
Total Output (Tons)	0.8
Total Output (Btuh/sqft)	56.7
Total Output (sqft/Ton)	211.7
Air System	
CFM per System	453
Airflow (cfm)	453
Airflow (cfm/sqft)	2.85
Airflow (cfm/Ton)	604.0
Outside Air (%)	2.0%
Outside Air (cfm/sqft)	0.06

Note: values above given at ARI conditions

SYSTEM LOAD	COIL COOLING PEAK			COIL HTG. PEAK	
	CFM	Sensible	Latent	CFM	Sensible
Total Room Loads	128	2,557	336	35	1,319
Return Vented Lighting		0			
Return Air Ducts		128			68
Return Fan		0			0
Ventilation	9	250	65	9	449
Supply Fan		478			-478
Supply Air Ducts		128			66
TOTAL SYSTEM LOAD		3,541	401		1,423

HVAC EQUIPMENT SELECTION	Cooling Sensible	Cooling Latent	Heating Sensible
Fujitsu AOUG09LMAS1/ ASUG09LMAS	8,087	0	12,000
Total Adjusted System Output (Adjusted for Peak Design conditions)	8,087	0	12,000
TIME OF SYSTEM PEAK	Aug 2 PM		Jan 1 AM

HEATING SYSTEM PSYCHROMETRICS (Airstream Temperatures at Time of Heating Peak)

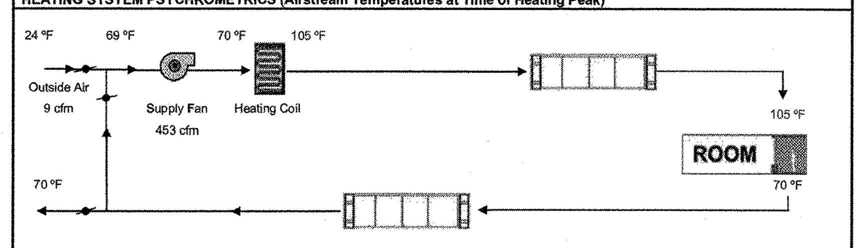

COOLING SYSTEM PSYCHROMETRICS (Airstream Temperatures at Time of Cooling Peak)

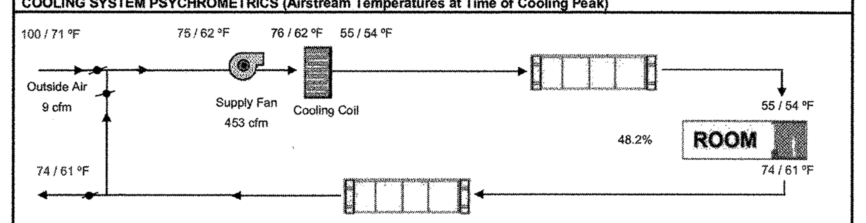

HVAC SYSTEM HEATING AND COOLING LOADS SUMMARY

Project Name	Date
Madera Industrial WHSE	11/18/2021
System Name	Floor Area
Building C Suite #11	159

ENGINEERING CHECKS	
Number of Systems	1
Heating System	
Output per System	12,000
Total Output (Btuh)	12,000
Output (Btuh/sqft)	75.6
Cooling System	
Output per System	9,000
Total Output (Btuh)	9,000
Total Output (Tons)	0.8
Total Output (Btuh/sqft)	56.7
Total Output (sqft/Ton)	211.7
Air System	
CFM per System	453
Airflow (cfm)	453
Airflow (cfm/sqft)	2.85
Airflow (cfm/Ton)	604.0
Outside Air (%)	2.0%
Outside Air (cfm/sqft)	0.06

Note: values above given at ARI conditions

SYSTEM LOAD	COIL COOLING PEAK			COIL HTG. PEAK	
	CFM	Sensible	Latent	CFM	Sensible
Total Room Loads	128	2,557	336	35	1,319
Return Vented Lighting		0			
Return Air Ducts		128			66
Return Fan		0			0
Ventilation	9	250	65	9	449
Supply Fan		478			-478
Supply Air Ducts		128			66
TOTAL SYSTEM LOAD		3,541	401		1,423

HVAC EQUIPMENT SELECTION	Cooling Sensible	Cooling Latent	Heating Sensible
Fujitsu AOUG09LMAS1/ ASUG09LMAS	8,087	0	12,000
Total Adjusted System Output (Adjusted for Peak Design conditions)	8,087	0	12,000
TIME OF SYSTEM PEAK	Aug 2 PM		Jan 1 AM

HEATING SYSTEM PSYCHROMETRICS (Airstream Temperatures at Time of Heating Peak)

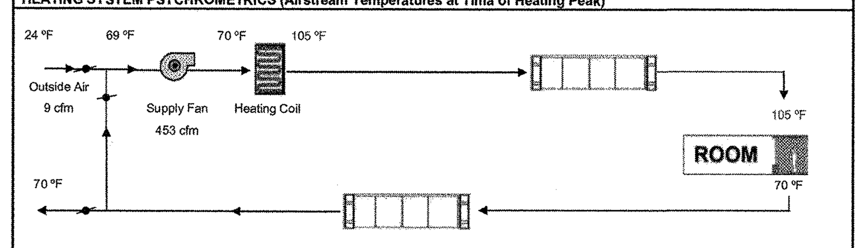

COOLING SYSTEM PSYCHROMETRICS (Airstream Temperatures at Time of Cooling Peak)

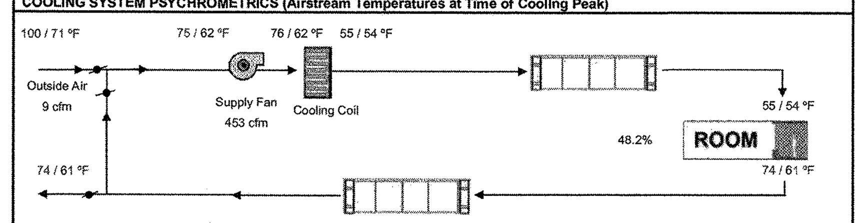

HVAC SYSTEM HEATING AND COOLING LOADS SUMMARY

Project Name	Date
Madera Industrial WHSE	11/18/2021
System Name	Floor Area
Building C Suite #12	159

ENGINEERING CHECKS	
Number of Systems	1
Heating System	
Output per System	12,000
Total Output (Btuh)	12,000
Output (Btuh/sqft)	75.6
Cooling System	
Output per System	9,000
Total Output (Btuh)	9,000
Total Output (Tons)	0.8
Total Output (Btuh/sqft)	56.7
Total Output (sqft/Ton)	211.7
Air System	
CFM per System	453
Airflow (cfm)	453
Airflow (cfm/sqft)	2.85
Airflow (cfm/Ton)	604.0
Outside Air (%)	2.0%
Outside Air (cfm/sqft)	0.06

Note: values above given at ARI conditions

SYSTEM LOAD	COIL COOLING PEAK			COIL HTG. PEAK	
	CFM	Sensible	Latent	CFM	Sensible
Total Room Loads	128	2,557	336	35	1,319
Return Vented Lighting		0			
Return Air Ducts		128			68
Return Fan		0			0
Ventilation	9	250	65	9	449
Supply Fan		478			-478
Supply Air Ducts		128			66
TOTAL SYSTEM LOAD		3,541	401		1,423

HVAC EQUIPMENT SELECTION	Cooling Sensible	Cooling Latent	Heating Sensible
Fujitsu AOUG09LMAS1/ ASUG09LMAS	8,087	0	12,000
Total Adjusted System Output (Adjusted for Peak Design conditions)	8,087	0	12,000
TIME OF SYSTEM PEAK	Aug 2 PM		Jan 1 AM

HEATING SYSTEM PSYCHROMETRICS (Airstream Temperatures at Time of Heating Peak)

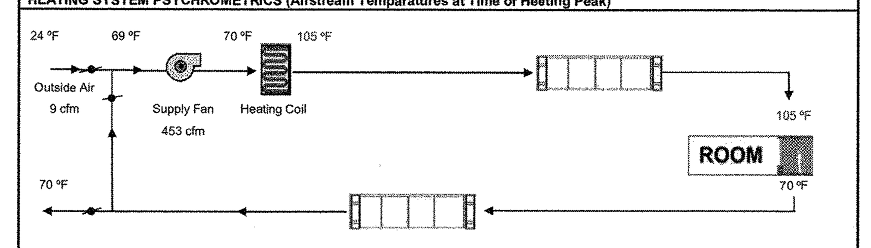

COOLING SYSTEM PSYCHROMETRICS (Airstream Temperatures at Time of Cooling Peak)

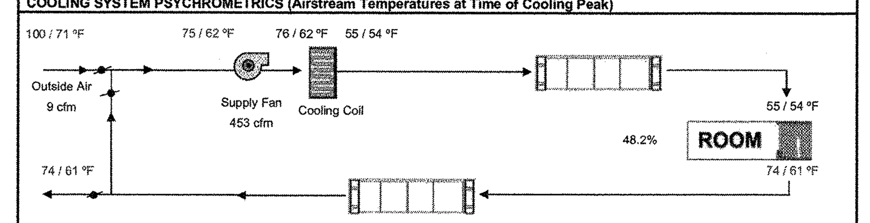

HVAC SYSTEM HEATING AND COOLING LOADS SUMMARY

Project Name	Date
Madera Industrial WHSE	11/18/2021
System Name	Floor Area
Building C Suite #13	159

ENGINEERING CHECKS	
Number of Systems	1
Heating System	
Output per System	12,000
Total Output (Btuh)	12,000
Output (Btuh/sqft)	75.6
Cooling System	
Output per System	9,000
Total Output (Btuh)	9,000
Total Output (Tons)	0.8
Total Output (Btuh/sqft)	56.7
Total Output (sqft/Ton)	211.7
Air System	
CFM per System	453
Airflow (cfm)	453
Airflow (cfm/sqft)	2.85
Airflow (cfm/Ton)	604.0
Outside Air (%)	2.0%
Outside Air (cfm/sqft)	0.06

Note: values above given at ARI conditions

SYSTEM LOAD	COIL COOLING PEAK			COIL HTG. PEAK	
	CFM	Sensible	Latent	CFM	Sensible
Total Room Loads	128	2,557	336	35	1,319
Return Vented Lighting		0			
Return Air Ducts		128			66
Return Fan		0			0
Ventilation	9	250	65	9	449
Supply Fan		478			-478
Supply Air Ducts		128			66
TOTAL SYSTEM LOAD		3,541	401		1,423

HVAC EQUIPMENT SELECTION	Cooling Sensible	Cooling Latent	Heating Sensible
Fujitsu AOUG09LMAS1/ ASUG09LMAS	8,087	0	12,000
Total Adjusted System Output (Adjusted for Peak Design conditions)	8,087	0	12,000
TIME OF SYSTEM PEAK	Aug 2 PM		Jan 1 AM

HEATING SYSTEM PSYCHROMETRICS (Airstream Temperatures at Time of Heating Peak)

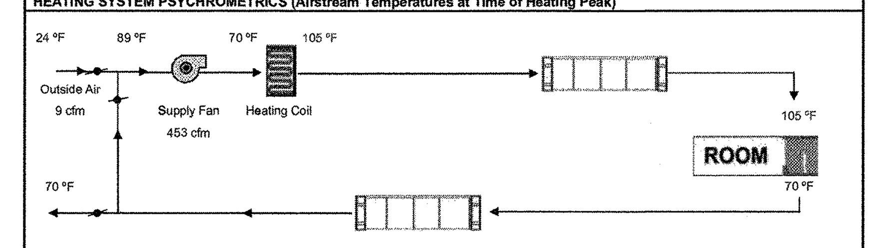

COOLING SYSTEM PSYCHROMETRICS (Airstream Temperatures at Time of Cooling Peak)

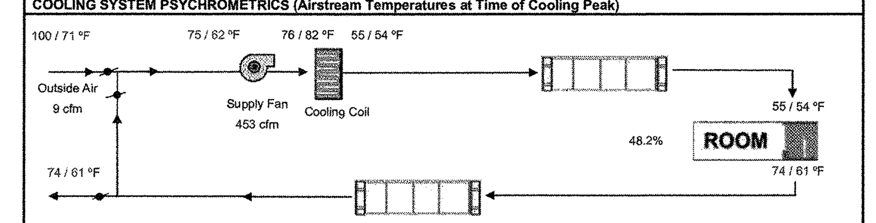

HVAC SYSTEM HEATING AND COOLING LOADS SUMMARY

Project Name	Date
Madera Industrial WHSE	11/18/2021
System Name	Floor Area
Building C Suite #14	159

ENGINEERING CHECKS	
Number of Systems	1
Heating System	
Output per System	12,000
Total Output (Btuh)	12,000
Output (Btuh/sqft)	75.6
Cooling System	
Output per System	9,000
Total Output (Btuh)	9,000
Total Output (Tons)	0.8
Total Output (Btuh/sqft)	56.7
Total Output (sqft/Ton)	211.7
Air System	
CFM per System	453
Airflow (cfm)	453
Airflow (cfm/sqft)	2.85
Airflow (cfm/Ton)	604.0
Outside Air (%)	2.0%
Outside Air (cfm/sqft)	0.06

Note: values above given at ARI conditions

SYSTEM LOAD	COIL COOLING PEAK			COIL HTG. PEAK	
	CFM	Sensible	Latent	CFM	Sensible
Total Room Loads	128	2,557	336	35	1,319
Return Vented Lighting		0			
Return Air Ducts		128			66
Return Fan		0			0
Ventilation	9	250	65	9	449
Supply Fan		478			-478
Supply Air Ducts		128			86
TOTAL SYSTEM LOAD		3,541	401		1,423

HVAC EQUIPMENT SELECTION	Cooling Sensible	Cooling Latent	Heating Sensible
Fujitsu AOUG09LMAS1/ ASUG09LMAS	8,087	0	12,000
Total Adjusted System Output (Adjusted for Peak Design conditions)	8,087	0	12,000
TIME OF SYSTEM PEAK	Aug 2 PM		Jan 1 AM

HEATING SYSTEM PSYCHROMETRICS (Airstream Temperatures at Time of Heating Peak)

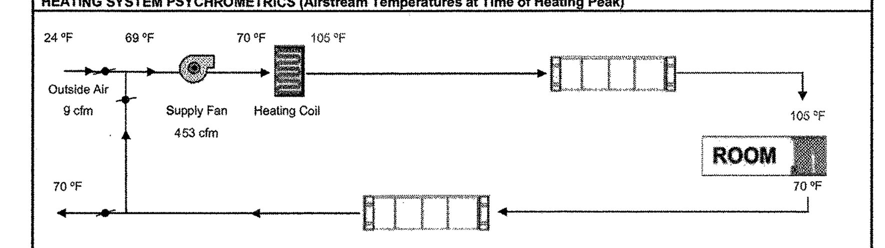

COOLING SYSTEM PSYCHROMETRICS (Airstream Temperatures at Time of Cooling Peak)

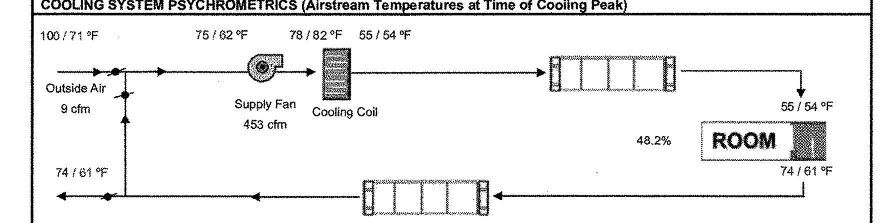

HVAC SYSTEM HEATING AND COOLING LOADS SUMMARY

Project Name	Date
Madera Industrial WHSE	11/18/2021
System Name	Floor Area
Building C Suite #15	159

ENGINEERING CHECKS	
Number of Systems	1
Heating System	
Output per System	12,000
Total Output (Btuh)	12,000
Output (Btuh/sqft)	75.6
Cooling System	
Output per System	9,000
Total Output (Btuh)	9,000
Total Output (Tons)	0.8
Total Output (Btuh/sqft)	58.7
Total Output (sqft/Ton)	211.7
Air System	
CFM per System	453
Airflow (cfm)	453
Airflow (cfm/sqft)	2.85
Airflow (cfm/Ton)	604.0
Outside Air (%)	2.0%
Outside Air (cfm/sqft)	0.06

Note: values above given at ARI conditions

SYSTEM LOAD	COIL COOLING PEAK			COIL HTG. PEAK	
	CFM	Sensible	Latent	CFM	Sensible
Total Room Loads	128	2,557	336	35	1,319
Return Vented Lighting		0			
Return Air Ducts		128			66
Return Fan		0			0
Ventilation	9	250	65	9	449
Supply Fan		478			-478
Supply Air Ducts		128			66
TOTAL SYSTEM LOAD		3,541	401		1,423

HVAC EQUIPMENT SELECTION	Cooling Sensible	Cooling Latent	Heating Sensible
Fujitsu AOUG09LMAS1/ ASUG09LMAS	8,087	0	12,000
Total Adjusted System Output (Adjusted for Peak Design conditions)	8,087	0	12,000
TIME OF SYSTEM PEAK	Aug 2 PM		Jan 1 AM

HEATING SYSTEM PSYCHROMETRICS (Airstream Temperatures at Time of Heating Peak)

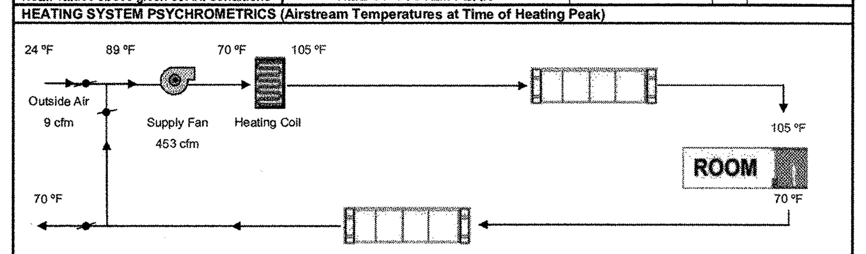

COOLING SYSTEM PSYCHROMETRICS (Airstream Temperatures at Time of Cooling Peak)

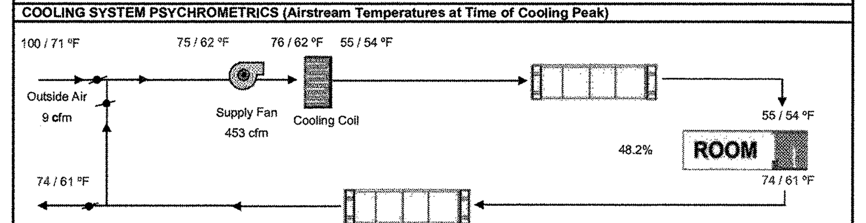

HVAC SYSTEM HEATING AND COOLING LOADS SUMMARY

Project Name	Date
Madera Industrial WHSE	11/18/2021
System Name	Floor Area
Building C Suite #16	159

ENGINEERING CHECKS	
Number of Systems	1
Heating System	
Output per System	12,000
Total Output (Btuh)	12,000
Output (Btuh/sqft)	75.6
Cooling System	
Output per System	9,000
Total Output (Btuh)	9,000
Total Output (Tons)	0.8
Total Output (Btuh/sqft)	56.7
Total Output (sqft/Ton)	211.7
Air System	
CFM per System	453
Airflow (cfm)	453
Airflow (cfm/sqft)	2.85
Airflow (cfm/Ton)	604.0
Outside Air (%)	2.0%
Outside Air (cfm/sqft)	0.06

Note: values above given at ARI conditions

SYSTEM LOAD	COIL COOLING PEAK			COIL HTG. PEAK	
	CFM	Sensible	Latent	CFM	Sensible
Total Room Loads	128	2,557	336	35	1,319
Return Vented Lighting		0			
Return Air Ducts		128			66
Return Fan		0			0
Ventilation	9	250	85	9	449
Supply Fan		478			-478
Supply Air Ducts		128			66
TOTAL SYSTEM LOAD		3,541	401		1,423

HVAC EQUIPMENT SELECTION	Cooling Sensible	Cooling Latent	Heating Sensible
Fujitsu AOUG09LMAS1/ ASUG09LMAS	8,087	0	12,000
Total Adjusted System Output (Adjusted for Peak Design conditions)	8,087	0	12,000
TIME OF SYSTEM PEAK	Aug 2 PM		Jan 1 AM

HEATING SYSTEM PSYCHROMETRICS (Airstream Temperatures at Time of Heating Peak)

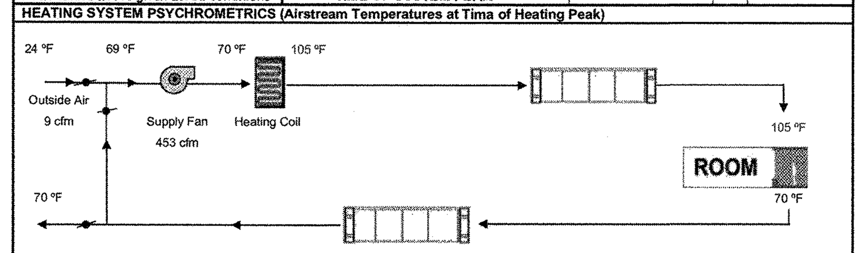

COOLING SYSTEM PSYCHROMETRICS (Airstream Temperatures at Time of Cooling Peak)

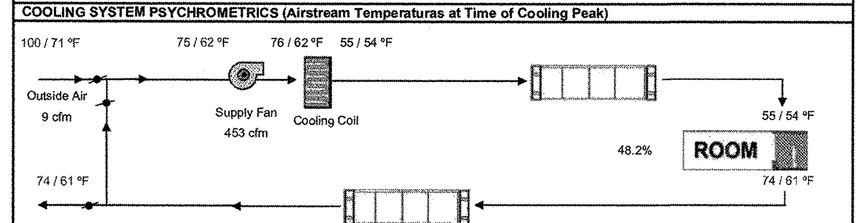

HVAC SYSTEM HEATING AND COOLING LOADS SUMMARY

Project Name	Date
Madera Industrial WHSE	11/18/2021
System Name	Floor Area
Building C Suite #17	159

ENGINEERING CHECKS	
Number of Systems	1
Heating System	
Output per System	12,000
Total Output (Btuh)	12,000
Output (Btuh/sqft)	75.6
Cooling System	
Output per System	9,000
Total Output (Btuh)	9,000
Total Output (Tons)	0.8
Total Output (Btuh/sqft)	56.7
Total Output (sqft/Ton)	211.7
Air System	
CFM per System	453
Airflow (cfm)	453
Airflow (cfm/sqft)	2.85
Airflow (cfm/Ton)	604.0
Outside Air (%)	2.0%
Outside Air (cfm/sqft)	0.06

Note: values above given at ARI conditions

SYSTEM LOAD	COIL COOLING PEAK			COIL HTG. PEAK	
	CFM	Sensible	Latent	CFM	Sensible
Total Room Loads	128	2,557	336	35	1,319
Return Vented Lighting		0			
Return Air Ducts		128			66
Return Fan		0			0
Ventilation	9	250	65	9	449
Supply Fan		478			-478
Supply Air Ducts		128			66
TOTAL SYSTEM LOAD		3,541	401		1,423

HVAC EQUIPMENT SELECTION	Cooling Sensible	Cooling Latent	Heating Sensible
Fujitsu AOUG09LMAS1/ ASUG09LMAS	8,087	0	12,000
Total Adjusted System Output (Adjusted for Peak Design conditions)	8,087	0	12,000
TIME OF SYSTEM PEAK	Aug 2 PM		Jan 1 AM

HEATING SYSTEM PSYCHROMETRICS (Airstream Temperatures at Time of Heating Peak)

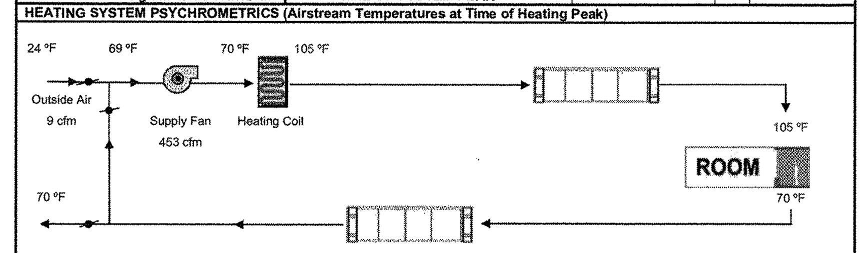

COOLING SYSTEM PSYCHROMETRICS (Airstream Temperatures at Time of Cooling Peak)

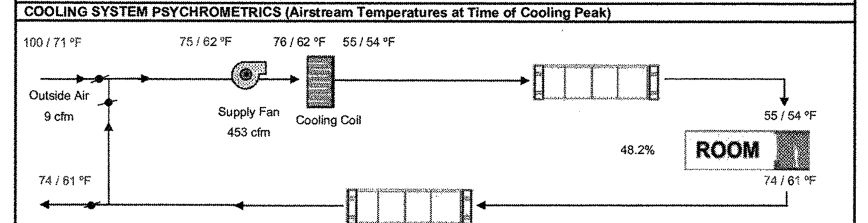

HVAC SYSTEM HEATING AND COOLING LOADS SUMMARY

Project Name	Date
Madera Industrial WHSE	11/18/2021
System Name	Floor Area
Building C Suite #18	159

ENGINEERING CHECKS	
Number of Systems	1
Heating System	
Output per System	12,000
Total Output (Btuh)	12,000
Output (Btuh/sqft)	75.6
Cooling System	
Output per System	9,000
Total Output (Btuh)	9,000
Total Output (Tons)	0.8
Total Output (Btuh/sqft)	56.7
Total Output (sqft/Ton)	211.7
Air System	
CFM per System	453
Airflow (cfm)	453
Airflow (cfm/sqft)	2.85
Airflow (cfm/Ton)	604.0
Outside Air (%)	2.0%
Outside Air (cfm/sqft)	0.06

Note: values above given at ARI conditions

SYSTEM LOAD	COIL COOLING PEAK			COIL HTG. PEAK	
	CFM	Sensible	Latent	CFM	Sensible
Total Room Loads	128	2,557	336	35	1,319
Return Vented Lighting		0			
Return Air Ducts		128			66
Return Fan		0			0
Ventilation	9	250	65	9	449
Supply Fan		478			-478
Supply Air Ducts		128			68
TOTAL SYSTEM LOAD		3,541	401		1,423

HVAC EQUIPMENT SELECTION	Cooling Sensible	Cooling Latent	Heating Sensible
Fujitsu AOUG09LMAS1/ ASUG09LMAS	8,087	0	12,000
Total Adjusted System Output (Adjusted for Peak Design conditions)	8,087	0	12,000
TIME OF SYSTEM PEAK	Aug 2 PM		Jan 1 AM

HEATING SYSTEM PSYCHROMETRICS (Airstream Temperatures at Time of Heating Peak)

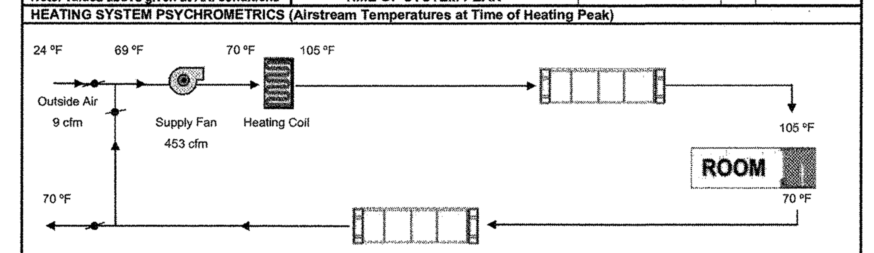

COOLING SYSTEM PSYCHROMETRICS (Airstream Temperatures at Time of Cooling Peak)

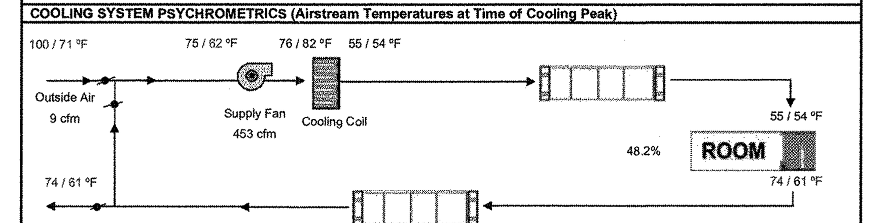

HVAC SYSTEM HEATING AND COOLING LOADS SUMMARY

Project Name	Date
Madera Industrial WHSE	11/18/2021
System Name	Floor Area
Building C Suite #19	159

ENGINEERING CHECKS	
Number of Systems	1
Heating System	
Output per System	12,000
Total Output (Btuh)	12,000
Output (Btuh/sqft)	75.6
Cooling System	
Output per System	9,000
Total Output (Btuh)	9,000
Total Output (Tons)	0.8
Total Output (Btuh/sqft)	56.7
Total Output (sqft/Ton)	211.7
Air System	
CFM per System	453
Airflow (cfm)	453
Airflow (cfm/sqft)	2.85
Airflow (cfm/Ton)	604.0
Outside Air (%)	2.0%
Outside Air (cfm/sqft)	0.06

Note: values above given at ARI conditions

SYSTEM LOAD	COIL COOLING PEAK			COIL HTG. PEAK	
	CFM	Sensible	Latent	CFM	Sensible
Total Room Loads	139	2,785	336	45	1,660
Return Vented Lighting		0			
Return Air Ducts		139			83
Return Fan		0			0
Ventilation	9	250	65	9	449
Supply Fan		478			-478
Supply Air Ducts		139			83
TOTAL SYSTEM LOAD		3,791	401		1,798

HVAC EQUIPMENT SELECTION	Cooling Sensible	Cooling Latent	Heating Sensible
Fujitsu AOUG09LMAS1/ ASUG09LMAS	8,088	0	12,000
Total Adjusted System Output (Adjusted for Peak Design conditions)	8,088	0	12,000
TIME OF SYSTEM PEAK	Aug 2 PM		Jan 1 AM

HEATING SYSTEM PSYCHROMETRICS (Airstream Temperatures at Time of Heating Peak)

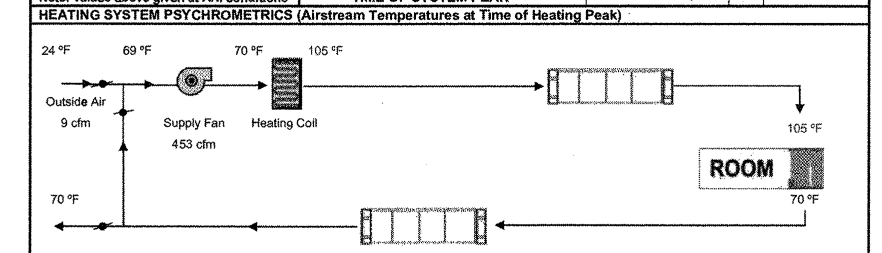

COOLING SYSTEM PSYCHROMETRICS (Airstream Temperatures at Time of Cooling Peak)

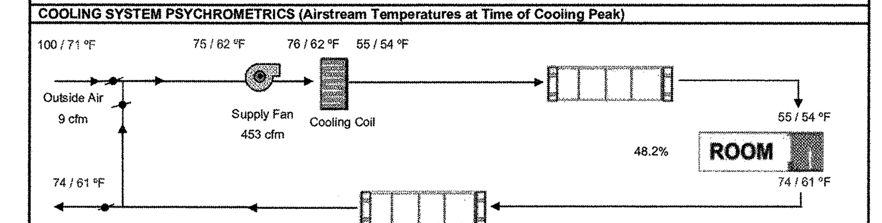

2019CBC
City of Madera
Building Department
The approval of these plans does not prevent the City of Madera from requiring correction of errors or omissions in the plans specifications, or construction. Subject to field inspections and approval ... Codes and Ordinances
APPROVED
By:
Date: MAR 0 3 2022

These plans or drawings or any part of these publications are the exclusive propery of VAR, and may not be reproduced, or transmitted in any form or by means, recording, electronic, mechanical, photocoping or otherwise without written permission by VAR. Copies of these drawings are supplied to the owner or the Building contractor and, otherwise for the use of this project only. Any Re-use of these drawings or documents is prohibited without the written permission of VAR. If VAR is not awarded the project, VAR will not warranty these plans, drawings or contents and will not assume any liability or responsibility for the unauthorized use of these plans or drawings, and the plans or drawings and contents must be returned to VAR immediately.

VAR
Since 1970
825 S Topeka Ave
Fresno CA, 93721
559-237-3188

Valley Air Conditioning & Repair, Inc.
VAR
Since 1970

50 Years of Indoor comfort.

Air Conditioning & Heating
Custom Sheet Metal
Sales & Service

Signed Steve Mendrin Date 11-18-21
Steve Mendrin
License #669606
Valley Air Conditioning & Repair.

BY	REVISION	DATE

ANY INFORMATION OR DATA ON THIS DRAWING IS NOT INTENDED TO BE SUITABLE FOR REUSE BY ANY PERSON, FIRM, CORPORATION, OR ANY OTHERS ON EXTENSIONS OF THIS PROJECT OR FOR ANY USE ON ANY OTHER PROJECT. ANY REUSE WITHOUT WRITTEN VERIFICATION AND ADAPTATION BY THE ENGINEER FOR THE SPECIFIC PURPOSE INTENDED WILL BE AT THE USER'S SOLE RISK AND WITHOUT LIABILITY OR LEGAL EXPOSURE TO THE ENGINEER.

SEAL

TYPICAL MECHANICAL FLOOR PLAN

LEASE FLEX. / WAREHOUSE BUILDINGS

FOR

MADERA INDUSTRIAL WHSE, LLC

S. SCHNOOR AVENUE, MADERA, CA

JOB NUMBER	21107
DESIGNED BY	
DRAWN BY	
DATE	9/09/2021
SHEET NUMBER	M10

HVAC SYSTEM HEATING AND COOLING LOADS SUMMARY

Project Name	Date
Madera Industrial WHSE	11/18/2021
System Name	Floor Area
Building D Suite #1	159

ENGINEERING CHECKS	
Number of Systems	1
Heating System	
Output per System	12,000
Total Output (Btuh)	12,000
Output (Btuh/sqft)	75.6
Cooling System	
Output per System	9,000
Total Output (Btuh)	9,000
Total Output (Tons)	0.8
Total Output (Btuh/sqft)	56.7
Total Output (sqft/Ton)	211.7
Air System	
CFM per System	453
Airflow (cfm)	453
Airflow (cfm/sqft)	2.85
Airflow (cfm/Ton)	604.0
Outside Air (%)	2.0%
Outside Air (cfm/sqft)	0.06
Note: values above given at ARI conditions	

SYSTEM LOAD	COIL COOLING PEAK			COIL HTG. PEAK	
	CFM	Sensible	Latent	CFM	Sensible
Total Room Loads	125	2,503	336	45	1,660
Return Vented Lighting		0			
Return Air Ducts		125			83
Return Fan		0			0
Ventilation	9	262	65	9	449
Supply Fan		478			-478
Supply Air Ducts		125			83
TOTAL SYSTEM LOAD		3,493	401		1,798

HVAC EQUIPMENT SELECTION			
Fujitsu AOUG09LMAS1/ ASUG09LMAS	8,039	0	12,000
Total Adjusted System Output (Adjusted for Peak Design conditions)	8,039	0	12,000
TIME OF SYSTEM PEAK	Jul 3 PM		Jan 1 AM

HEATING SYSTEM PSYCHROMETRICS (Airstream Temperatures at Time of Heating Peak)

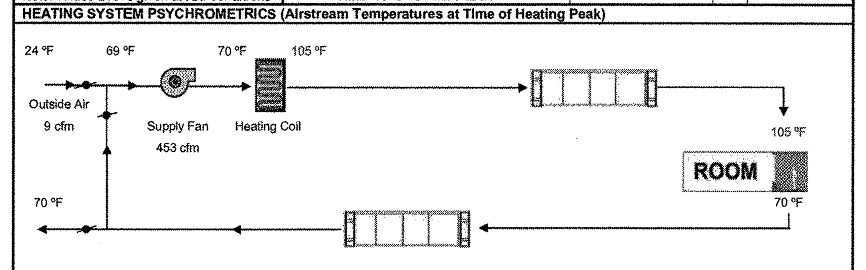

COOLING SYSTEM PSYCHROMETRICS (Airstream Temperatures at Time of Cooling Peak)

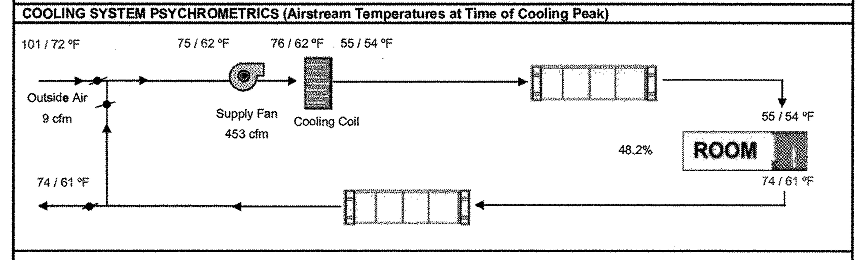

HVAC SYSTEM HEATING AND COOLING LOADS SUMMARY

Project Name	Date
Madera Industrial WHSE	11/18/2021
System Name	Floor Area
Building D Suite #2	159

ENGINEERING CHECKS	
Number of Systems	1
Heating System	
Output per System	12,000
Total Output (Btuh)	12,000
Output (Btuh/sqft)	75.6
Cooling System	
Output per System	9,000
Total Output (Btuh)	9,000
Total Output (Tons)	0.8
Total Output (Btuh/sqft)	56.7
Total Output (sqft/Ton)	211.7
Air System	
CFM per System	453
Airflow (cfm)	453
Airflow (cfm/sqft)	2.85
Airflow (cfm/Ton)	604.0
Outside Air (%)	2.0%
Outside Air (cfm/sqft)	0.06
Note: values above given at ARI conditions	

SYSTEM LOAD	COIL COOLING PEAK			COIL HTG. PEAK	
	CFM	Sensible	Latent	CFM	Sensible
Total Room Loads	128	2,557	336	35	1,319
Return Vented Lighting		0			
Return Air Ducts		128			66
Return Fan		0			0
Ventilation	9	250	65	9	449
Supply Fan		478			-478
Supply Air Ducts		128			66
TOTAL SYSTEM LOAD		3,541	401		1,423

HVAC EQUIPMENT SELECTION			
Fujitsu AOUG09LMAS1/ ASUG09LMAS	8,087	0	12,000
Total Adjusted System Output (Adjusted for Peak Design conditions)	8,087	0	12,000
TIME OF SYSTEM PEAK	Aug 2 PM		Jan 1 AM

HEATING SYSTEM PSYCHROMETRICS (Airstream Temperatures at Time of Heating Peak)

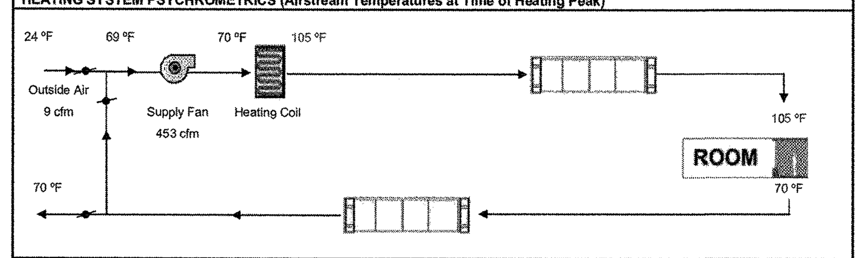

COOLING SYSTEM PSYCHROMETRICS (Airstream Temperatures at Time of Cooling Peak)

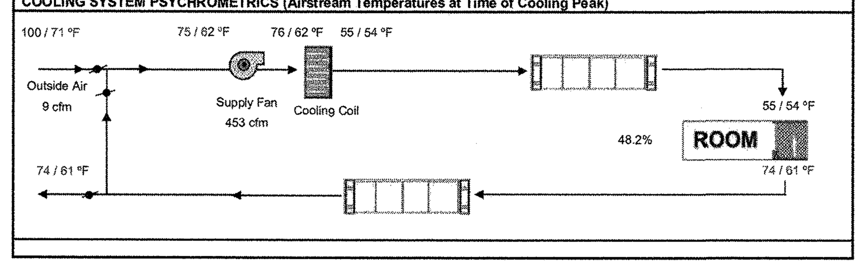

HVAC SYSTEM HEATING AND COOLING LOADS SUMMARY

Project Name	Date
Madera Industrial WHSE	11/18/2021
System Name	Floor Area
Building D Suite #3	159

ENGINEERING CHECKS	
Number of Systems	1
Heating System	
Output per System	12,000
Total Output (Btuh)	12,000
Output (Btuh/sqft)	75.6
Cooling System	
Output per System	9,000
Total Output (Btuh)	9,000
Total Output (Tons)	0.8
Total Output (Btuh/sqft)	56.7
Total Output (sqft/Ton)	211.7
Air System	
CFM per System	453
Airflow (cfm)	453
Airflow (cfm/sqft)	2.85
Airflow (cfm/Ton)	604.0
Outside Air (%)	2.0%
Outside Air (cfm/sqft)	0.06
Note: values above given at ARI conditions	

SYSTEM LOAD	COIL COOLING PEAK			COIL HTG. PEAK	
	CFM	Sensible	Latent	CFM	Sensible
Total Room Loads	113	2,277	336	35	1,319
Return Vented Lighting		0			
Return Air Ducts		114			66
Return Fan		0			0
Ventilation	9	250	65	9	449
Supply Fan		478			-478
Supply Air Ducts		114			66
TOTAL SYSTEM LOAD		3,233	401		1,423

HVAC EQUIPMENT SELECTION			
Fujitsu AOUG09LMAS1/ ASUG09LMAS	8,086	0	12,000
Total Adjusted System Output (Adjusted for Peak Design conditions)	8,086	0	12,000
TIME OF SYSTEM PEAK	Jul 2 PM		Jan 1 AM

HEATING SYSTEM PSYCHROMETRICS (Airstream Temperatures at Time of Heating Peak)

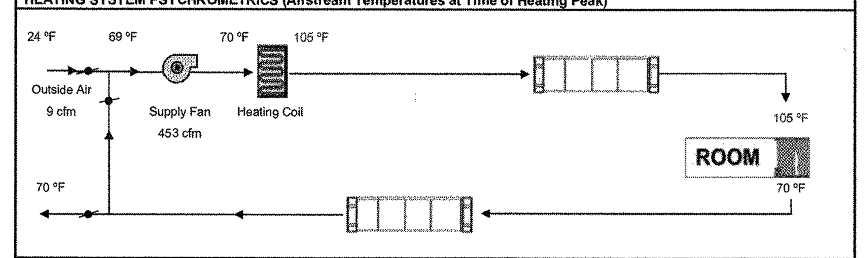

COOLING SYSTEM PSYCHROMETRICS (Airstream Temperatures at Time of Cooling Peak)

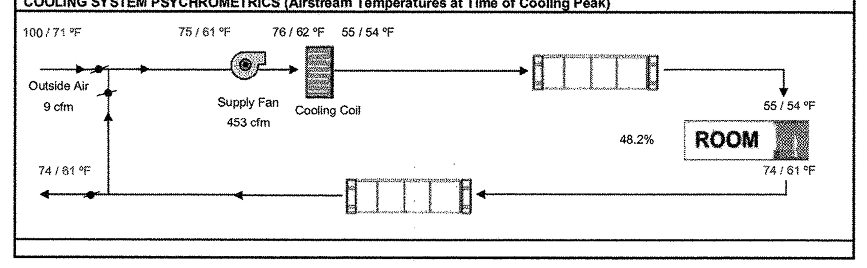

HVAC SYSTEM HEATING AND COOLING LOADS SUMMARY

Project Name	Date
Madera Industrial WHSE	11/18/2021
System Name	Floor Area
Building D Suite #4	159

ENGINEERING CHECKS	
Number of Systems	1
Heating System	
Output per System	12,000
Total Output (Btuh)	12,000
Output (Btuh/sqft)	75.6
Cooling System	
Output per System	9,000
Total Output (Btuh)	9,000
Total Output (Tons)	0.8
Total Output (Btuh/sqft)	56.7
Total Output (sqft/Ton)	211.7
Air System	
CFM per System	453
Airflow (cfm)	453
Airflow (cfm/sqft)	2.85
Airflow (cfm/Ton)	604.0
Outside Air (%)	2.0%
Outside Air (cfm/sqft)	0.06
Note: values above given at ARI conditions	

SYSTEM LOAD	COIL COOLING PEAK			COIL HTG. PEAK	
	CFM	Sensible	Latent	CFM	Sensible
Total Room Loads	113	2,277	336	35	1,319
Return Vented Lighting		0			
Return Air Ducts		114			66
Return Fan		0			0
Ventilation	9	250	65	9	449
Supply Fan		478			-478
Supply Air Ducts		114			66
TOTAL SYSTEM LOAD		3,233	401		1,423

HVAC EQUIPMENT SELECTION			
Fujitsu AOUG09LMAS1/ ASUG09LMAS	8,086	0	12,000
Total Adjusted System Output (Adjusted for Peak Design conditions)	8,086	0	12,000
TIME OF SYSTEM PEAK	Jul 2 PM		Jan 1 AM

HEATING SYSTEM PSYCHROMETRICS (Airstream Temperatures at Time of Heating Peak)

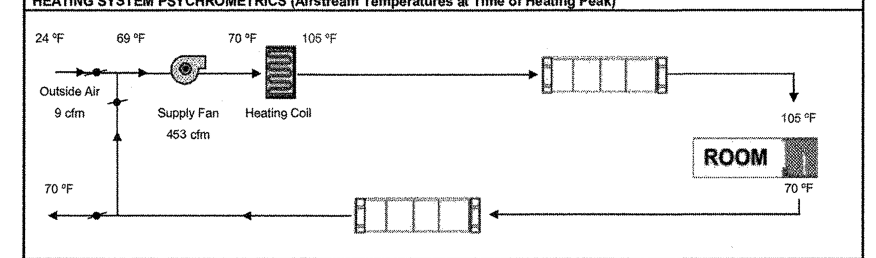

COOLING SYSTEM PSYCHROMETRICS (Airstream Temperatures at Time of Cooling Peak)

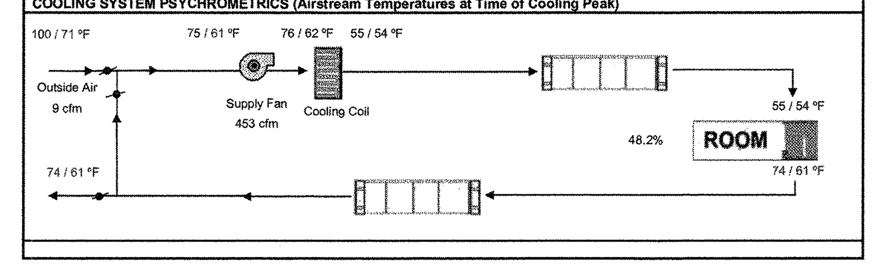

HVAC SYSTEM HEATING AND COOLING LOADS SUMMARY

Project Name	Date
Madera Industrial WHSE	11/18/2021
System Name	Floor Area
Building D Suite #5	159

ENGINEERING CHECKS	
Number of Systems	1
Heating System	
Output per System	12,000
Total Output (Btuh)	12,000
Output (Btuh/sqft)	75.6
Cooling System	
Output per System	9,000
Total Output (Btuh)	9,000
Total Output (Tons)	0.8
Total Output (Btuh/sqft)	56.7
Total Output (sqft/Ton)	211.7
Air System	
CFM per System	453
Airflow (cfm)	453
Airflow (cfm/sqft)	2.85
Airflow (cfm/Ton)	604.0
Outside Air (%)	2.0%
Outside Air (cfm/sqft)	0.06
Note: values above given at ARI conditions	

SYSTEM LOAD	COIL COOLING PEAK			COIL HTG. PEAK	
	CFM	Sensible	Latent	CFM	Sensible
Total Room Loads	113	2,277	336	35	1,319
Return Vented Lighting		0			
Return Air Ducts		114			66
Return Fan		0			0
Ventilation	9	250	65	9	449
Supply Fan		478			-478
Supply Air Ducts		114			66
TOTAL SYSTEM LOAD		3,233	401		1,423

HVAC EQUIPMENT SELECTION			
Fujitsu AOUG09LMAS1/ ASUG09LMAS	8,086	0	12,000
Total Adjusted System Output (Adjusted for Peak Design conditions)	8,086	0	12,000
TIME OF SYSTEM PEAK	Jul 2 PM		Jan 1 AM

HEATING SYSTEM PSYCHROMETRICS (Airstream Temperatures at Time of Heating Peak)

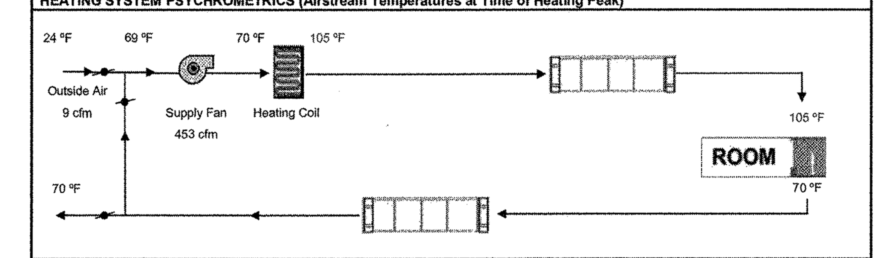

COOLING SYSTEM PSYCHROMETRICS (Airstream Temperatures at Time of Cooling Peak)

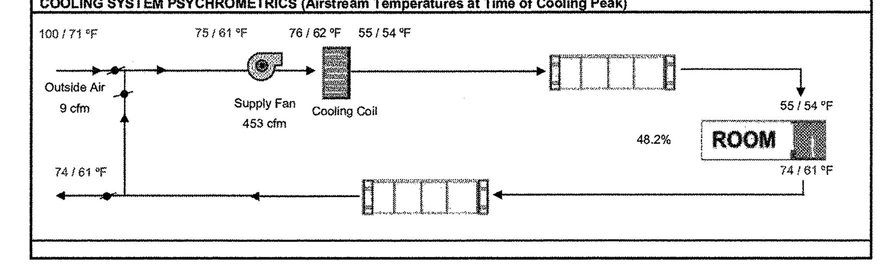

HVAC SYSTEM HEATING AND COOLING LOADS SUMMARY

Project Name	Date
Madera Industrial WHSE	11/18/2021
System Name	Floor Area
Building D Suite #6	159

ENGINEERING CHECKS	
Number of Systems	1
Heating System	
Output per System	12,000
Total Output (Btuh)	12,000
Output (Btuh/sqft)	75.6
Cooling System	
Output per System	9,000
Total Output (Btuh)	9,000
Total Output (Tons)	0.8
Total Output (Btuh/sqft)	56.7
Total Output (sqft/Ton)	211.7
Air System	
CFM per System	453
Airflow (cfm)	453
Airflow (cfm/sqft)	2.85
Airflow (cfm/Ton)	604.0
Outside Air (%)	2.0%
Outside Air (cfm/sqft)	0.06
Note: values above given at ARI conditions	

SYSTEM LOAD	COIL COOLING PEAK			COIL HTG. PEAK	
	CFM	Sensible	Latent	CFM	Sensible
Total Room Loads	113	2,277	336	35	1,319
Return Vented Lighting		0			
Return Air Ducts		114			66
Return Fan		0			0
Ventilation	9	250	65	9	449
Supply Fan		478			-478
Supply Air Ducts		114			66
TOTAL SYSTEM LOAD		3,233	401		1,423

HVAC EQUIPMENT SELECTION			
Fujitsu AOUG09LMAS1/ ASUG09LMAS	8,086	0	12,000
Total Adjusted System Output (Adjusted for Peak Design conditions)	8,086	0	12,000
TIME OF SYSTEM PEAK	Jul 2 PM		Jan 1 AM

HEATING SYSTEM PSYCHROMETRICS (Airstream Temperatures at Time of Heating Peak)

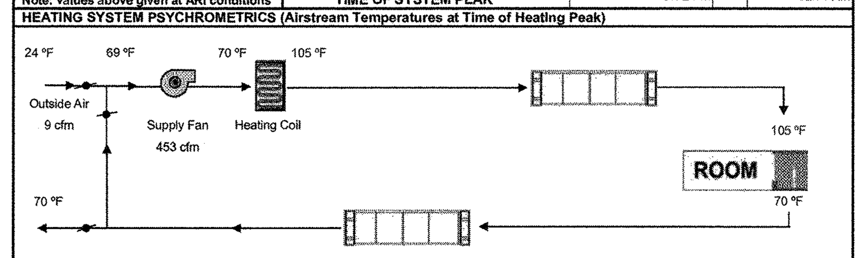

COOLING SYSTEM PSYCHROMETRICS (Airstream Temperatures at Time of Cooling Peak)

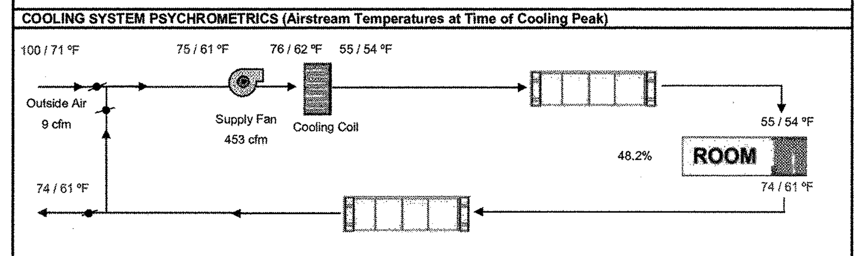

HVAC SYSTEM HEATING AND COOLING LOADS SUMMARY

Project Name	Date
Madera Industrial WHSE	11/18/2021
System Name	Floor Area
Building D Suite #7	159

ENGINEERING CHECKS	
Number of Systems	1
Heating System	
Output per System	12,000
Total Output (Btuh)	12,000
Output (Btuh/sqft)	75.6
Cooling System	
Output per System	9,000
Total Output (Btuh)	9,000
Total Output (Tons)	0.8
Total Output (Btuh/sqft)	56.7
Total Output (sqft/Ton)	211.7
Air System	
CFM per System	453
Airflow (cfm)	453
Airflow (cfm/sqft)	2.85
Airflow (cfm/Ton)	604.0
Outside Air (%)	2.0%
Outside Air (cfm/sqft)	0.06
Note: values above given at ARI conditions	

SYSTEM LOAD	COIL COOLING PEAK			COIL HTG. PEAK	
	CFM	Sensible	Latent	CFM	Sensible
Total Room Loads	113	2,277	336	35	1,319
Return Vented Lighting		0			
Return Air Ducts		114			66
Return Fan		0			0
Ventilation	9	250	65	9	449
Supply Fan		478			-478
Supply Air Ducts		114			66
TOTAL SYSTEM LOAD		3,233	401		1,423

HVAC EQUIPMENT SELECTION			
Fujitsu AOUG09LMAS1/ ASUG09LMAS	8,086	0	12,000
Total Adjusted System Output (Adjusted for Peak Design conditions)	8,086	0	12,000
TIME OF SYSTEM PEAK	Jul 2 PM		Jan 1 AM

HEATING SYSTEM PSYCHROMETRICS (Airstream Temperatures at Time of Heating Peak)

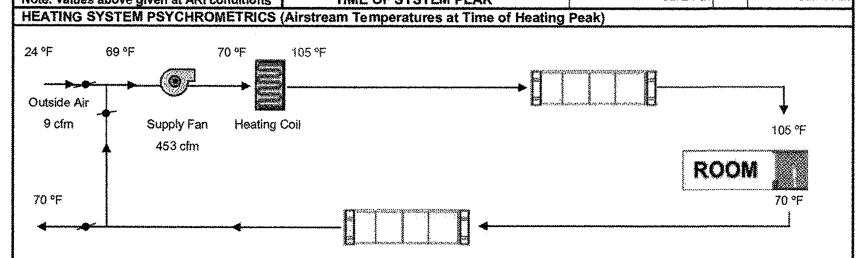

COOLING SYSTEM PSYCHROMETRICS (Airstream Temperatures at Time of Cooling Peak)

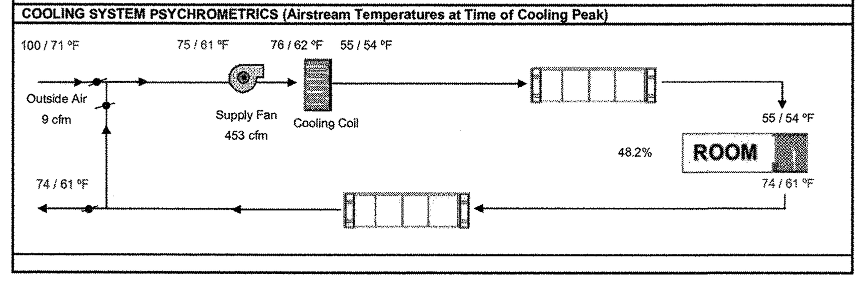

HVAC SYSTEM HEATING AND COOLING LOADS SUMMARY

Project Name	Date
Madera Industrial WHSE	11/18/2021
System Name	Floor Area
Building D Suite #8	159

ENGINEERING CHECKS	
Number of Systems	1
Heating System	
Output per System	12,000
Total Output (Btuh)	12,000
Output (Btuh/sqft)	75.6
Cooling System	
Output per System	9,000
Total Output (Btuh)	9,000
Total Output (Tons)	0.8
Total Output (Btuh/sqft)	56.7
Total Output (sqft/Ton)	211.7
Air System	
CFM per System	453
Airflow (cfm)	453
Airflow (cfm/sqft)	2.85
Airflow (cfm/Ton)	604.0
Outside Air (%)	2.0%
Outside Air (cfm/sqft)	0.06
Note: values above given at ARI conditions	

SYSTEM LOAD	COIL COOLING PEAK			COIL HTG. PEAK	
	CFM	Sensible	Latent	CFM	Sensible
Total Room Loads	113	2,277	336	35	1,319
Return Vented Lighting		0			
Return Air Ducts		114			66
Return Fan		0			0
Ventilation	9	250	65	9	449
Supply Fan		478			-478
Supply Air Ducts		114			66
TOTAL SYSTEM LOAD		3,233	401		1,423

HVAC EQUIPMENT SELECTION			
Fujitsu AOUG09LMAS1/ ASUG09LMAS	8,086	0	12,000
Total Adjusted System Output (Adjusted for Peak Design conditions)	8,086	0	12,000
TIME OF SYSTEM PEAK	Jul 2 PM		Jan 1 AM

HEATING SYSTEM PSYCHROMETRICS (Airstream Temperatures at Time of Heating Peak)

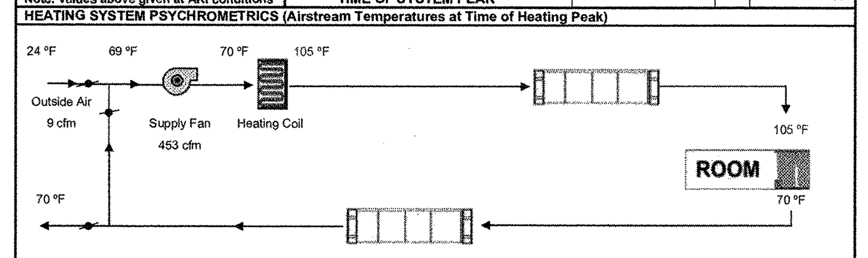

COOLING SYSTEM PSYCHROMETRICS (Airstream Temperatures at Time of Cooling Peak)

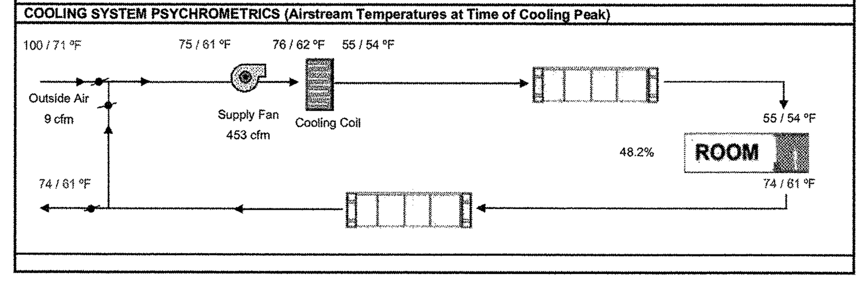

HVAC SYSTEM HEATING AND COOLING LOADS SUMMARY

Project Name	Date
Madera Industrial WHSE	11/18/2021
System Name	Floor Area
Building D Suite #9	159

ENGINEERING CHECKS	
Number of Systems	1
Heating System	
Output per System	12,000
Total Output (Btuh)	12,000
Output (Btuh/sqft)	75.6
Cooling System	
Output per System	9,000
Total Output (Btuh)	9,000
Total Output (Tons)	0.8
Total Output (Btuh/sqft)	56.7
Total Output (sqft/Ton)	211.7
Air System	
CFM per System	453
Airflow (cfm)	453
Airflow (cfm/sqft)	2.85
Airflow (cfm/Ton)	604.0
Outside Air (%)	2.0%
Outside Air (cfm/sqft)	0.06
Note: values above given at ARI conditions	

SYSTEM LOAD	COIL COOLING PEAK			COIL HTG. PEAK	
	CFM	Sensible	Latent	CFM	Sensible
Total Room Loads	113	2,277	336	35	1,319
Return Vented Lighting		0			
Return Air Ducts		114			66
Return Fan		0			0
Ventilation	9	250	65	9	449
Supply Fan		478			-478
Supply Air Ducts		114			66
TOTAL SYSTEM LOAD		3,233	401		1,423

HVAC EQUIPMENT SELECTION			
Fujitsu AOUG09LMAS1/ ASUG09LMAS	8,086	0	12,000
Total Adjusted System Output (Adjusted for Peak Design conditions)	8,086	0	12,000
TIME OF SYSTEM PEAK	Jul 2 PM		Jan 1 AM

HEATING SYSTEM PSYCHROMETRICS (Airstream Temperatures at Time of Heating Peak)

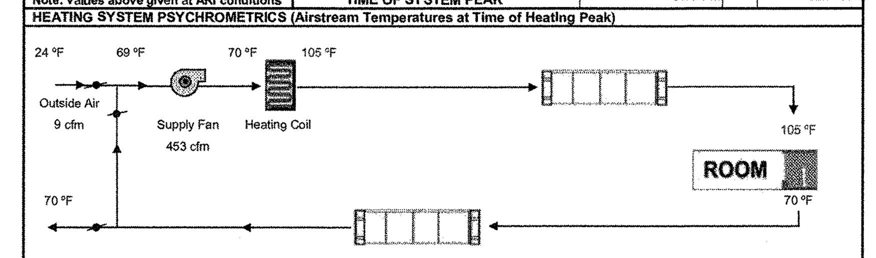

COOLING SYSTEM PSYCHROMETRICS (Airstream Temperatures at Time of Cooling Peak)

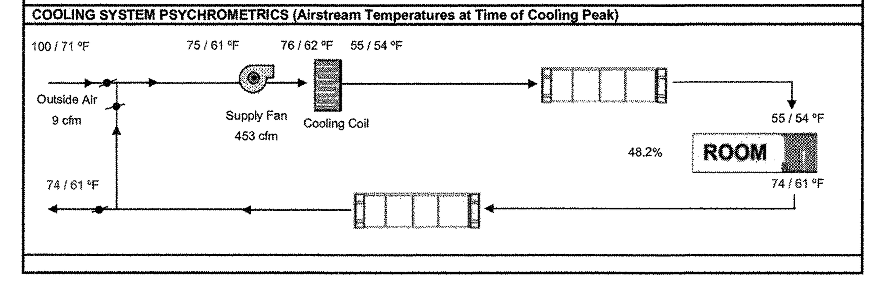

HVAC SYSTEM HEATING AND COOLING LOADS SUMMARY

Project Name	Date
Madera Industrial WHSE	11/18/2021
System Name	Floor Area
Building D Suite #10	159

ENGINEERING CHECKS	
Number of Systems	1
Heating System	
Output per System	12,000
Total Output (Btuh)	12,000
Output (Btuh/sqft)	75.6
Cooling System	
Output per System	9,000
Total Output (Btuh)	9,000
Total Output (Tons)	0.8
Total Output (Btuh/sqft)	56.7
Total Output (sqft/Ton)	211.7
Air System	
CFM per System	453
Airflow (cfm)	453
Airflow (cfm/sqft)	2.85
Airflow (cfm/Ton)	604.0
Outside Air (%)	2.0%
Outside Air (cfm/sqft)	0.06
Note: values above given at ARI conditions	

SYSTEM LOAD	COIL COOLING PEAK			COIL HTG. PEAK	
	CFM	Sensible	Latent	CFM	Sensible
Total Room Loads	113	2,277	336	35	1,319
Return Vented Lighting		0			
Return Air Ducts		114			66
Return Fan		0			0
Ventilation	9	250	65	9	449
Supply Fan		478			-478
Supply Air Ducts		114			66
TOTAL SYSTEM LOAD		3,233	401		1,423

HVAC EQUIPMENT SELECTION			
Fujitsu AOUG09LMAS1/ ASUG09LMAS	8,086	0	12,000
Total Adjusted System Output (Adjusted for Peak Design conditions)	8,086	0	12,000
TIME OF SYSTEM PEAK	Jul 2 PM		Jan 1 AM

HEATING SYSTEM PSYCHROMETRICS (Airstream Temperatures at Time of Heating Peak)

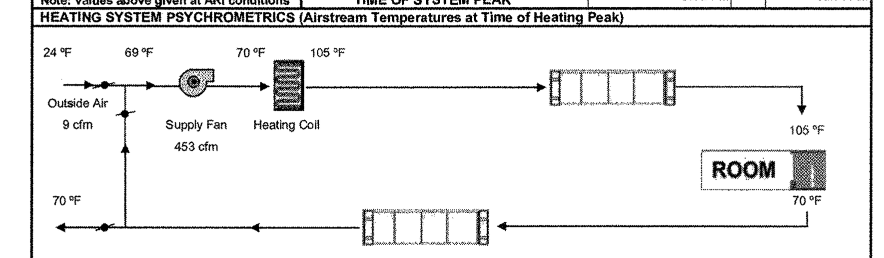

COOLING SYSTEM PSYCHROMETRICS (Airstream Temperatures at Time of Cooling Peak)

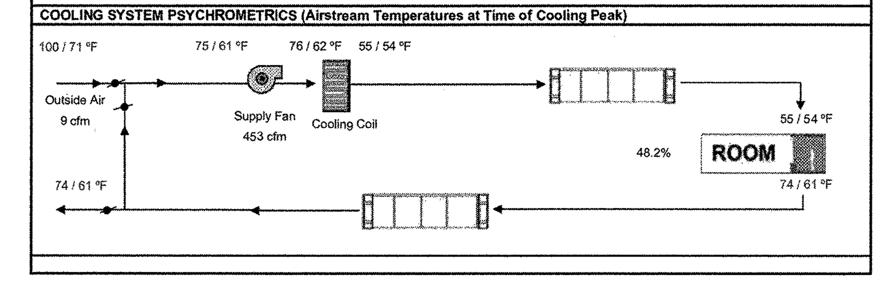

2019CBC
City of Madera
Building Department
The approval of these plans does not prevent the City of Madera from requiring correction of errors or omissions in the plans, specifications of construction. Subject to field inspections and approvals. Laws, Codes and Ordinances
2019CBC 2019CBC
APPROVED
By:
Date: MAR 0 3 2022

These plans or drawings or any part of these publications are the exclusive propery of VAR, and may not be reproduced, or transmitted in any form or by means, recording, electronic, mechanical, photocoping or otherwise without written permission by VAR. Copies of these drawings are supplied to the owner or the Building contractor and, otherwise for the use of this project only. Any Re-use of these drawings or documents is prohibited without the written permission of VAR. If VAR is not awarded the project, VAR will not warranty these plans, drawings or contents and will not assume any liability or responsibility for the unauthorized use of these plans or drawings, and the plans or drawings and contents must be returned to VAR immediately.

Air Conditioning & Heating
Custom Sheet Metal
Sales & Service

VAR
Since 1970
825 S Topeka Ave
Fresno CA, 93721
559-237-3188

Signed Steve Mendrin Date 11-18-21
Steve Mendrin
License #669608
Valley Air Conditioning & Repair.

Valley Air Conditioning & Repair, Inc. VAR Since 1970

50 Years of Indoor comfort.

BY	REVISION	DATE

ANY INFORMATION OR DATA ON THIS DRAWING IS NOT INTENDED TO BE SUITABLE FOR REUSE BY ANY PERSON, FIRM, CORPORATION, OR ANY OTHERS ON EXTENSIONS OF THIS PROJECT OR FOR ANY USE ON ANY OTHER PROJECT. ANY REUSE WITHOUT WRITTEN VERIFICATION AND ADAPTATION BY THE ENGINEER FOR THE SPECIFIC PURPOSE INTENDED WILL BE AT THE USER'S SOLE RISK AND WITHOUT LIABILITY OR LEGAL EXPOSURE TO THE ENGINEER.

SEAL

TYPICAL MECHANICAL FLOOR PLAN

LEASE FLEX. / WAREHOUSE BUILDINGS
FOR
MADERA INDUSTRIAL WHSE, LLC
S. SCHNOOR AVENUE, MADERA, CA

JOB NUMBER	21107
DESIGNED BY	
DRAWN BY	
DATE	9/09/2021
SHEET NUMBER	M11

HVAC SYSTEM HEATING AND COOLING LOADS SUMMARY

Project Name: Madera Industrial WHSE — Date: 11/18/2021
System Name: Building D Suite #11 — Floor Area: 159

ENGINEERING CHECKS	
Number of Systems	1
Heating System	
Output per System	12,000
Total Output (Btuh)	12,000
Output (Btuh/sqft)	75.6
Cooling System	
Output per System	9,000
Total Output (Btuh)	9,000
Total Output (Tons)	0.8
Total Output (Btuh/sqft)	56.7
Total Output (sqft/Ton)	211.7
Air System	
CFM per System	453
Airflow (cfm)	453
Airflow (cfm/sqft)	2.85
Airflow (cfm/Ton)	604.0
Outside Air (%)	2.0%
Outside Air (cfm/sqft)	0.06
Note: values above given at ARI conditions	

SYSTEM LOAD	COIL COOLING PEAK CFM	COIL COOLING PEAK Sensible	COIL COOLING PEAK Latent	COIL HTG. PEAK CFM	COIL HTG. PEAK Sensible
Total Room Loads	113	2,277	336	35	1,319
Return Vented Lighting		0			
Return Air Ducts		114			66
Return Fan		0			0
Ventilation	9	250	65	9	449
Supply Fan		478			-478
Supply Air Ducts		114			66
TOTAL SYSTEM LOAD		3,233	401		1,423
HVAC EQUIPMENT SELECTION					
Fujitsu AOUG09LMAS1/ ASUG09LMAS		8,088	0		12,000
Total Adjusted System Output (Adjusted for Peak Design conditions)		8,086	0		12,000
TIME OF SYSTEM PEAK		Jul 2 PM			Jan 1 AM

HEATING SYSTEM PSYCHROMETRICS (Airstream Temperatures at Time of Heating Peak)

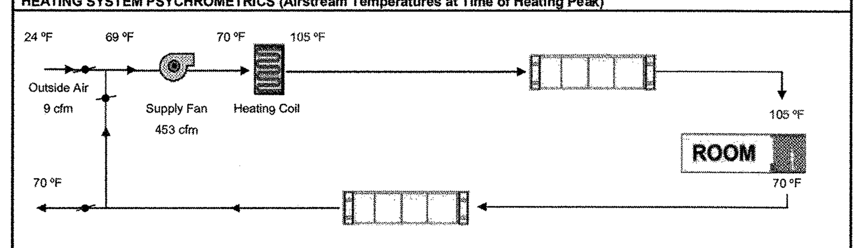

COOLING SYSTEM PSYCHROMETRICS (Airstream Temperatures at Time of Cooling Peak)

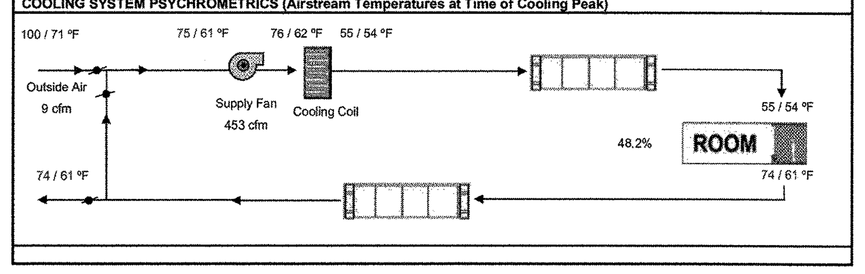

HVAC SYSTEM HEATING AND COOLING LOADS SUMMARY

Project Name: Madera Industrial WHSE — Date: 11/18/2021
System Name: Building D Suite #12 — Floor Area: 159

ENGINEERING CHECKS	
Number of Systems	1
Heating System	
Output per System	12,000
Total Output (Btuh)	12,000
Output (Btuh/sqft)	75.6
Cooling System	
Output per System	9,000
Total Output (Btuh)	9,000
Total Output (Tons)	0.8
Total Output (Btuh/sqft)	56.7
Total Output (sqft/Ton)	211.7
Air System	
CFM per System	453
Airflow (cfm)	453
Airflow (cfm/sqft)	2.85
Airflow (cfm/Ton)	604.0
Outside Air (%)	2.0%
Outside Air (cfm/sqft)	0.06
Note: values above given at ARI conditions	

SYSTEM LOAD	COIL COOLING PEAK CFM	COIL COOLING PEAK Sensible	COIL COOLING PEAK Latent	COIL HTG. PEAK CFM	COIL HTG. PEAK Sensible
Total Room Loads	113	2,277	336	35	1,319
Return Vented Lighting		0			
Return Air Ducts		114			66
Return Fan		0			0
Ventilation	9	250	65	9	449
Supply Fan		478			-478
Supply Air Ducts		114			66
TOTAL SYSTEM LOAD		3,233	401		1,423
HVAC EQUIPMENT SELECTION					
Fujitsu AOUG09LMAS1/ ASUG09LMAS		8,086	0		12,000
Total Adjusted System Output (Adjusted for Peak Design conditions)		8,088	0		12,000
TIME OF SYSTEM PEAK		Jul 2 PM			Jan 1 AM

HEATING SYSTEM PSYCHROMETRICS (Airstream Temperatures at Time of Heating Peak)

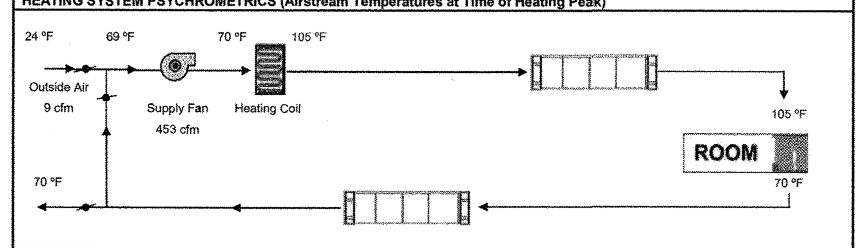

COOLING SYSTEM PSYCHROMETRICS (Airstream Temperatures at Time of Cooling Peak)

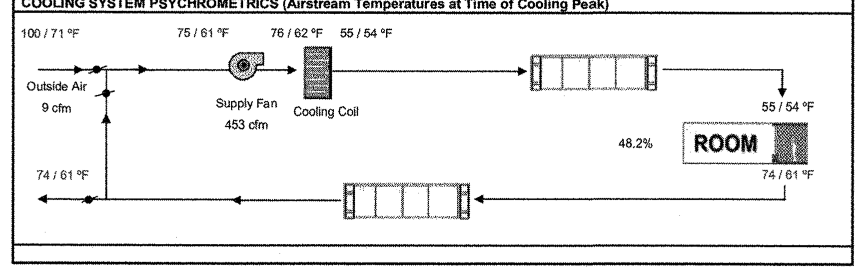

HVAC SYSTEM HEATING AND COOLING LOADS SUMMARY

Project Name: Madera Industrial WHSE — Date: 11/18/2021
System Name: Building D Suite #13 — Floor Area: 159

ENGINEERING CHECKS	
Number of Systems	1
Heating System	
Output per System	12,000
Total Output (Btuh)	12,000
Output (Btuh/sqft)	75.6
Cooling System	
Output per System	9,000
Total Output (Btuh)	9,000
Total Output (Tons)	0.8
Total Output (Btuh/sqft)	56.7
Total Output (sqft/Ton)	211.7
Air System	
CFM per System	453
Airflow (cfm)	453
Airflow (cfm/sqft)	2.85
Airflow (cfm/Ton)	604.0
Outside Air (%)	2.0%
Outside Air (cfm/sqft)	0.06
Note: values above given at ARI conditions	

SYSTEM LOAD	COIL COOLING PEAK CFM	COIL COOLING PEAK Sensible	COIL COOLING PEAK Latent	COIL HTG. PEAK CFM	COIL HTG. PEAK Sensible
Total Room Loads	113	2,277	336	35	1,319
Return Vented Lighting		0			
Return Air Ducts		114			66
Return Fan		0			0
Ventilation	9	250	65	9	449
Supply Fan		478			-478
Supply Air Ducts		114			66
TOTAL SYSTEM LOAD		3,233	401		1,423
HVAC EQUIPMENT SELECTION					
Fujitsu AOUG09LMAS1/ ASUG09LMAS		8,086	0		12,000
Total Adjusted System Output (Adjusted for Peak Design conditions)		8,086	0		12,000
TIME OF SYSTEM PEAK		Jul 2 PM			Jan 1 AM

HEATING SYSTEM PSYCHROMETRICS (Airstream Temperatures at Time of Heating Peak)

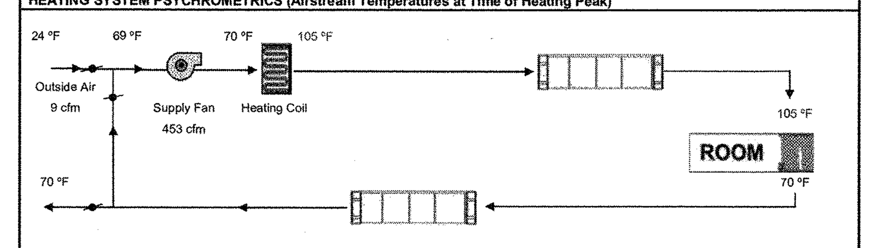

COOLING SYSTEM PSYCHROMETRICS (Airstream Temperatures at Time of Cooling Peak)

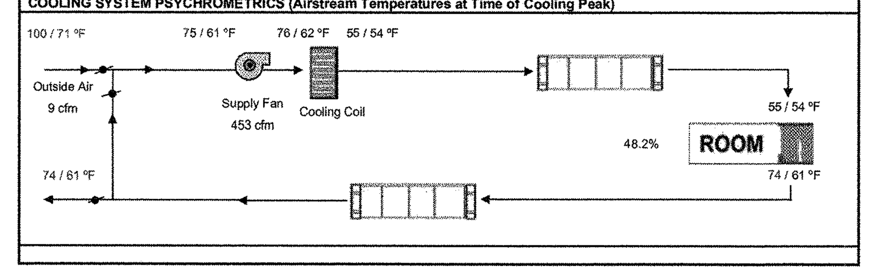

HVAC SYSTEM HEATING AND COOLING LOADS SUMMARY

Project Name: Madera Industrial WHSE — Date: 11/18/2021
System Name: Building D Suite #14 — Floor Area: 159

ENGINEERING CHECKS	
Number of Systems	1
Heating System	
Output per System	12,000
Total Output (Btuh)	12,000
Output (Btuh/sqft)	75.6
Cooling System	
Output per System	9,000
Total Output (Btuh)	9,000
Total Output (Tons)	0.8
Total Output (Btuh/sqft)	56.7
Total Output (sqft/Ton)	211.7
Air System	
CFM per System	453
Airflow (cfm)	453
Airflow (cfm/sqft)	2.85
Airflow (cfm/Ton)	604.0
Outside Air (%)	2.0%
Outside Air (cfm/sqft)	0.06
Note: values above given at ARI conditions	

SYSTEM LOAD	COIL COOLING PEAK CFM	COIL COOLING PEAK Sensible	COIL COOLING PEAK Latent	COIL HTG. PEAK CFM	COIL HTG. PEAK Sensible
Total Room Loads	113	2,277	338	35	1,319
Return Vented Lighting		0			
Return Air Ducts		114			66
Return Fan		0			0
Ventilation	9	250	65	9	449
Supply Fan		478			-478
Supply Air Ducts		114			66
TOTAL SYSTEM LOAD		3,233	401		1,423
HVAC EQUIPMENT SELECTION					
Fujitsu AOUG09LMAS1/ ASUG09LMAS		8,086	0		12,000
Total Adjusted System Output (Adjusted for Peak Design conditions)		8,086	0		12,000
TIME OF SYSTEM PEAK		Jul 2 PM			Jan 1 AM

HEATING SYSTEM PSYCHROMETRICS (Airstream Temperatures at Time of Heating Peak)

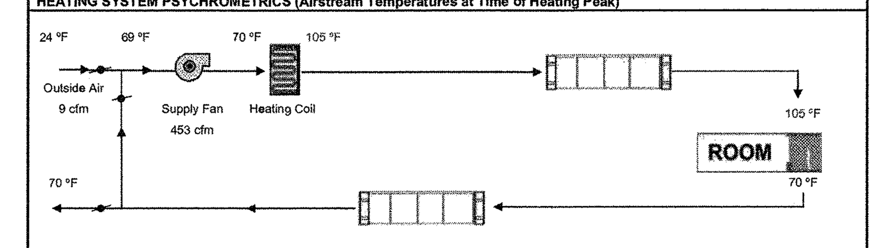

COOLING SYSTEM PSYCHROMETRICS (Airstream Temperatures at Time of Cooling Peak)

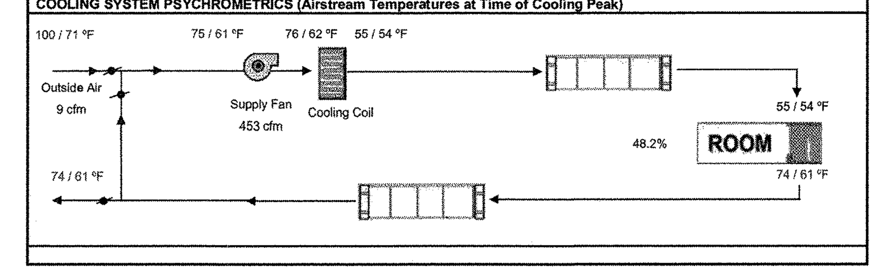

HVAC SYSTEM HEATING AND COOLING LOADS SUMMARY

Project Name: Madera Industrial WHSE — Date: 11/18/2021
System Name: Building D Suite #15 — Floor Area: 159

ENGINEERING CHECKS	
Number of Systems	1
Heating System	
Output per System	12,000
Total Output (Btuh)	12,000
Output (Btuh/sqft)	75.6
Cooling System	
Output per System	9,000
Total Output (Btuh)	9,000
Total Output (Tons)	0.8
Total Output (Btuh/sqft)	56.7
Total Output (sqft/Ton)	211.7
Air System	
CFM per System	453
Airflow (cfm)	453
Airflow (cfm/sqft)	2.85
Airflow (cfm/Ton)	604.0
Outside Air (%)	2.0%
Outside Air (cfm/sqft)	0.06
Note: values above given at ARI conditions	

SYSTEM LOAD	COIL COOLING PEAK CFM	COIL COOLING PEAK Sensible	COIL COOLING PEAK Latent	COIL HTG. PEAK CFM	COIL HTG. PEAK Sensible
Total Room Loads	128	2,557	336	35	1,319
Return Vented Lighting		0			
Return Air Ducts		128			66
Return Fan		0			0
Ventilation	9	250	65	9	449
Supply Fan		478			-478
Supply Air Ducts		128			66
TOTAL SYSTEM LOAD		3,541	401		1,423
HVAC EQUIPMENT SELECTION					
Fujitsu AOUG09LMAS1/ ASUG09LMAS		8,087	0		12,000
Total Adjusted System Output (Adjusted for Peak Design conditions)		8,087	0		12,000
TIME OF SYSTEM PEAK		Aug 2 PM			Jan 1 AM

HEATING SYSTEM PSYCHROMETRICS (Airstream Temperatures at Time of Heating Peak)

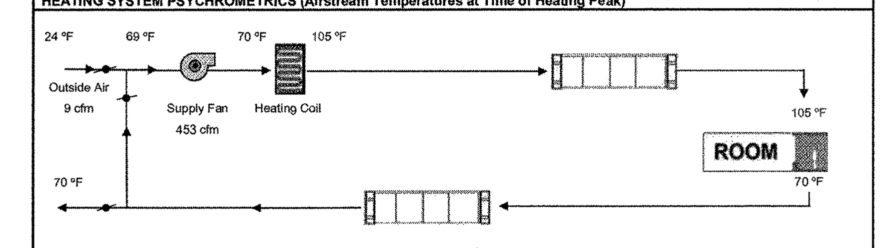

COOLING SYSTEM PSYCHROMETRICS (Airstream Temperatures at Time of Cooling Peak)

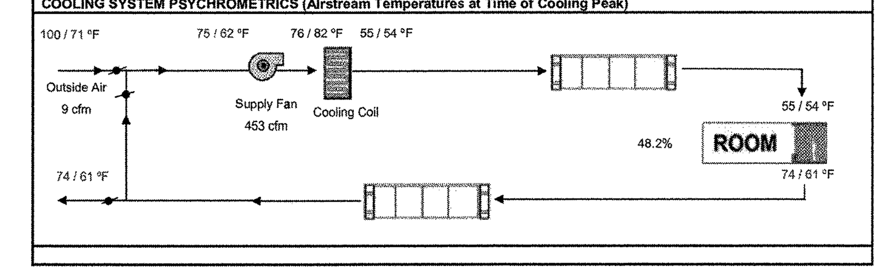

HVAC SYSTEM HEATING AND COOLING LOADS SUMMARY

Project Name: Madera Industrial WHSE — Date: 11/18/2021
System Name: Building D Suite #16 — Floor Area: 159

ENGINEERING CHECKS	
Number of Systems	1
Heating System	
Output per System	12,000
Total Output (Btuh)	12,000
Output (Btuh/sqft)	75.6
Cooling System	
Output per System	9,000
Total Output (Btuh)	9,000
Total Output (Tons)	0.8
Total Output (Btuh/sqft)	56.7
Total Output (sqft/Ton)	211.7
Air System	
CFM per System	453
Airflow (cfm)	453
Airflow (cfm/sqft)	2.85
Airflow (cfm/Ton)	604.0
Outside Air (%)	2.0%
Outside Air (cfm/sqft)	0.06
Note: values above given at ARI conditions	

SYSTEM LOAD	COIL COOLING PEAK CFM	COIL COOLING PEAK Sensible	COIL COOLING PEAK Latent	COIL HTG. PEAK CFM	COIL HTG. PEAK Sensible
Total Room Loads	113	2,277	336	35	1,319
Return Vented Lighting		0			
Return Air Ducts		114			66
Return Fan		0			0
Ventilation	9	250	65	9	449
Supply Fan		478			-478
Supply Air Ducts		114			66
TOTAL SYSTEM LOAD		3,233	401		1,423
HVAC EQUIPMENT SELECTION					
Fujitsu AOUG09LMAS1/ ASUG09LMAS		8,086	0		12,000
Total Adjusted System Output (Adjusted for Peak Design conditions)		8,086	0		12,000
TIME OF SYSTEM PEAK		Jul 2 PM			Jan 1 AM

HEATING SYSTEM PSYCHROMETRICS (Airstream Temperatures at Time of Heating Peak)

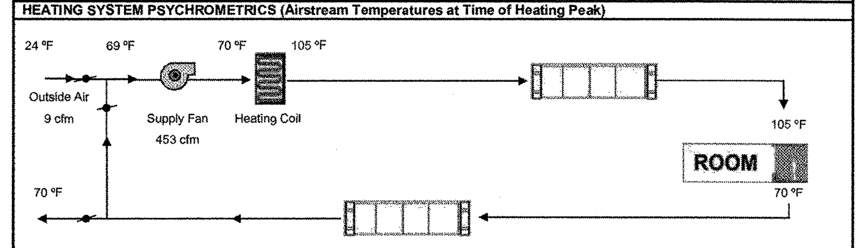

COOLING SYSTEM PSYCHROMETRICS (Airstream Temperatures at Time of Cooling Peak)

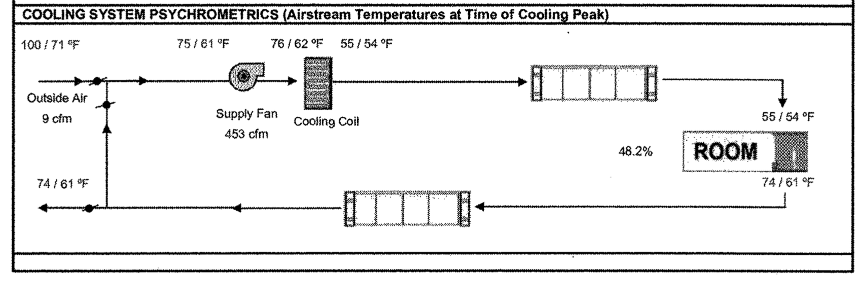

HVAC SYSTEM HEATING AND COOLING LOADS SUMMARY

Project Name: Madera Industrial WHSE — Date: 11/18/2021
System Name: Building D Suite #17 — Floor Area: 159

ENGINEERING CHECKS	
Number of Systems	1
Heating System	
Output per System	12,000
Total Output (Btuh)	12,000
Output (Btuh/sqft)	75.6
Cooling System	
Output per System	9,000
Total Output (Btuh)	9,000
Total Output (Tons)	0.8
Total Output (Btuh/sqft)	56.7
Total Output (sqft/Ton)	211.7
Air System	
CFM per System	453
Airflow (cfm)	453
Airflow (cfm/sqft)	2.85
Airflow (cfm/Ton)	604.0
Outside Air (%)	2.0%
Outside Air (cfm/sqft)	0.06
Note: values above given at ARI conditions	

SYSTEM LOAD	COIL COOLING PEAK CFM	COIL COOLING PEAK Sensible	COIL COOLING PEAK Latent	COIL HTG. PEAK CFM	COIL HTG. PEAK Sensible
Total Room Loads	113	2,277	336	35	1,319
Return Vented Lighting		0			
Return Air Ducts		114			66
Return Fan		0			0
Ventilation	9	250	65	9	449
Supply Fan		478			-478
Supply Air Ducts		114			66
TOTAL SYSTEM LOAD		3,233	401		1,423
HVAC EQUIPMENT SELECTION					
Fujitsu AOUG09LMAS1/ ASUG09LMAS		8,086	0		12,000
Total Adjusted System Output (Adjusted for Peak Design conditions)		8,086	0		12,000
TIME OF SYSTEM PEAK		Jul 2 PM			Jan 1 AM

HEATING SYSTEM PSYCHROMETRICS (Airstream Temperatures at Time of Heating Peak)

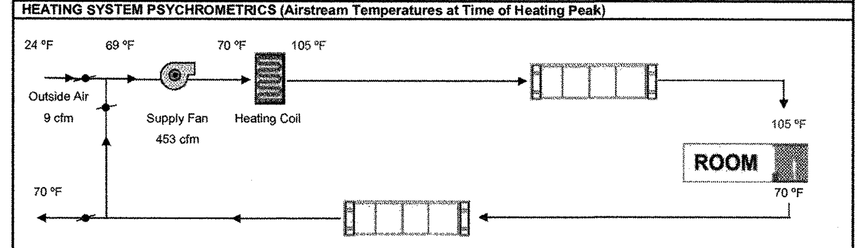

COOLING SYSTEM PSYCHROMETRICS (Airstream Temperatures at Time of Cooling Peak)

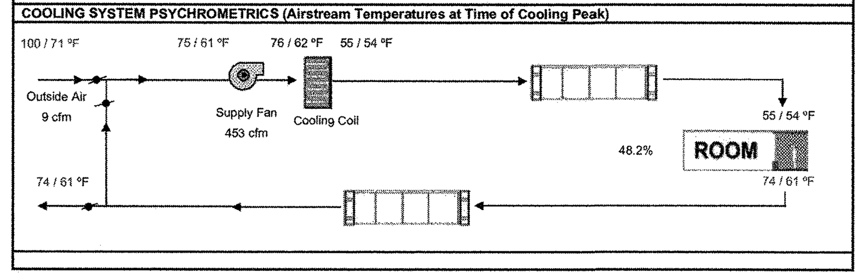

HVAC SYSTEM HEATING AND COOLING LOADS SUMMARY

Project Name: Madera Industrial WHSE — Date: 11/18/2021
System Name: Building D Suite #18 — Floor Area: 159

ENGINEERING CHECKS	
Number of Systems	1
Heating System	
Output per System	12,000
Total Output (Btuh)	12,000
Output (Btuh/sqft)	75.6
Cooling System	
Output per System	9,000
Total Output (Btuh)	9,000
Total Output (Tons)	0.8
Total Output (Btuh/sqft)	56.7
Total Output (sqft/Ton)	211.7
Air System	
CFM per System	453
Airflow (cfm)	453
Airflow (cfm/sqft)	2.85
Airflow (cfm/Ton)	604.0
Outside Air (%)	2.0%
Outside Air (cfm/sqft)	0.06
Note: values above given at ARI conditions	

SYSTEM LOAD	COIL COOLING PEAK CFM	COIL COOLING PEAK Sensible	COIL COOLING PEAK Latent	COIL HTG. PEAK CFM	COIL HTG. PEAK Sensible
Total Room Loads	113	2,277	336	35	1,319
Return Vented Lighting		0			
Return Air Ducts		114			66
Return Fan		0			0
Ventilation	9	250	65	9	449
Supply Fan		478			-478
Supply Air Ducts		114			66
TOTAL SYSTEM LOAD		3,233	401		1,423
HVAC EQUIPMENT SELECTION					
Fujitsu AOUG09LMAS1/ ASUG09LMAS		8,086	0		12,000
Total Adjusted System Output (Adjusted for Peak Design conditions)		8,086	0		12,000
TIME OF SYSTEM PEAK		Jul 2 PM			Jan 1 AM

HEATING SYSTEM PSYCHROMETRICS (Airstream Temperatures at Time of Heating Peak)

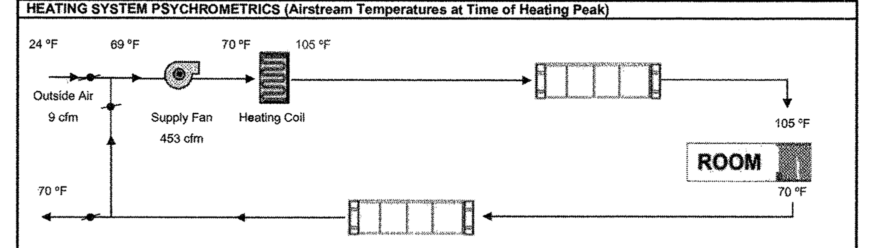

COOLING SYSTEM PSYCHROMETRICS (Airstream Temperatures at Time of Cooling Peak)

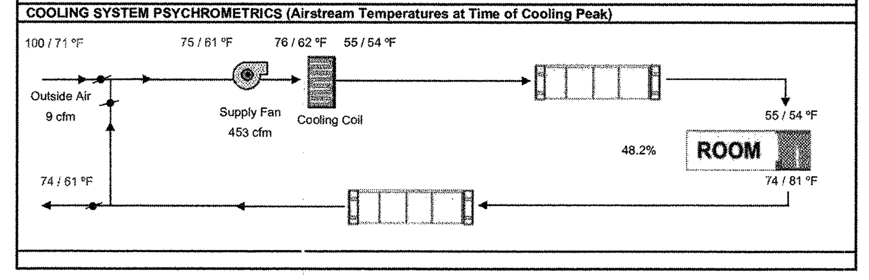

HVAC SYSTEM HEATING AND COOLING LOADS SUMMARY

Project Name: Madera Industrial WHSE — Date: 11/18/2021
System Name: Building D Suite #19 — Floor Area: 159

ENGINEERING CHECKS	
Number of Systems	1
Heating System	
Output per System	12,000
Total Output (Btuh)	12,000
Output (Btuh/sqft)	75.6
Cooling System	
Output per System	9,000
Total Output (Btuh)	9,000
Total Output (Tons)	0.8
Total Output (Btuh/sqft)	56.7
Total Output (sqft/Ton)	211.7
Air System	
CFM per System	453
Airflow (cfm)	453
Airflow (cfm/sqft)	2.85
Airflow (cfm/Ton)	604.0
Outside Air (%)	2.0%
Outside Air (cfm/sqft)	0.06
Note: values above given at ARI conditions	

SYSTEM LOAD	COIL COOLING PEAK CFM	COIL COOLING PEAK Sensible	COIL COOLING PEAK Latent	COIL HTG. PEAK CFM	COIL HTG. PEAK Sensible
Total Room Loads	113	2,277	336	35	1,319
Return Vented Lighting		0			
Return Air Ducts		114			66
Return Fan		0			0
Ventilation	9	250	65	9	449
Supply Fan		478			-478
Supply Air Ducts		114			66
TOTAL SYSTEM LOAD		3,233	401		1,423
HVAC EQUIPMENT SELECTION					
Fujitsu AOUG09LMAS1/ ASUG09LMAS		8,086	0		12,000
Total Adjusted System Output (Adjusted for Peak Design conditions)		8,086	0		12,000
TIME OF SYSTEM PEAK		Jul 2 PM			Jan 1 AM

HEATING SYSTEM PSYCHROMETRICS (Airstream Temperatures at Time of Heating Peak)

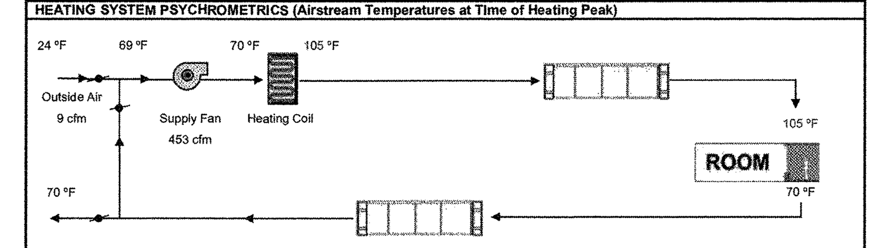

COOLING SYSTEM PSYCHROMETRICS (Airstream Temperatures at Time of Cooling Peak)

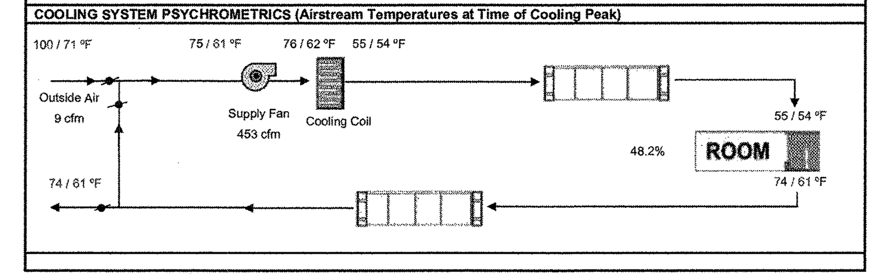

2019CBC City of Madera Building Department
The approval of these plans does not prevent the City of Madera from requiring correction of errors or omissions in the plans, specifications or construction. Subject to field inspections and approvals ... Codes and Ordinances.
APPROVED
By:
Date: MAR 0 3 2022

These plans or drawings or any part of these publications are the exclusive propery of VAR, and may not be reproduced, or transmitted in any form or by means, recording, electronic, mechanical, photocoping or otherwise without written permission by VAR. Copies of these drawings are supplied to the owner or the Building contractor and, otherwise for the use of this project only. Any Re-use of these drawings or documents is prohibited without the written permission of VAR. If VAR is not awarded the project, VAR will not warranty these plans, drawings or contents and will not assume any liability or responsibility for the unauthorized use of these plans or drawings, and the plans or drawings and contents must be returned to VAR immediately.

VAR
Since 1970
825 S Topeka Ave
Fresno CA, 93721
559-237-3188

Valley Air Conditioning & Repair, Inc. — VAR — Since 1970

50 Years of Indoor comfort.

Air Conditioning & Heating
Custom Sheet Metal
Sales & Service

Signed *Steve Mendrin* Date 11-18-21
Steve Mendrin
License #669606
Valley Air Conditioning & Repair.

BY	REVISION	DATE

ANY INFORMATION OR DATA ON THIS DRAWING IS NOT INTENDED TO BE SUITABLE FOR REUSE BY ANY PERSON, FIRM, CORPORATION, OR ANY OTHERS ON EXTENSIONS OF THIS PROJECT OR FOR ANY USE ON ANY OTHER PROJECT. ANY REUSE WITHOUT WRITTEN VERIFICATION AND ADAPTATION BY THE ENGINEER FOR THE SPECIFIC PURPOSE INTENDED WILL BE AT THE USER'S SOLE RISK AND WITHOUT LIABILITY OR LEGAL EXPOSURE TO THE ENGINEER.

SEAL

TYPICAL MECHANICAL FLOOR PLAN

LEASE FLEX. / WAREHOUSE BUILDINGS
FOR
MADERA INDUSTRIAL WHSE, LLC
S. SCHNOOR AVENUE, MADERA, CA

JOB NUMBER: 21107
DESIGNED BY:
DRAWN BY:
DATE: 9/09/2021
SHEET NUMBER: M12

NOTES

1. LIGHTS ON FRONT ONLY ON BUILDINGS A, B.
2. LIGHTS TYPICAL ON BUILDINGS A, B, C, D.

TYPICAL FOR ALL 4 BUILDINGS A, B, C, D
(325, 345, 335, 355 S SCHNOOR AVE MADERA 93637)

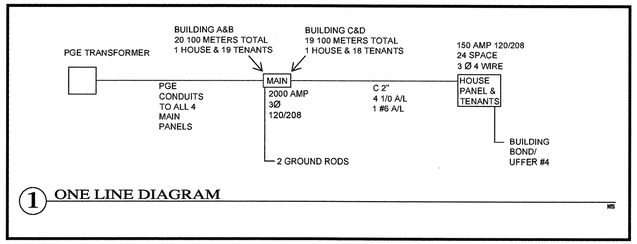

1 ONE LINE DIAGRAM

TYPICAL FOR ALL 4 BUILDINGS A, B, C, D

					PANEL HOUSE 150 AMP MAIN 120/208 3Ø 4 WIRE						
			LOAD AMPS					LOAD AMPS			
CIR	BKR	A	B	C	DESCRIPTION	DESCRIPTION	C	B	A	BKR	CIR
1	20	12			OUTSIDE LIGHTS	OUTSIDE LIGHTS			12	20	2
3	II		12		II	II		12		II	4
5	20			10	GATES	EV FUTURE	32			40	6
7	20	12			SUMP PUMP OUTLET	II			32	II	8
9						EV FUTURE		32		40	10
11						II	32			II	12
13						EV FUTURE			32	40	14
15						II		32		II	16
17						EV FUTURE	32			40	18
19						II			32	II	20
21											22
23											24
25											26
27											28
29											30
31											32
33											34
35											36
37											38
39											40
41											42
TOTAL		24	12	10	PHASE A 132 AMPS PHASE B 88 AMPS PHASE C 106 AMPS		96	76	108	TOTAL	

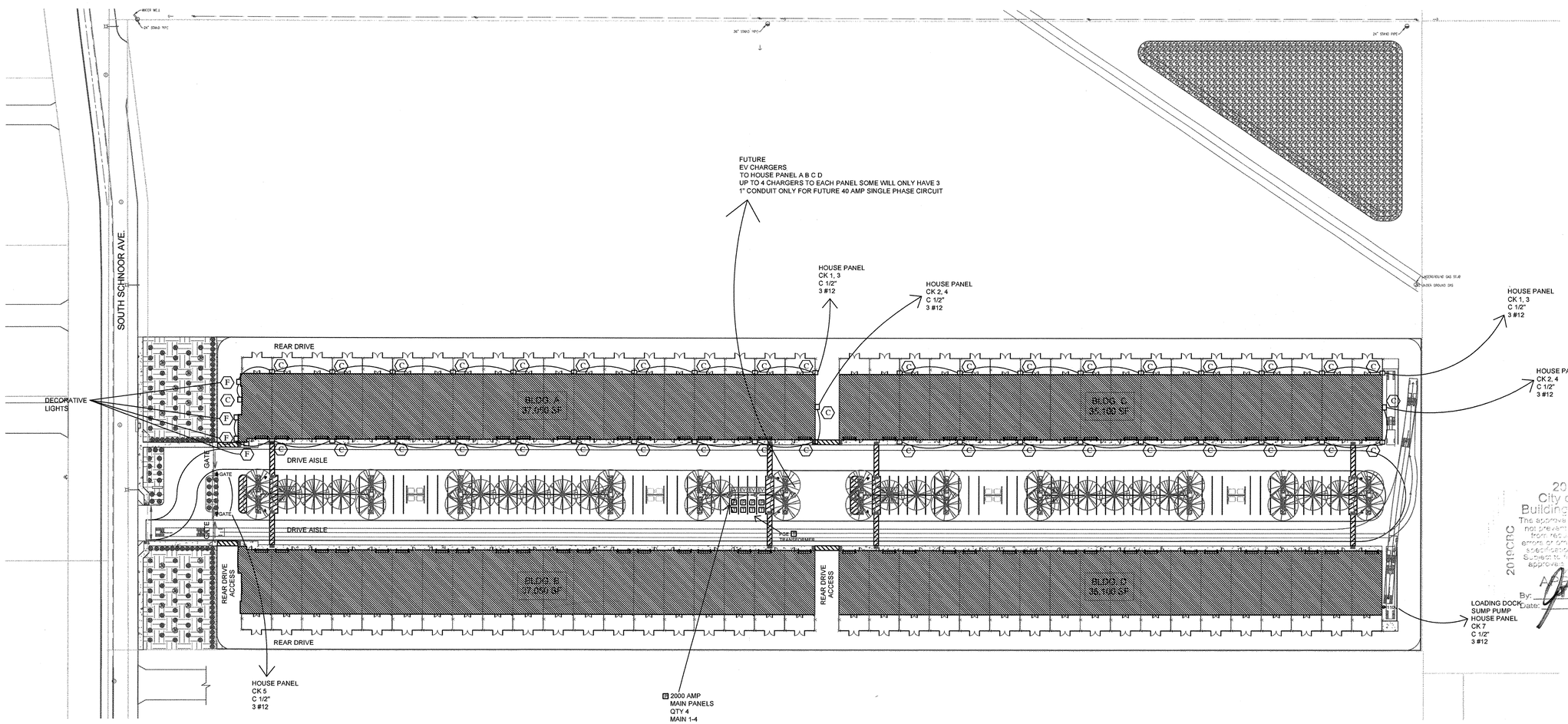

2019CBC
City of Madera
Building Department
The approval of these plans does not prevent the City of Madera from requiring correction of errors or omissions in the plans, specifications or construction. Subsequent reviews of revisions and approved by other depts and agencies
APPROVED
By:
Date: MAR 03 2022

CONTRACTOR:

DBKO
DESIGN BUILD
UCF103283
8839 NORTH CEDAR #374
FRESNO, CA 93720
(559) 930-DBKO

WHSE PARTNERS

PERFORMANCE ELECTRIC

DATE	REVISION	BY
9/08/2021		BN

ANY INFORMATION OR DATA ON THIS DRAWING IS NOT INTENDED TO BE SUITABLE FOR REUSE BY ANY PERSON, FIRM, CORPORATION, OR ANY OTHERS ON EXTENSIONS OF THIS PROJECT OR FOR ANY USE ON ANY OTHER PROJECT. ANY REUSE WITHOUT WRITTEN VERIFICATION OR ADAPTATION BY THE ENGINEER FOR THE SPECIFIC PURPOSE INTENDED WILL BE AT THE USER'S SOLE RISK AND WITHOUT LIABILITY OR LEGAL EXPOSURE TO THE ENGINEER.

SEAL

ELECTRICAL SITE PLAN

LEASE FLEX. / WAREHOUSE BUILDINGS
FOR
MADERA INDUSTRIAL WHSE, LLC.
S. SCHNOOR AVENUE
MADERA, CA 93637

JOB NUMBER	
DESIGNED BY	TD
DRAWN BY	BN
DATE	9/08/2021
SHEET NUMBER	E1

TYPICAL FOR ALL 4 BUILDINGS A, B, C, D

120/208 3Ø 4 WIRE — PANEL L-1-L-4, 100 AMP MAIN LUG — 10,000 BREAKER ATC 4 MAX, ENCL DEPTH SURFACE MOUNTED

CIR	BKR	LOAD AMPS A	B	C	DESCRIPTION	DESCRIPTION	C	LOAD AMPS B	A	BKR	CIR
1	20	5			SHOP OUTLET	SHOP OUTLET			5	20	2
3	20		5		||	||		5		||	4
5	20			5	||	||	5			20	6
7	20	2			SHOP LIGHTS	SWAMP COOLER			10	20	8
9	20		5		OFFICE OUTLET	||		10		20	10
11	20			5	BATH GFI	BATH/ OFFICE LIGHTS	2			20	12
13	20	2			EMERGENCY	SHOP HEATER		41		50	14
15	20		8		OFFICE A/C	||			41	50	16
17	||			8	||	INSTA HOT	12			20	18
19											20
21											22
23											24
25											26
27											28
29											30
31											32
33											34
35											36
37											38
39											40
41											42
TOTAL		9	18	18	PHASE A 65 AMPS PHASE B 74 AMPS PHASE C 37 AMPS		19	56	56	TOTAL	

NOTES

1. SHOP LIGHTS ON MOTION.
2. TYPICAL FOR ALL UNITS IN BUILDINGS A, B, C, D.
3. ALL LIGHTING TO BE LED.
4. ALL OUTLETS REQUIRED BY NEC IN WET LOCATIONS TO BE GFI.
5. ALL WIRE COPPER UNLESS NOTED OTHERWISE.
6. OFFICE/ BATHROOMS WIL BE DONE IN MC

PERFORMANCE ELECTRIC

ELECTRICAL SYMBOL LEGEND

- = OUTLETS
- GFI = GFI OUTLETS
- = EXTERIOR EXIT LIGHTS
- = EMERGENCY/ EXIT LIGHTS
- = LED LIGHTS FOR SHOP ON MOTION
- = 1X4 LED LIGHTS
- = EXTERIOR LIGHT
- S = SWITCH WITH MOTION
- S³ = 3 WAY SWITCH
- F = CONDUITS
- C = CONDUITS
- CK = CIRCUITS

SYMBOL	LUMINAIRE DESCRIPTION	NO. OF LUMIN.	WATTS PER LUMIN.	TOTAL WATTS
A	METALUX WNLED UTILITY LED WRAPAROUND	SEE ATTACHED SPEC SHEETS		
B	ORBIT DECORATIVE WET LOCATION LED EMERGENCY LIGHT	SEE ATTACHED SPEC SHEETS		
C	SYLVANIA NON CUTOFF WALL PACK	SEE ATTACHED SPEC SHEETS		
D	ULTI-BAY AL-HB***/50	SEE ATTACHED SPEC SHEETS		
E	SURE-LITE EMERGENCY LIGHTS	SEE ATTACHED SPEC SHEETS		
F	4" LED ARCHITECTURAL SQUARE CYLINDER UP & DOWNRIGHT	SEE ATTACHED SPEC SHEETS		

LIGHTING SCHEDULE

NO SCALE — 2K

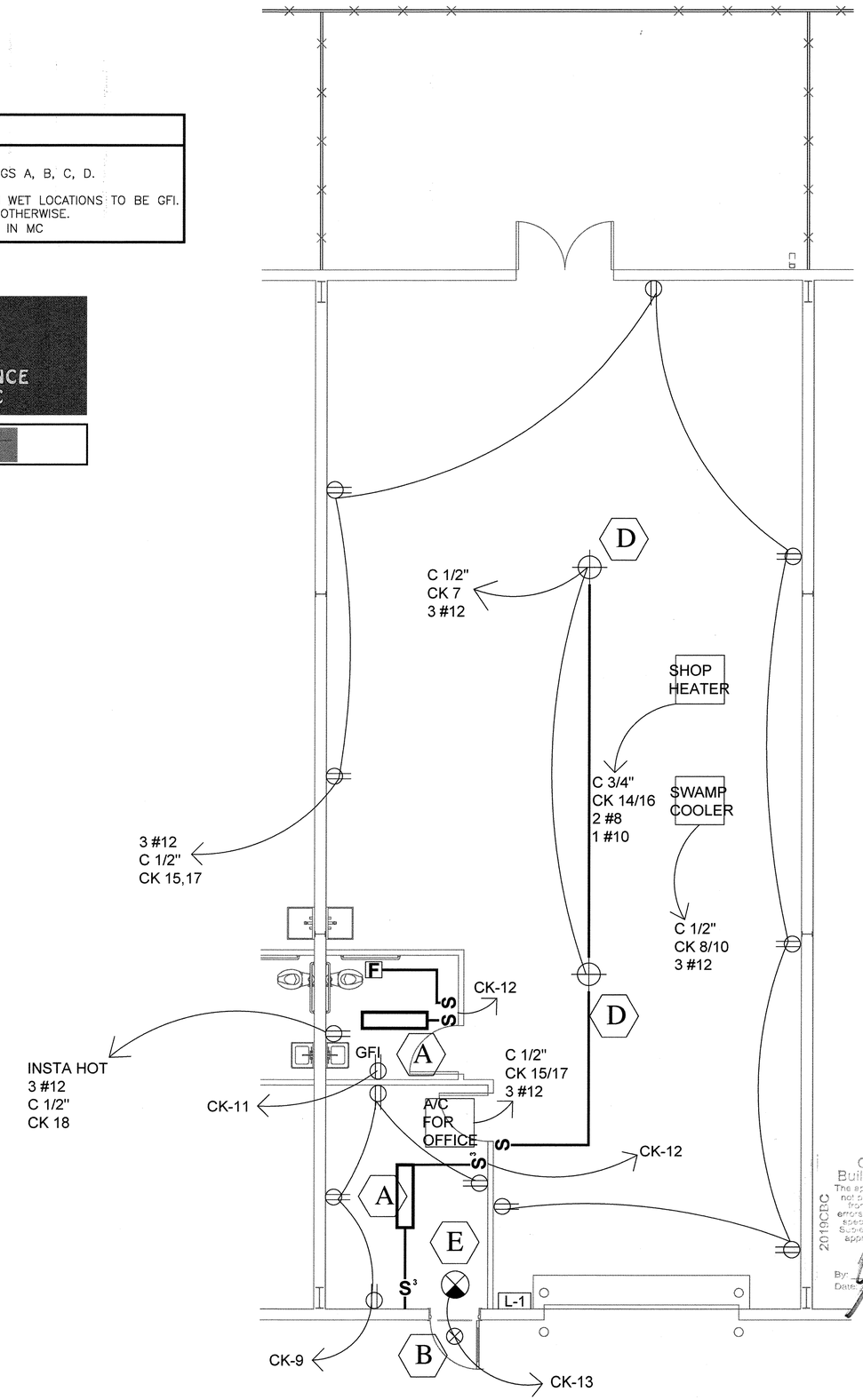

2019CBC
City of Madera
Building Department
The approval of these plans does not prevent the City of Madera from requiring correction of errors or omissions in the plans, specifications or construction. Subject to field inspections and approval of the Codes and Ordinances.
APPROVED
By:
Date: MAR 03 2022

CONTRACTOR:
DBKO DESIGN-BUILD
LIC#1032389
8839 NORTH CEDAR #374
FRESNO, CA 93720
(559) 930-DBKO

WHSE PARTNERS

DATE	REVISION	BY
9/08/2021		BN

ANY INFORMATION OR DATA ON THIS DRAWING IS NOT INTENDED TO BE SUITABLE FOR REUSE BY ANY PERSON, FIRM, CORPORATION, OR ANY OTHERS ON EXTENSIONS OF THIS PROJECT OR FOR ANY USE ON ANY OTHER PROJECT. ANY REUSE WITHOUT WRITTEN VERIFICATION OR ADAPTATION BY THE ENGINEER FOR THE SPECIFIC PURPOSE INTENDED WILL BE AT THE USER'S SOLE RISK AND WITHOUT LIABILITY OR LEGAL EXPOSURE TO THE ENGINEER.

SEAL

ELECTRICAL PLAN

LEASE FLEX. / WAREHOUSE BUILDINGS
FOR
MADERA INDUSTRIAL WHSE, LLC.
S. SCHNOOR AVENUE
MADERA, CA 93637

JOB NUMBER	
DESIGNED BY	TD
DRAWN BY	BN
DATE	9/08/2021
SHEET NUMBER	E2

electrician.com Racewayfill Calculator
by electrician.com

This program calculates the number of same size conductors using the .8 roundoff method. In the Auto Mode this program limits the fill to 40 per cent for over 2 conductors, 31 per cent for only two conductors, and 53 percent for one conductor. Note: THWN, THHN, and THWN-2 have the same areas. RHH, RHW, and RHW-2 without coverings and THW-2, THW, and THHW have the same areas. RH, RHH, RHW, and RHW-2 with covering have the same areas. (This program does not calculate for 3/8 inch FMC and LTFMC - Open Table 348.22 below)
Enter conductor information starting at the top of the form.
ALL AREAS ARE IN SQUARE INCHES.

	Select Insulation	Select Size	Enter No. Conductors	Wire Area	Total Area
(1)	XHHW	1/0 AWG	4	.1825	0.73
(2)	XHHW	6 AWG	1	.0590	0.059
(3)	THHN	14 AWG	0	0	0
(4)	THHN	14 AWG	0	0	0
(5)	THHN	14 AWG	0	0	0

Total: 5 Grand Total Area: 0.789

Select Raceway: Electrical Nonmetallic Tubing

Enter Selections to Start Outputs

Minimum Raceway Size: 2
Allowed Raceway area: 1.282
Available Raceway area: 0.493

Select Fill Value
- (●) Auto
- ( ) 60 Per Cent (nipples)
- ( ) 25 Per Cent (sealoffs)

Maximum number of same size wires at the Per Cent Fill:

Per Cent Fill: 40 %
JAM RATIO (for 3 conductors only):
JAM RATIO between 2.8 and 3.2

To View Table 348.22 for 3/8 inch Flexible Metal and Liquidtight Flexible Metal Conduit

Open Table 348.22 Close Table 348.22

Last updated: 10/6/105 at 20:8:35 GMT - 0800

electrician.com Racewayfill Calculator
by electrician.com

This program calculates the number of same size conductors using the .8 roundoff method. In the Auto Mode this program limits the fill to 40 per cent for over 2 conductors, 31 per cent for only two conductors, and 53 percent for one conductor. Note: THWN, THHN, and THWN-2 have the same areas. RHH, RHW, and RHW-2 without coverings and THW-2, THW, and THHW have the same areas. RH, RHH, RHW, and RHW-2 with covering have the same areas. (This program does not calculate for 3/8 inch FMC and LTFMC - Open Table 348.22 below)
Enter conductor information starting at the top of the form.
ALL AREAS ARE IN SQUARE INCHES.

	Select Insulation	Select Size	Enter No. Conductors	Wire Area	Total Area
(1)	THHN	12 AWG	9	.0133	0.1197
(2)	THHN	14 AWG	0	0	0
(3)	THHN	14 AWG	0	0	0
(4)	THHN	14 AWG	0	0	0
(5)	THHN	14 AWG	0	0	0

Total: 9 Grand Total Area: 0.1197

Select Raceway: EMT

Enter Selections to Start Outputs

Minimum Raceway Size: 1/2
Allowed Raceway area: 0.122
Available Raceway area: 0.0023

Select Fill Value
- (●) Auto
- ( ) 60 Per Cent (nipples)
- ( ) 25 Per Cent (sealoffs)

Maximum number of same size wires at the Per Cent Fill: 9

Per Cent Fill: 40 %
JAM RATIO (for 3 conductors only):
JAM RATIO between 2.8 and 3.2

To View Table 348.22 for 3/8 inch Flexible Metal and Liquidtight Flexible Metal Conduit

Open Table 348.22 Close Table 348.22

Last updated: 10/6/105 at 20:8:35 GMT - 0800

electrician.com Racewayfill Calculator
by electrician.com

This program calculates the number of same size conductors using the .8 roundoff method. In the Auto Mode this program limits the fill to 40 per cent for over 2 conductors, 31 per cent for only two conductors, and 53 percent for one conductor. Note: THWN, THHN, and THWN-2 have the same areas. RHH, RHW, and RHW-2 without coverings and THW-2, THW, and THHW have the same areas. RH, RHH, RHW, and RHW-2 with covering have the same areas. (This program does not calculate for 3/8 inch FMC and LTFMC - Open Table 348.22 below)
Enter condnctor information starting at the top of the form.
ALL AREAS ARE IN SQUARE INCHES.

	Select Insulation	Select Size	Enter No. Conductors	Wire Area	Total Area
(1)	THHN	8 AWG	2	.0366	0.0732
(2)	THHN	10 AWG	1	.0211	0.0211
(3)	THHN	14 AWG	0	0	0
(4)	THHN	14 AWG	0	0	0
(5)	THHN	14 AWG	0	0	0

Total: 3 Grand Total Area: 0.0943

Select Raceway: EMT

Enter Selections to Start Outputs

Minimum Raceway Size: 1/2
Allowed Raceway area: 0.122
Available Raceway area: 0.0277

Select Fill Value
- (●) Auto
- ( ) 60 Per Cent (nipples)
- ( ) 25 Per Cent (sealoffs)

Maximum number of same size wires at the Per Cent Fill:

Per Cent Fill: 40 %
JAM RATIO (for 3 conductors only):
JAM RATIO between 2.8 and 3.2

To View Table 348.22 for 3/8 inch Flexible Metal and Liquidtight Flexible Metal Conduit

Open Table 348.22 Close Table 348.22

Last updated: 10/6/105 at 20:8:35 GMT - 0800

electrician.com Racewayfill Calculator
by electrician.com

This program calculates the number of same size conductors using the .8 roundoff method. In the Auto Mode this program limits the fill to 40 per cent for over 2 conductors, 31 per cent for only two conductors, and 53 percent for one conductor. Note: THWN, THHN, and THWN-2 have the same areas. RHH, RHW, and RHW-2 without coverings and THW-2, THW, and THHW have the same areas. RH, RHH, RHW, and RHW-2 with covering have the same areas. (This program does not calculate for 3/8 inch FMC and LTFMC - Open Table 348.22 below)
Enter conductor information starting at the top of the form.
ALL AREAS ARE IN SQUARE INCHES.

	Select Insulation	Select Size	Enter No. Conductors	Wire Area	Total Area
(1)	THHN	12 AWG	3	.0133	0.0399
(2)	THHN	14 AWG	0	0	0
(3)	THHN	14 AWG	0	0	0
(4)	THHN	14 AWG	0	0	0
(5)	THHN	14 AWG	0	0	0

Total: 3 Grand Total Area: 0.0399

Select Raceway: EMT

Enter Selections to Start Outputs

Minimum Raceway Size: 1/2
Allowed Raceway area: 0.122
Available Raceway area: 0.0821

Select Fill Value
- (●) Auto
- ( ) 60 Per Cent (nipples)
- ( ) 25 Per Cent (sealoffs)

Maximum number of same size wires at the Per Cent Fill: 9

Per Cent Fill: 40 %
JAM RATIO (for 3 conductors only): 4.781
JAM RATIO between 2.8 and 3.2

To View Table 348.22 for 3/8 inch Flexible Metal and Liquidtight Flexible Metal Conduit

Open Table 348.22 Close Table 348.22

Last updated: 10/6/105 at 20:8:35 GMT - 0800

1 OF 4

www.sylvania.com/luminaires

SYLVANIA Luminaires
ValueLED™ Non-Cutoff Wall Pack

Item #
Type
Project
Notes
Date

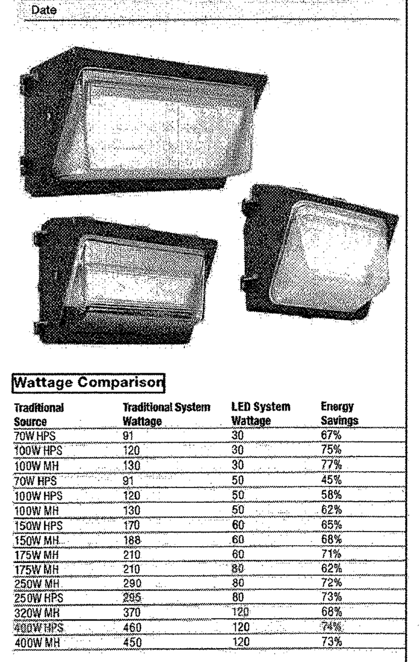

Application
The SYLVANIA ValueLED Wall Pack luminaires are environmentally preferable LED alternatives to traditional HID luminaires, offering up to 77% in energy savings. Ideal in place of traditional luminaires, or as new installations, the Wall Pack series is offered in several wattages/lumen packages for illuminating building exteriors, outdoor corridors, walkways, and stairwells.

Benefits and Features
- DLC listing maximizes rebate opportunities
- Traditional appearance allows for lowered installation costs
- Wide operating temperature (-40°C to +40°C) enables this product to be used in a variety of outdoor environments
- Up to 145 LPW
- 4000K and 5000K color temperature
- CRI >80
- Offered in 30, 50, 60, and 120 watts
- Energy savings up to 77%

Electrical
- 120-277VAC
- Power Factor >90%
- THD <20%
- 0-10V dimmable (60, 80, and 120W versions only)

Rated Life
- 50,000 hours (L_{70})

Warranty
- 5-year

Ambient Operating Range
- -40°F to 104°F (-40°C to 40°C)

Certifications and Listings
- cULus*
- RoHS
- FCC
- DLC

*cULus listed to UL1598 standards for wet locations

Wattage Comparison

Traditional Source	Traditional System Wattage	LED System Wattage	Energy Savings
70W HPS	91	30	67%
100W HPS	120	30	75%
100W MH	130	30	77%
70W HPS	91	50	45%
100W HPS	120	50	58%
100W MH	130	50	62%
150W HPS	170	60	65%
150W MH	188	60	68%
175W MH	210	60	71%
175W MH	210	80	62%
250W MH	290	80	72%
250W HPS	295	80	73%
320W MH	370	120	68%
400W HPS	460	120	74%
400W MH	450	120	73%

Installation
- Luminaire mounts to exterior wall

UL US LISTED RoHS compliant FC DLC

SYLVANIA

LEDLUM067R1 3-20

wall pak Sylvania

3 OF 4

Luminaire Watts	123	W
Ballast/Driver Factor	1.00	
Light Loss Factor	1.00	
Total Proration Factor	1.00	
Luminaire Lumens	14880	lms

175 x 110 ft 22 ft

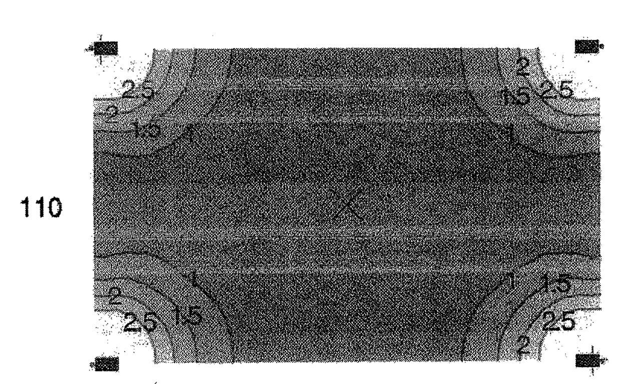

Min: 0.50 fc Avg: 1.1 fc Max: 3.7 fc
Max/Avg: 3.5 Avg/Min: 2.1 Max/Min: 7.4

3 OF 3

Physical Information

Luminaire Description	(A) Depth In (mm)	(B) Height In (mm)
WALPAK4A 30W	9.49 (241)	8.94 (227)
WALPAK4A 50-80W	7.46 (189.5)	9.29 (236)
WALPAK4A 120W	9.4 (238.7)	9.1 (231)

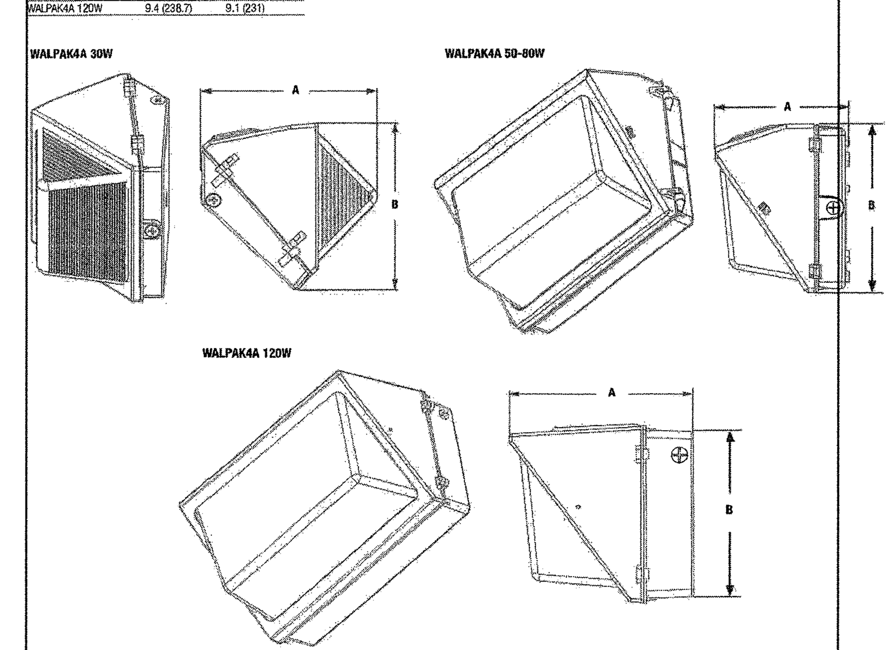

LEDVANCE LLC
200 Ballardvale Street
Wilmington, MA 01887 USA
Phone 1-800-LIGHTBULB (1-800-544-4828)
www.sylvania.com

SYLVANIA and LEDVANCE are registered trademarks. All other trademarks are those of their respective owners. Licensee of product trademark SYLVANIA in general lighting. Specifications subject to change without notice.

/sylvania /sylvania

© 2020 LEDVANCE LLC

Name:
Email:
Phone:

SYLVANIA

2 OF 2

Ordering Guide

WALPAKN	XX /	XXX	UNV	X	8	XX /	NC /	BZ
Product Name WALPAKN = Non-Cutoff Wall Pack	Gen/Size 4A[1], 4B[2], 4C[3]	Wattage 030 = 30 Watts, 050 = 50 Watts, 060 = 60 Watts, 080 = 80 Watts, 120 = 120 Watts	Voltage UNV = 120-277V	Dimming Blank = non dimmable, D = 0-10V (60, 80, 120W)	CRI 8 = >80	Color Temp 40 = 4000K, 50 = 5000K	Distribution NC = Non-Cutoff	Color/Finish BZ= Bronze

1. 30W only
2. 50W, 60W, 80W only
3. 120W only

Ordering Information

Item Number	Ordering Abbreviation	Power (W)	Dimming	Input Voltage (V)	CRI	CCT	BUG Rating	Total Fixture Lumens	DLC	LPW	Color
61656	WALPAKN4A/030UNV840/NC/BZ	30	–	120-277	80	4000K	B1-U3-G3	4050	Prm	138	Bronze
61657	WALPAKN4A/030UNV850/NC/BZ	30	–	120-277	80	5000K	B1-U3-G3	4100	Prm	136	Bronze
61648	WALPAKN4B/050UNV840/NC/BZ	50	–	120-277	80	4000K	B1-U4-G4	7000	Prm	145	Bronze
61649	WALPAKN4B/050UNV850/NC/BZ	50	–	120-277	80	5000K	B1-U4-G4	7000	Prm	145	Bronze
61650	WALPAKN4B/060UNVD840/NC/BZ	60	0-10V	120-277	80	4000K	B1-U4-G5	8500	Prm	140	Bronze
61651	WALPAKN4B/060UNVD850/NC/BZ	60	0-10V	120-277	80	5000K	B1-U4-G5	8500	Prm	142	Bronze
61652	WALPAKN4B/080UNVD840/NC/BZ	80	0-10V	120-277	80	4000K	B2-U5-G5	11,300	Prm	144	Bronze
61653	WALPAKN4B/080UNVD850/NC/BZ	80	0-10V	120-277	80	5000K	B2-U5-G5	11,300	Prm	143	Bronze
61654	WALPAKN4C/120UNVD840/NC/BZ	120	0-10V	120-277	80	4000K	B3-U4-G5	16,200	Prm	137	Bronze
61655	WALPAKN4C/120UNVD850/NC/BZ	120	0-10V	120-277	80	5000K	B3-U4-G5	16,200	Prm	139	Bronze

Photometric Data

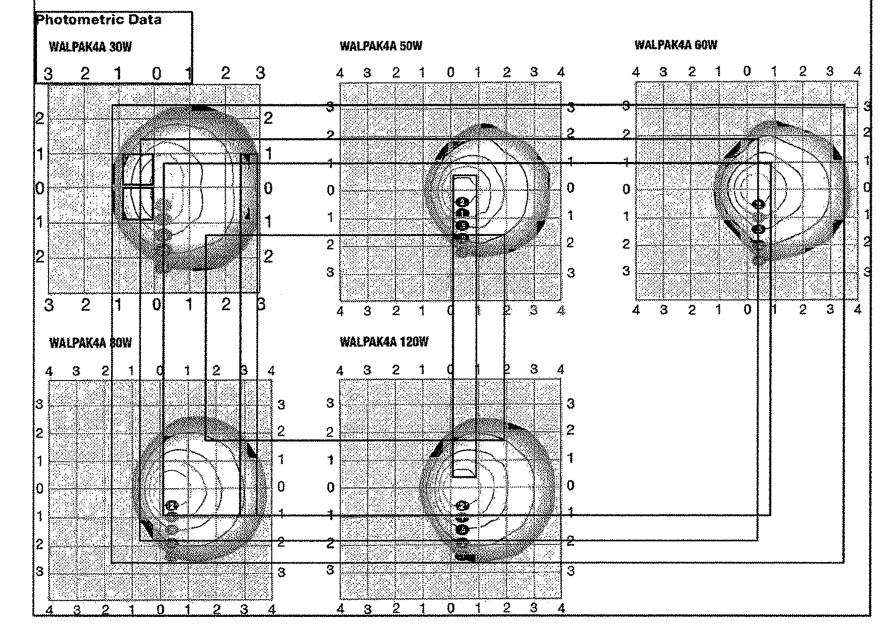

LIGHT-C

PERFORMANCE ELECTRIC

2019CBC
City of Madera
Building Department
The approval of these plans does not prevent the City of Madera from requiring correction of errors or omissions in the plans, specifications or construction. Subject to field inspections and approvals. Laws, Codes and Ordinances.
APPROVED
By MAR 0 3 2022
2019CBC 2019CBC

CONTRACTOR:
DBKO DESIGN BUILD
LIC#1032283
8839 NORTH CEDAR #374
FRESNO, CA 93720
(559) 930-DBKO
WHSE PARTNERS

BY	REVISION	DATE
BN		9/08/2021

ANY INFORMATION OR DATA ON THIS DRAWING IS NOT INTENDED TO BE SUITABLE FOR REUSE BY ANY PERSON, FIRM, CORPORATION, OR ANY OTHERS ON EXTENSIONS OF THIS PROJECT OR FOR ANY USE ON ANY OTHER PROJECT. ANY REUSE WITHOUT WRITTEN VERIFICATION AND ADAPTATION BY THE ENGINEER FOR THE SPECIFIC PURPOSE INTENDED WILL BE AT THE USER'S SOLE RISK AND WITHOUT LIABILITY OR LEGAL EXPOSURE TO THE ENGINEER.

SEAL

LEASE FLEX. / WAREHOUSE BUILDINGS
FOR
MADERA INDUSTRIAL WHSE, LLC.
S. SCHNOOR AVENUE
MADERA, CA 93637

JOB NUMBER	
DESIGNED BY	TD
DRAWN BY	BN
DATE	9/08/2021
SHEET NUMBER	E3

TECHNICAL DATASHEET

ALL LED

ULTI-BAY AL-HB***/50

ULTIMATE PERFORMANCE LED HIGHBAY

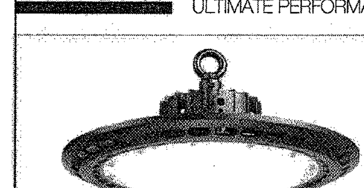

PRODUCT FEATURES

- Significant Energy Savings
- Maintenance Free
- Suitable for Wet Location
- Easy Install Twist and Lock Microwave Sensor
- Remote Control for Sensor
- Instant On/Off, No Restrike Delay
- 50,000 hours L70
- 5 Year Warranty

Dimensions

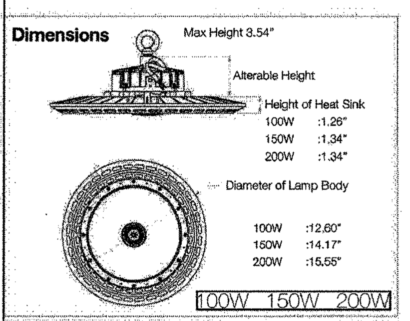

≤28000 Lumens

50,000 HRS lifetime · DAY LIGHT 5000K · 120° · DLC PREMIUM · CRI 80 · FC · WET LOCATIONS · UL LISTED · 5 Year Warranty

Additional accessories sold seperately

Model	AL-HB100C/50	AL-HB150C	AL-HB200C/50
Power	100W	150W	200W
Lumens	≤14000lm	≤21000lm	≤28000lm
Color Temperature	5000K	4000K & 5000K	5000K
Net Weight	6.17lbs	8.49lbs	9.26lbs
Input Voltage	100-277V AC	100-277V AC	100-277V AC
Power Factor	0.90	0.90	0.90
LED Type	SMD	SMD	SMD
CRI	>80	>80	>80
Location Information	Wet Location	Wet Location	Wet Location
Warranty	5 Years	5 Years	5 Years
Operating Temperature	-31°F~131°F	-31°F~131°F	-31°F~131°F
Beam Angle	120°	120°	120°
Frequency	50/60hz	50/60hz	50/60hz
Dimming Protocol	0-10V	0-10V	0-10V
Body Material	Die Cast Aluminum	Die Cast Aluminum	Die Cast Aluminum
Impact Resistance	IK08	IK08	IK08

© All Right Reserved ALL-LED USA LLC

www.all-ledusa.com
info@all-ledusa.com
+1 727 524 4270
+1 727 290 3914

LIGHT-D

Sure-Lites

DESCRIPTION

The LED APC series is UL924 code compliant solution for indoor exit and emergency requirements that will operate for a minimum of 90 minutes during a power outage. The LED emergency heads are adjustable, can be side or top mounted and will provide 17 feet of emergency egress coverage. The nickel cadmium battery requires no maintenance. The exit features an LED source available for red or green letters, is field configurable for single or double face and has field configurable chevrons. The polycarbonate housing is universal mount (ceiling, wall or end) and available in a white or black finish. The high powered remote capable versions (H series) will power two additional 3.6 volt emergency heads from the APWR series to generate a total of 34 feet of emergency egress coverage.

SPECIFICATION FEATURES

Electrical
- Dual Voltage Input 120/277VAC, 60Hz
- Line-latching
- Solid-State Voltage Limited Charger
- Solid-State Switching
- Brownout Protection
- Low Voltage Disconnect
- Overload/Short Circuit Protection
- Test Switch / Power Indicator Light
- High Power Combo available capable of running two additional LED remote heads
- 3.6V, .78W DC long Lasting LED Heads

Housing Construction
- All components are injection molded, color stable, high impact polycarbonate material
- Textured finish available in white or black
- Components are of snap-fit construction to facilitate under 5-minute installation
- Reinforcing ribs throughout to provide maximum strength
- Molded-in wireways facilitate internal wire routing and connections
- All components including battery and electronics are located inside the exit housing
- Snap-out or snap-in chevron directional indicators have full 3/4" stroke
- Universal exits can be field configured as single face or double face
- Snap-fit canopy with captive mounting screws included with all exits
- Exit can be ceiling, wall, or end mounted
- Universal J-box mounting pattern
- Operating temperature range 10 °C to 40 °C

Battery
- Sealed nickel cadmium
- Maintenance free, long life
- Full recharge time: 24 hrs (max.)

Code Compliance
- UL 924 Listed
- UL Damp Location Listed
- Life Safety NFPA 101
- NEC/OSHA
- Most State and Local Codes
- California Energy Code compliant

Lamp Data
- AC LED: Long life LED lamps provide uniform diffused illumination
- DC: LED DC lamps (Brighter in emergency mode)
- Heads DC: 3.6V, .78W Long Life LED Heads Light Output Equivalent to 5.4W Incandescent

Warranty
- Five-year warranty
- Seven-year prorated battery warranty

T20

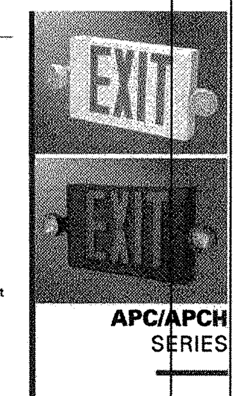

APC/APCH SERIES

POLYCARBONATE EXIT
AC ONLY SELF POWERED
EMERGENCY
LED LAMPS
EXIT LIGHTING

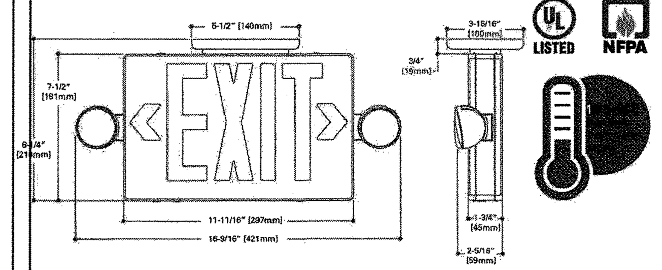

UL LISTED · NFPA

ENERGY DATA
Maximum power consumption under all charge conditions:

Sealed Nickel Cadmium Battery LED Exits - Red
Input Power: 120V = 1.31W, 277V = 1.68W
Input Current (Max.): 120V = .09A, 277V = .09A
Power Factor: 120V = >.12, 277V = >.07

Energy Data AC Only LED Exits - Red
Input Power: 120V = 2.34W, 277V = 1.62W
Input Current (Max.): 120V = .14A, 277V = .10A
Power Factor: 120V = >.14, 277V = >.06

LED Exits - Green
Input Power: 120V = 1.56W, 277V = 1.46W
Input Current (Max.): 120V = .09A, 277V = .09A
Power Factor: 120V = >.14, 277V = >.06

LED Exits - Green (AC Only)
Input Power: 120V = 2.8W, 277V = 2.1W
Input Current (Max.): 120V = .10A, 277V = .10A
Power Factor: 120V = >.20, 277V = >.07

ORDERING INFORMATION

SAMPLE NUMBER: APXH7R2

Series	Remote Heads Powered	Battery	Face Options	Letter Colors	Housing Color	Catalog Numbers
APC	_ = no remote heads	7 = nickel cadmium battery	_ = Universal	R = Red G = Green	_ = White BK = Black	APC7R, APC7RBK, APC7G, APC7GBK
	H = two 3.6V LED heads	7 = nickel cadmium battery	_ = Universal	R = Red G = Green	_ = White BK = Black	APCH7R, APCH7RBK, APCH7G, APCH7GBK

COOPER Lighting Solutions

TD505037EN 2017-10-3

LIGHT-E

4428
120V

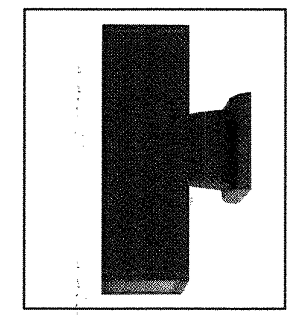

The Outdoor LED Cylinder Family features wet location rated wall mount style cylinders with down light and up & down light options. Choose from energy efficient 13W, 17W, or 27W AC modules, with finishes available in black, brushed nickel, or oil-rubbed bronze. Features Triac dimming down to 5%, using most standard dimmers. Utilizes AC circuit on board technology for cooler operating temperature and extended lifetime.

Construction
- Aluminum die-cast with powder coat finish

Electrical
- 120V Direct AC operation with DOB
- Triac dimming down to 5%
- Various wattages of modules available
- Cooler operating temperature without driver
- Operating temperature: -31ºF (-35ºC) to 122ºF (50ºC)
- Stable driving current prevents inrush damage to circuit switches and modules
- Available in 80CRI, 3000K & 4000K

Installation
- Easy surface mounting for simple installation using anchors and screws
- J-box mountable

Lens
- Clear acrylic lens protects LEDs while allowing for optimum lumen output
- 37° beam angle

Finish
- Black, brushed aluminum or oil-rubbed bronze

Certifications
- cCSAus for wet location
- 5 year limited warranty
- Wet location rated

TEL: 800.937.6925 | Fax: 800.207.9509 | www.rplighting.com

4428
120V

4" Square Up/Down

4428	11-13/16" x 4-1/4" x 6-3/4"	13W	845lm	1280lm	3K 3000K
		17W	1105lm	1710lm	4K 4000K
		27W	1755lm	2570lm	

Example: 4428BK-13-3K

4428

4428	BK : Black	-13 : 13W	-3K : 3000K
	BA : Brushed Aluminum	-17 : 17W	-4K : 4000K
	OB : Oil-rubbed Bronze	-27 : 27W	

TEL: 800.937.6925 | Fax: 800.207.9509 | www.rplighting.com

LIGHT-F

Project		Catalog #		Type	
Prepared by		Notes		Date	

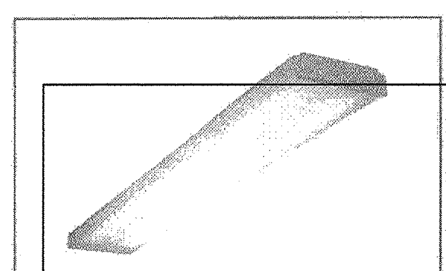

Metalux

WNLED

Utility LED Wraparound

Typical Applications
Commercial • Schools • Institutional • Retail • Residential

Interactive Menu
- Order Information page 2
- Photometric Data page 3
- Product Warranty

Product Certification

Product Features

Top Product Features
- 4 ft. and 2 ft. product configurations
- Frost lens offers best-in-class uniform illumination
- UNV (120V-277V) 0 to 10V dimmable driver
- Color Temperature (CCT): 3000K, 3500K, 4000K, 5000K
- Ideal for single or continuous row applications

Dimensional and Mounting Details

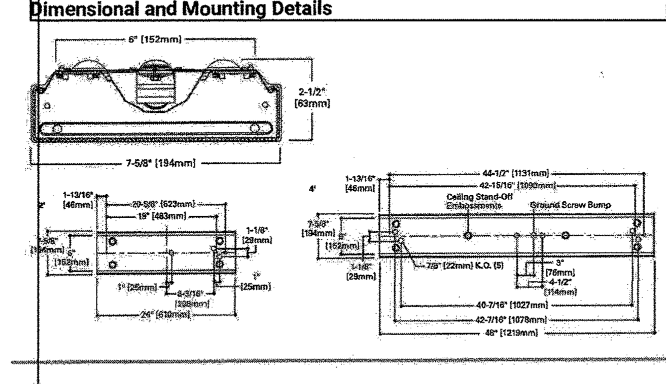

COOPER Lighting Solutions

PS519391EN page 1
March 9, 2020 11:10 AM

Metalux WNLED

Photometric Data

View IES files

4WNLED-LD4-32SL-F-UNV-L835-CD1-U
Electronic Driver
Linear LED 3500K
Spacing criterion: (II) 1.22 x mounting height, (⊥) 1.29 x mounting height
Lumens: 3682
Input Watts: 28.8W
Efficacy: 127.8 LPW
Test Report: 4WNLED-LD4-32SL-F-UNV-L835-CD1-U.IES

4WNLED-LD4-40SL-F-UNV-L835-CD1-U
Electronic Driver
Linear LED 3500K
Spacing criterion: (II) 1.22 x mounting height, (⊥) 1.29 x mounting height
Lumens: 4029
Input Watts: 32.2W
Efficacy: 125.1 LPW
Test Report: 4WNLED-L04-40SLF-UNV-L835-CD1-U.IES

Energy and Performance Data by Catalog

Lumen Type	Length	Catalog Number	Nominal 3500K Lumens	Watts	lm/W
Standard	2 ft.	2WNLED-LD4-28SL-F-UNV-L8XX-CD1-U	2861	24.2	118
Standard	4 ft.	4WNLED-LD4-32SL-F-UNV-L8XX-CD1-U	3682	28.8	128
Standard	4 ft.	4WNLED-LD4-40SL-F-UNV-L8XX-CD1-U	4029	32.2	125
Standard	4 ft.	4WNLED-LD4-50SL-F-UNV-L8XX-CD1-U	5064	42.4	118

CCT Table

Approximate Color Temperature	Multiplier
5000K	1.02
4000K	1.02
3500K	1.00
3000K	0.97

Shipping Data

Catalog No.	Wt.
2WNLED	5 lbs.
4WNLED	9 lbs.

COOPER Lighting Solutions

Cooper Lighting Solutions
1121 Highway 74 South
Peachtree City, GA 30269
P: 770-486-4800
www.cooperlighting.com

© 2020 Cooper Lighting Solutions
All Rights Reserved.

Specifications and dimensions subject to change without notice.

PS519391EN page 3
March 9, 2020 11:10 AM

Metalux WNLED

Order Information
SAMPLE ORDER NUMBER: 4WNLED-LD4-40SL-F-UNV-L840-CD1-U

Length	Series	Lamp Type	Lumen Output	Lens	Voltage	Emergency Options
2=2 ft. 4=4 ft.	WNLED=Utility LED Wraparound	LD4=LED	28SL=2800 (1) 32SL=3200 40SL=4000 50SL=5000	F=Frost Acrylic (standard)	347=347V (2) 480=480V (2) UNV=Universal Voltage 120-277	EL7W=7-watt, 120V-277V emergency battery pack installed (4,5) EL14W=14-watt 120V-277V emergency battery pack installed (4,6)
	Notes (3) DesignLights Consortium® Qualified and classified for DLC Standard, refer to www.designlights.org for details.		Notes (1) 2 ft. model.		Notes (2) 4 ft. model only.	Notes (4) With integral test switch/indicator/laser test. For approximate delivered lumens multiply the lumens per watt of the desired fixture by the wattage of the emergency battery pack (100 lm/W x 7=700 lumens). IES format photometry for luminaire under emergency operation available. (5) Emergency options not available for 2 ft. versions. (6) Emergency options use taller ballast cover that alters appearance.

CCT Options	Driver Type	Number of Drivers	Packaging
L830=3000K L835=3500K L840=4000K L850=5000K	CD=0-10V Dimming Driver (10%-100% Dimming)	1=1 Driver	U=Unit Pack

Accessories (order separately)
- SCF=Fixed Stem Set (Specify Length), (2 Per Fixture)
- SCS=Swivel Stem Set (Specify Length), (2 Per Fixture)
- SCA=Adjustable 48" Stem Set (2 Per Fixture)
- A1B/Spacer-U=Spacer 1-1/2" to 2-1/2" from ceiling (Use 2 Per Fixture)
- DS2A140WNLED224 PK=Replacement Lens for 2WNLED
- DS2A140WNLED248 PK=Replacement Lens for 4WNLED

Product Specifications

Construction
- Housing consists of die formed cold rolled steel
- Ends formed with the housing for strength and provisions for continuous row aligners.
- Steel end plates with 7/8" KO and light-seal embossment
- Driver cover can be removed without tools

Controls
- WNLED has a standard 0-10V continuous dimming driver. Works with most 0-10V control/dimmer.
- Combine with energy saving products like occupancy sensors, daylighting controls and lighting relay panels to maximize energy savings
- Dimming range is 10% to 100%; varies by control device

Electrical
- LED's available in 3000K, 3500K, 4000K and 5000K with a min. 80 CRI
- Projected life at 70% lumen maintenance is nearly 150,000 hours with TM21 rating up to L88 > 60,000 hours
- Electronic drivers are 0-10V dimming at 120-277V, 347V, and 480V applications

Emergency Battery Pack Option
- Optional 120V-277V integral emergency battery pack at 7 or 14-watts
- The 90-minute batteries provide constant power to the LED system, ensuring code compliance
- The patented EZ Key prevents accidental discharge of the battery during installation

Finish
- Multistage iron phosphate pretreatment ensures maximum bonding and rust inhibitor
- High reflective paint after fabrication, baked white enamel finish is standard

Channel/Wireway Cover
- Die formed heavy gauge steel
- Tight fit for ease of maintenance

Shielding
- Acrylic, high performance, frost blend
- Sides have internal linear prisms and bottom has pyramidal prisms for brightness control

Installation
- Fixture may be surface, pendant, or stem mounted.
- See accessories below for ordering information

Compliance
- Indoor luminaires are cULus listed for 25°C ambient environments, damp location listed, RoHS compliant, and LED modules comply with IESNA LM-79 and LM-80 standards
- DesignLights Consortium® Qualified and classified for DLC Standard, refer to www.designlights.org for details
- Suitable for use in clothes closets when installed in accordance with the NEC 410.16 spacing requirements
- Can be used for State of California Title 24 high efficacy luminaire

COOPER Lighting Solutions

PS519391EN page 2
March 9, 2020 11:10 AM

LIGHT-A

orbit
Orbit Industries, Inc.

Type: ______ Date: ______
Job Name: ______
Contractor: ______
Catalog No.: ______
Notes: ______

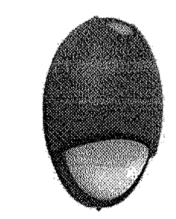

Catalog#: EL1DOL
DECORATIVE WET LOCATION LED EMERGENCY LIGHT

Category	Emergency Lights
Page	F5

Features:
- Universal Voltage 120-277VAC Operation
- UL Listed for Wet Location
- Suitable for cold weather with heater option (-10°C ~ 40°C)
- 12W, 5000K Energy Saving LED Lamp
- 1286 lumens standard and 350 lumens in Emergency mode
- 90 Minutes Minimum Emergency Operation
- Die Cast Aluminum Housing with Powder Coated Finish
- Universal Mounting Plate
- Threaded opening at top of enclosure for Conduit Mounting
- Suitable for wall and ceiling mounting
- Can be used as a Normal Light or an Emergency Light
- **Built-In Photocell**
- Self Diagnostic Testing Standard
- Push-to-Test Switch
- Maintenance-free 4.8V Rechargeable NiCd Battery
- Fully automatic operation

Line Drawings:

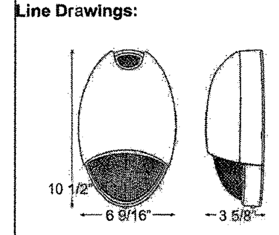

Certifications:

CAT. NO.	Housing Color	Option
EL1DOL	W (White) BR (Bronze) B (Black) N (Nickel)	HTR (Internal Heater)

LIGHT-B

PERFORMANCE ELECTRIC

2019CBC
City of Madera
Building Department
The approval of these plans does not prevent the City of Madera from requiring correction of errors or omissions in the plans, specifications or construction. Subject to field inspections and approvals. Laws, Codes and ordinances
APPROVED
By:
Date: MAR 0 3 2022
2019CBC 2019CBC

CONTRACTOR:

DBKO
DESIGN BUILD

8839 NORTH CEDAR #374
FRESNO, CA 93720
(559) 930-DBKO

WHSE PARTNERS

BY	BN
REVISION	
DATE	9/08/2021

ANY INFORMATION OR DATA ON THIS DRAWING IS NOT INTENDED TO BE SUITABLE FOR REUSE BY ANY PERSON, FIRM, CORPORATION, OR ANY OTHERS ON EXTENSIONS OF THIS PROJECT OR FOR ANY USE ON ANY OTHER PROJECT. ANY REUSE WITHOUT WRITTEN VERIFICATION AND ADAPTATION BY THE ENGINEER FOR THE SPECIFIC PURPOSE INTENDED WILL BE AT THE USER'S SOLE RISK AND WITHOUT LIABILITY OR LEGAL EXPOSURE TO THE ENGINEER.

SEAL

LEASE FLEX. / WAREHOUSE BUILDINGS
FOR
MADERA INDUSTRIAL WHSE, LLC.
S. SCHNOOR AVENUE
MADERA, CA 93637

JOB NUMBER	
DESIGNED BY	TD
DRAWN BY	BN
DATE	9/08/2021
SHEET NUMBER	E4

STATE OF CALIFORNIA
Electrical Power Distribution
NRCC-ELC-E

CALIFORNIA ENERGY COMMISSION

CERTIFICATE OF COMPLIANCE			NRCC-ELC-E
This document is used to demonstrate compliance with mandatory requirements in §130.5, for electrical systems in newly constructed nonresidential, high-rise residential and hotel/motel occupancies. Additions and alterations to electrical service systems in these occupancies will also use this document to demonstrate compliance per §141.0(a) or §141.0(b)2P for alterations..			
Project Name:	Madera Industrial WHSE	**Report Page:**	(Page 1 of 5)
Project Address:	S. Schnoor Avenue	**Date Prepared:**	9/17/2021

A. GENERAL INFORMATION

01 Project Location (city)		Madera		02 Occupancy Types Within Project:			
☒ Office	☐ Retail		☒ Warehouse	☐ Hotel/Motel	☐ School		☒ Support Areas
☐ Parking Garage	☐ High-Rise Residential		☐ Relocatable	☐ Healthcare Facilities	☐ Other (write in)		See Table I

B. PROJECT SCOPE

This table includes electrical systems that are within the scope of the permit application.

01	02	03	04	05
Electrical Service Designation/Description	Scope of Work[1]	Rating (kVA)	Utility Provided Metering System Exception to §130.5(a)[2]	System subject to CA Elec Code Article 517 Exception to §130.5(a)and (b)
Madera Industrial WHSE	New electrical service equipment and meter	158	☐	☐
06 Demand Response Controls	Where required, demand response controls must be specified which are capable of receiving and automatically responding to at least one standards based messaging protocol which enables demand response after receiving a demand response signal. Sections §120.2, §130.1 and §130.3 and compliance documents NRCC-MCH, NRCC-LTI and NRCC-LTS will indicate when demand response controls are required.			

[1] *FOOTNOTES: Adding only new feeders and branch circuits triggers Voltage Drop 130.5(c), no other requirements from 130.5 are required.*
[2] *Applicable if the utility company is providing a metering system that indicates instantaneous kW demand and kWh for a utility-defined period.*

C. COMPLIANCE RESULTS

Results in this table are automatically calculated from data input and calculations in Tables F through I. Note: If any cell on this table says "COMPLIES with Exceptional Conditions" refer to Table D. Exceptional Conditions for guidance or see applicable Table referenced below.

01		02		03		04	05
Service Electrical Metering §130.5(a) (See Table F)	AND	Separation for Monitoring §130.5(b) (See Table G)	AND	Voltage Drop §130.5(c) (See Table H)	AND	Controlled Receptacles §130.5(d) (See Table I)	
Yes	AND	Yes	AND	Yes	AND	Yes	COMPLIES

STATE OF CALIFORNIA
Electrical Power Distribution
NRCC-ELC-E

CALIFORNIA ENERGY COMMISSION

CERTIFICATE OF COMPLIANCE			NRCC-ELC-E
Project Name:	Madera Industrial WHSE	**Report Page:**	(Page 2 of 5)
Project Address:	S. Schnoor Avenue	**Date Prepared:**	9/17/2021

D. EXCEPTIONAL CONDITIONS

This table is auto-filled with uneditable comments because of selections made or data entered in tables throughout the form.

E. ADDITIONAL REMARKS

This table is includes remarks made by the permit applicant to the Authority Having Jurisdiction.

F. SERVICE ELECTRICAL METERING

This table includes new or replacement electrical service systems OR equipment to demonstrate compliance with §130.5(a)

01	02	03				04	05	
		Required Metering Capabilities per Table 130.5-A					Field Inspector	
Electrical Service Designation/Description	Rating (kVA)	Instantaneous Demand (kW)	Historical Peak Demand (kW)	Tracking kWh for user-defined period	kWh per rate period	Location of Requirements in Construction Documents	Pass	Fail
Madera Industrial WHSE	158	☐	☒	☒	☐	Electrical Sheets	☐	☐

G. SEPARATION OF ELECTRICAL CIRCUITS FOR ENERGY MONITORING

This table includes entirely new or complete replacement electrical power distribution systems to demonstrate compliance with §130.5(b). Any load types that are not included in the service do not need to be shown.

01	02	03	04	05	
				Field Inspector	
Load Type per Table 130.5-B[1]	Minimum Required Separation of Load per Table 130.5-B	Compliance Method[2]	Location of Requirements in Construction Documents	Pass	Fail
Madera Industrial WHSE					

* *NOTES: If "Other*" is selected under Compliance Method above, please indicate how compliance has been achieved in the space provided below.*

[1] *FOOTNOTES: For each separate load type, up to 10% of the connected load may be of any type.*
[2] *Method 1: Switchboards/ motor control centers/ panelboard loads disaggregated for each load type.*
Method 2: Switchboards/ motor control centers/ panelboard supply other distribution equipment with loads disaggregated for each load type.
Method 3: Branch circuits serve load types individually and provisions for adding future branch circuit monitoring.
Method 4: Complete metering system measures and reports loads by type.
See Chapter 8 of the Nonresidential Compliance Manual for more detail on Compliance Methods.

STATE OF CALIFORNIA
Electrical Power Distribution
NRCC-ELC-E

CALIFORNIA ENERGY COMMISSION

CERTIFICATE OF COMPLIANCE			NRCC-ELC-E
Project Name:	Madera Industrial WHSE	**Report Page:**	(Page 3 of 5)
Project Address:	S. Schnoor Avenue	**Date Prepared:**	9/17/2021

H. VOLTAGE DROP

This table includes entirely new or complete replacement electrical power distribution systems, or alterations that add, modify or replace both feeders and branch circuits to demonstrate compliance with §130.5(c). For alterations, only the altered circuits must demonstrate compliance per §141.0(b)2Piii

01	02		03	04	05	
Electrical Service Designation/Description	Combined Voltage Drop on Installed Feeder/Branch Circuit Conductors Compliance Method		Location of Voltage Drop Calculations[1]	Sheet Number for Voltage Drop Calculations in Construction Documents	Field Inspector Pass	Field Inspector Fail
Madera Industrial WHSE	☒ Voltage drop less than 5%	☐ Permitted by CA Elec Code (Exception to 130.5(c))*	Attached		☐	☐

* *NOTES: If "Permitted by CA Elec Code *" is selected under Compliance Method above, please indicate where the exception applies in the space provided below.*

[1] *FOOTNOTES: Voltage drop calculations may be attached to the permit application outside the construction documents if allowed by the Authority Having Jurisdiction. Select "attached" if applicable. If calculations will be the responsibility of the installing contractor, select "Contractor Responsible".*

I.CIRCUIT CONTROLS FOR 120-VOLT RECEPTACLES AND CONTROLLED RECEPTACLES

This table includes entirely new or complete replacement electrical power distribution systems to demonstrate compliance with §130.5(d). Both controlled and uncontrolled receptacles must be provided in office areas, lobbies, conference rooms, kitchen areas in office spaces, copy rooms and hotel/motel guest rooms.

01	02	03	04	05	06	
Room name or Description	Location/ Type of Controlled Receptacles	Shut-Off Controls	Permanent Durable Marking Will be Used	Location of Requirements in Construction Documents	Field Inspector Pass	Field Inspector Fail

* *NOTES: If "Other*" is selected under Shut-Off Controls above, please indicate how compliance has been achieved in the space provided below.*

J. DECLARATION OF REQUIRED CERTIFICATES OF INSTALLATION

Selections have been made based on information provided in this document. If any selection have been changed by permit applicant, an explanation should be included in Table E. Additional Remarks. These documents must be provided to the building inspector during construction and can be found online at https://www.energy.ca.gov/title24/2019standards/2019_compliance_documents/Nonresidential_Documents/NRCI/

Yes	No	Form/Title	Field Inspector Pass	Field Inspector Fail
●	○	NRCI-ELC-01-E - Must be submitted for all buildings	☐	☐

STATE OF CALIFORNIA
Electrical Power Distribution
NRCC-ELC-E

CALIFORNIA ENERGY COMMISSION

CERTIFICATE OF COMPLIANCE			NRCC-ELC-E
Project Name:	Madera Industrial WHSE	**Report Page:**	(Page 4 of 5)
Project Address:	S. Schnoor Avenue	**Date Prepared:**	9/17/2021

K. DECLARATION OF REQUIRED CERTIFICATES OF ACCEPTANCE

There are no Certificates of Acceptance applicable to electrical power distribution requirements.

STATE OF CALIFORNIA
Electrical Power Distribution
NRCC-ELC-E

CALIFORNIA ENERGY COMMISSION

CERTIFICATE OF COMPLIANCE			NRCC-ELC-E
Project Name:	Madera Industrial WHSE	**Report Page:**	(Page 5 of 5)
Project Address:	S. Schnoor Avenue	**Date Prepared:**	9/17/2021

DOCUMENTATION AUTHOR'S DECLARATION STATEMENT

I certify that this Certificate of Compliance documentation is accurate and complete.

Documentation Author Name: Daniel Field	Documentation Author Signature: *Daniel Field*
Company: GMA Consulting Engineers & Architects, Inc.	Signature Date: 9/17/21
Address: 7337 N. First St. Suite #110	CEA/ HERS Certification Identification (if applicable):
City/State/Zip: Fresno California 93720	Phone: (559) 435-1411

RESPONSIBLE PERSON'S DECLARATION STATEMENT

I certify the following under penalty of perjury, under the laws of the State of California:

1. The information provided on this Certificate of Compliance is true and correct.
2. I am eligible under Division 3 of the Business and Professions Code to accept responsibility for the building design or system design identified on this Certificate of Compliance (responsible designer)
3. The energy features and performance specifications, materials, components, and manufactured devices for the building design or system design identified on this Certificate of Compliance conform to the requirements of Title 24, Part 1 and Part 6 of the California Code of Regulations.
4. The building design features or system design features identified on this Certificate of Compliance are consistent with the information provided on other applicable compliance documents, worksheets, calculations, plans and specifications submitted to the enforcement agency for approval with this building permit application.
5. I will ensure that a completed signed copy of this Certificate of Compliance shall be made available with the building permit(s) issued for the building, and made available to the enforcement agency for all applicable inspections. I understand that a completed signed copy of this Certificate of Compliance is required to be included with the documentation the builder provides to the building owner at occupancy.

Responsible Designer Name: Tom Dukes	Responsible Designer Signature:
Company: Performance Electric	Date Signed: 2021-09-17
Address:	License:
City/State/Zip:	Phone: (559) 631-1000

STATE OF CALIFORNIA
Indoor Lighting
NRCC-LTI-E

CALIFORNIA ENERGY COMMISSION

CERTIFICATE OF COMPLIANCE			NRCC-LTI-E
This document is used to demonstrate compliance with requirements in §110.9, §110.12(c), §130.0, §130.1, §140.6 and §141.0(b)2 for indoor lighting scopes using the prescriptive path.			
Project Name:	Madera Industrial WHSE	**Report Page:**	(Page 1 of 7)
Project Address:	S. Schnoor Avenue	**Date Prepared:**	9/17/2021

A. GENERAL INFORMATION

01 Project Location (city)	Madera		04 Total Conditioned Floor Area (ft²)	0		
02 Climate Zone	13		05 Total Unconditioned Floor Area (ft²)	136,100.8		
03 Occupancy Types Within Project (select all that apply):			06 # of Stories (Habitable Above Grade)	1		
☐ Office	☐ Retail	☐ Warehouse	☐ Hotel/Motel	☐ School		☐ Support Areas
☐ Parking Garage	☐ High-Rise Residential	☐ Relocatable	☐ Healthcare	☒ Other (Write in)		Assembly

B. PROJECT SCOPE

This table includes any lighting systems that are within the scope of the permit application and are demonstrating compliance using the prescriptive path outlined in §140.6 or §141.0(b)2 for alterations.

Scope of Work	Conditioned Spaces		Unconditioned Spaces	
01	02	03	04	05
My Project Consists of (check all that apply):	Calculation Method	Area (ft²)	Calculation Method	Area (ft²)
☒ New Lighting System	Complete Building Method	0	Complete Building Method	136100.8
☐ New Lighting System - Parking Garage				
Total Area of Work (ft²)		0		136100.8

STATE OF CALIFORNIA
Indoor Lighting
NRCC-LTI-E

CALIFORNIA ENERGY COMMISSION

CERTIFICATE OF COMPLIANCE			NRCC-LTI-E
Project Name:	Madera Industrial WHSE	**Report Page:**	(Page 2 of 7)
Project Address:	S. Schnoor Avenue	**Date Prepared:**	9/17/2021

C. COMPLIANCE RESULTS

If any cell on this table says "DOES NOT COMPLY" or "COMPLIES with Exceptional Conditions" refer to Table D. for guidance.

Lighting in conditioned and unconditioned spaces must not be combined for compliance per §140.6(b)1	Allowed Lighting Power per §140.6(b) (Watts)							Adjusted Lighting Power per §140.6(a) (Watts)				Compliance Results
	01	02	03	04		05		06	07		08	09
	Complete Building §140.6(c)1	Area Category §140.6(c)2	Area Category Additional §140.6(c)2G (+)	Tailored §140.6(c)3 (+)	=	Total Allowed (Watts)	≥	Total Designed (Watts)	Adjustments PAF Lighting Control Credits §140.6(a)2 (-)	=	Total Adjusted (Watts) *Includes Adjustments	05 must be >= 08 §140.6
	(See Table I)	(See Table I)	(See Table J)	(See Table K)				(See Table F)	(See Table P)			
Conditioned					=		≥			=		
Unconditioned	95,271				=	95,271	≥	32,588.8	0	=	32588.8	COMPLIES
Controls Compliance (See Table H for Details)												COMPLIES
Rated Power Reduction Compliance (See Table Q for Details)												

D. EXCEPTIONAL CONDITIONS

This table is auto-filled with uneditable comments because of selections made or data entered in tables throughout the form.

E. ADDITIONAL REMARKS

This table includes remarks made by the permit applicant to the Authority Having Jurisdiction.

F. INDOOR LIGHTING FIXTURE SCHEDULE

This table includes all permanent designed lighting and all portable lighting in offices.

Designed Wattage: Unconditioned Spaces

01	02	03	04	05	06	07	08	09	10	
Name or Item Tag	Complete Luminaire Description	Modular (Track) Fixture	Small Aperture & Color Change[1]	Watts per luminaire[2]	How is Wattage determined	Total Number of Luminaires	Excluded per §140.6(a)3	Design Watts	Field Inspector Pass	Field Inspector Fail
A	Metalix wnled utility led wraparound	No	No	28.8	CEC Default	76	No	2,188.8	☐	☐

STATE OF CALIFORNIA
Indoor Lighting
NRCC-LTI-E

CALIFORNIA ENERGY COMMISSION

CERTIFICATE OF COMPLIANCE			NRCC-LTI-E
Project Name:	Madera Industrial WHSE	**Report Page:**	(Page 3 of 7)
Project Address:	S. Schnoor Avenue	**Date Prepared:**	9/17/2021

F. INDOOR LIGHTING FIXTURE SCHEDULE

D	Ulti-Bay AL-HB***/50	No	No	200	CEC Default	152	No	30,400	☐	☐
Total Designed Watts: UNCONDITIONED SPACES								32,588.8		

[1] *FOOTNOTE: Design Watts for small aperture and color changing luminaires which qualify per §140.6(a)4B is adjusted to be 75% of their rated wattage. Table F automatically makes this adjustment, the permit applicant should enter full rated wattage in column 05.*

[2] *Authority Having Jurisdiction may ask for Luminaire cut sheets to confirm wattage used for compliance per §130.0(c). Wattage used must be the maximum rated for the luminaire, not the lamp.*

G. MODULAR LIGHTING SYSTEMS

This section does not apply to this project.

H. INDOOR LIGHTING CONTROLS (Not including PAFs)

*This table includes lighting controls for conditioned and unconditioned spaces. When a control having a * is shown, the notes section of this table provides more detail on how compliance is achieved. The lighting controls section of the Compliance Summary Table on the first page will show "DOES NOT COMPLY" if the notes are left blank.*

Building Level Controls

01	02	03	
Mandatory Demand Response §110.12(c)	Shut-off controls §130.1(c)	Field Inspector Pass	Field Inspector Fail
Required > 10,000 SF	Whole Building Auto Time Switch	☐	☐

Area Level Controls

04	05	06	07	08	09	10	11	12	
Area Description	Complete Building or Area Category Primary Function Area	Area Controls §130.1(a)	Multi-Level Controls §130.1(b)	Shut-Off Controls §130.1(c)	Primary/Sky lit Daylighting §130.1(d)	Secondary Daylighting §140.6(d)	Interlocked Systems §140.6(a)1	Field Inspector Pass	Field Inspector Fail

*NOTES: Controls with a * require a note in the space below explaining how compliance is achieved.	13
EX: Conference 1: Primary/Skylight Daylighting: Exempt because less than 120 watts of general lighting; EXCEPTION 1 to §130.1(d)2	Plan Sheet Showing Daylit Zones:

STATE OF CALIFORNIA
Indoor Lighting
NRCC-LTI-E

CALIFORNIA ENERGY COMMISSION

CERTIFICATE OF COMPLIANCE			NRCC-LTI-E
Project Name:	Madera Industrial WHSE	**Report Page:**	(Page 4 of 7)
Project Address:	S. Schnoor Avenue	**Date Prepared:**	9/17/2021

I. LIGHTING POWER ALLOWANCE: COMPLETE BUILDING OR AREA CATEGORY METHODS

Each area complying using the Complete Building or Area Category Methods per §140.6(b) are included in this table. Column 06 indicates if additional lighting power allowances per §140.6(c) or adjustments per §140.6(a) are being used .

Unconditioned Spaces

01	02	03	04	05	06	
Area Description	Complete Building or Area Category Primary Function Area	Allowed Density (W/ft²)	Area (ft²)	Allowed Wattage (Watts)	Additional Allowance / Adjustment Area Category	Additional Allowance / Adjustment PAF
Whole Building	Assembly Building	0.7	136,100.8	95,270.6	No	No
		TOTALS:	136,100.8	95,270.6	See Tables J, or P for detail	

J. ADDITIONAL ALLOWANCE: AREA CATEGORY METHOD QUALIFYING LIGHTING SYSTEM

This section does not apply to this project.

K. TAILORED METHOD GENERAL LIGHTING POWER ALLOWANCE

This section does not apply to this project.

L. ADDITIONAL LIGHTING ALLOWANCE: TAILORED WALL DISPLAY

This section does not apply to this project.

M. ADDITIONAL LIGHTING ALLOWANCE: TAILORED FLOOR AND TASK LIGHTING

This section does not apply to this project.

N. ADDITIONAL LIGHTING ALLOWANCE: TAILORED ORNAMENTAL/SPECIAL EFFECTS

This section does not apply to this project.

O. ADDITIONAL LIGHTING ALLOWANCE: TAILORED VERY VALUABLE MERCHANDISE

This section does not apply to this project.

P. POWER ADJUSTMENT: LIGHTING CONTROL CREDIT (POWER ADJUSTMENT FACTOR (PAF))

This section does not apply to this project.

STATE OF CALIFORNIA
Indoor Lighting
NRCC-LTI-E

CALIFORNIA ENERGY COMMISSION

CERTIFICATE OF COMPLIANCE			NRCC-LTI-E
Project Name:	Madera Industrial WHSE	**Report Page:**	(Page 5 of 7)
Project Address:	S. Schnoor Avenue	**Date Prepared:**	9/17/2021

Q. RATED POWER REDUCTION COMPLIANCE FOR ALTERATIONS

This section does not apply to this project.

R. 80% LIGHTING POWER FOR ALL ALTERATIONS - CONTROLS EXCEPTIONS

This section does not apply to this project.

S. DAYLIGHT DESIGN POWER ADJUSTMENT FACTOR (PAF)

This section does not apply to this project.

T. DECLARATION OF REQUIRED CERTIFICATES OF INSTALLATION

Selections have been made based on information provided in this document. If any selection have been changed by permit applicant, an explanation should be included in Table E. Additional Remarks. These documents must be provided to the building inspector during construction and can be found online at https://www.energy.ca.gov/title24/2019standards/2019_compliance_documents/Nonresidential_Documents/NRCI/

Yes	No	Form/Title	Field Inspector Pass	Field Inspector Fail
●	○	NRCI-LTI-01-E - Must be submitted for all buildings	☐	☐
○	●	NRCI-LTI-02-E- Must be submitted for a lighting control system, or for an Energy Management Control System (EMCS), to be recognized for compliance.	☐	☐
○	●	NRCI-LTI-04-E - Must be submitted for two interlocked systems serving an auditorium, a convention center, a conference room, a multipurpose room or a theater to be recognized for compliance.	☐	☐
○	●	NRCI-LTI-05-E- Must be submitted for a Power Adjustment Factor (PAF) to be recognized for compliance.	☐	☐
○	●	NRCI-LTI-06-E- Must be submitted for additional wattage installed in a video conferencing studio to be recognized for compliance.	☐	☐

STATE OF CALIFORNIA
Indoor Lighting
NRCC-LTI-E

CALIFORNIA ENERGY COMMISSION

CERTIFICATE OF COMPLIANCE			NRCC-LTI-E
Project Name:	Madera Industrial WHSE	**Report Page:**	(Page 6 of 7)
Project Address:	S. Schnoor Avenue	**Date Prepared:**	9/17/2021

U. DECLARATION OF REQUIRED CERTIFICATES OF ACCEPTANCE

Selections have been made based on information provided in this document. If any selection have been changed by the permit applicant, an explanation should be included in Table E. Additional Remarks. These documents must be provided to the building inspector during construction and any with "-A" in the form name must be completed through an Acceptance Test Technician Certification Provider (ATTCP). For more information visit: http://www.energy.ca.gov/title24/attcp/providers.html

Yes	No	Form/Title	Field Inspector Pass	Field Inspector Fail
●	○	NRCA-LTI-02-A - Must be submitted for occupancy sensors and automatic time switch controls.	☐	☐
○	●	NRCA-LTI-03-A - Must be submitted for automatic daylight controls.	☐	☐
●	○	NRCA-LTI-04-A - Must be submitted for demand responsive lighting controls.	☐	☐
○	●	NRCA-LTI-05-A. - Must be submitted for institutional tuning power adjustment factor (PAF)	☐	☐

STATE OF CALIFORNIA
Indoor Lighting
NRCC-LTI-E

CALIFORNIA ENERGY COMMISSION

CERTIFICATE OF COMPLIANCE			NRCC-LTI-E
Project Name:	Madera Industrial WHSE	**Report Page:**	(Page 7 of 7)
Project Address:	S. Schnoor Avenue	**Date Prepared:**	9/17/2021

DOCUMENTATION AUTHOR'S DECLARATION STATEMENT

I certify that this Certificate of Compliance documentation is accurate and complete.

Documentation Author Name: Daniel Field	Documentation Author Signature: *Daniel Field*
Company: GMA Consulting Engineers & Architects, Inc.	Signature Date: 9/17/21
Address: 7337 N. First St. Suite #110	CEA/ HERS Certification Identification (if applicable):
City/State/Zip: Fresno California 93720	Phone: (559) 435-1411

RESPONSIBLE PERSON'S DECLARATION STATEMENT

I certify the following under penalty of perjury, under the laws of the State of California:

1. The information provided on this Certificate of Compliance is true and correct.
2. I am eligible under Division 3 of the Business and Professions Code to accept responsibility for the building design or system design identified on this Certificate of Compliance (responsible designer)
3. The energy features and performance specifications, materials, components, and manufactured devices for the building design or system design identified on this Certificate of Compliance conform to the requirements of Title 24, Part 1 and Part 6 of the California Code of Regulations.
4. The building design features or system design features identified on this Certificate of Compliance are consistent with the information provided on other applicable compliance documents, worksheets, calculations, plans and specifications submitted to the enforcement agency for approval with this building permit application.
5. I will ensure that a completed signed copy of this Certificate of Compliance shall be made available with the building permit(s) issued for the building, and made available to the enforcement agency for all applicable inspections. I understand that a completed signed copy of this Certificate of Compliance is required to be included with the documentation the builder provides to the building owner at occupancy.

Responsible Designer Name: Tom Dukes	Responsible Designer Signature:
Company: Performance Electric	Date Signed: 2021-09-17
Address:	License:
City/State/Zip:	Phone: (559) 631-1000

2019CBC
City of Madera
Building Department
The approval of these plans does not prevent the City of Madera from requiring correction of errors or omissions in the plans, specifications of construction. Subject to field inspections and approvals Laws, Codes and Ordinances
APPROVED
By:
Date: MAR 03 2022
2019CBC 2019CBC

BY	REVISION	DATE

ANY INFORMATION OR DATA ON THIS DRAWING IS NOT INTENDED TO BE SUITABLE FOR REUSE BY ANY PERSON, FIRM, CORPORATION, OR ANY OTHERS ON EXTENSIONS OF THIS PROJECT OR FOR ANY USE ON ANY OTHER PROJECT. ANY REUSE WITHOUT WRITTEN VERIFICATION AND ADAPTATION BY THE ENGINEER FOR THE SPECIFIC PURPOSE INTENDED WILL BE AT THE USER'S SOLE RISK AND WITHOUT LIABILITY OR LEGAL EXPOSURE TO THE ENGINEER.

SEAL

TYPICAL MECHANICAL FLOOR PLAN
LEASE FLEX. / WAREHOUSE BUILDINGS
FOR
MADERA INDUSTRIAL WHSE, LLC
S. SCHNOOR AVENUE, MADERA, CA

JOB NUMBER	21107
DESIGNED BY	
DRAWN BY	
DATE	9/09/2021
SHEET NUMBER	E5

STATE OF CALIFORNIA
Outdoor Lighting
NRCC-LTO-E — CALIFORNIA ENERGY COMMISSION

CERTIFICATE OF COMPLIANCE			NRCC-LTO-E
Project Name:	Madera Industrial WHSE	**Report Page:**	**(Page 1 of 7)**
Project Address:	S. Schnoor Avenue	**Date Prepared:**	9/17/2021

A. GENERAL INFORMATION

01	Project Location (city)	Madera	04	Total Illuminated Hardscape Area (ft^2)	80000
02	Climate Zone	13			
03	Outdoor Lighting Zone per Title 24 Part 1 §10.114 or as designated by Authority Having Jurisdiction (AHJ):				
☐	LZ-0: Very Low - Undeveloped Parkland	☐ LZ-2: Moderate - Rural Areas	☐	LZ-4: High - Must be reviewed by CA Energy Commission for Approval	
☐	LZ-1: Low - Developed Parkland	☒ LZ-3: Moderately High - Urban Areas			

B. PROJECT SCOPE

This table includes outdoor lighting systems that are within the scope of the permit application and are demonstrating compliance using the prescriptive path outlined in §140.7 or §141.0(b)2L for alterations.

My Project Consists of:

01	02	
☒ New Lighting System	Must Comply with Allowances from §140.7	
☐ Altered Lighting System	Is your alteration increasing the connected lighting load (Watts)?	○ Yes ○ No
03	**04**	**05**
% of Existing Luminaires Being Altered[1]	Sum Total of Luminaires Being Added or Altered	Calculation Method
☐ < 10% ☐ >= 10% and < 50% ☐ >= 50%		

Please proceed to Table F. Outdoor Lighting Fixture Schedule to define the project's luminaires.

[1] *FOOTNOTES: % of Existing Luminaires Being Altered = (Sum Total of Luminaires Being Added or Altered / Existing Luminaires within the Scope of the Permit Application) x 100.*

STATE OF CALIFORNIA
Outdoor Lighting
NRCC-LTO-E — CALIFORNIA ENERGY COMMISSION

CERTIFICATE OF COMPLIANCE			NRCC-LTO-E
Project Name:	Madera Industrial WHSE	**Report Page:**	**(Page 2 of 7)**
Project Address:	S. Schnoor Avenue	**Date Prepared:**	9/17/2021

C. COMPLIANCE RESULTS

Results in this table are automatically calculated from data input and calculations in Tables F through I. Note: If any cell on this table says "COMPLIES with Exceptional Conditions" refer to Table D. Exceptional Conditions for guidance or see applicable Table referenced below.

01		02		03		04		05		06		07		08	09
Calculations of Total Allowed Lighting Power (Watts) §140.7 or §141.0(b)2L												Compliance Results			
General Hardscape Allowance §140.7(d)1 (See Table I)	+	Per Application §140.7(d)2 (See Table J)	+	Sales Frontage §140.7(d)2 (See Table K)	+	Ornamental §140.7(d)2 (See Table L)	+	Per Specific Area §140.7(d)2 (See Table M)	OR	Existing Power Allowance §141.0(b)2L (See Table N)	=	**Total Allowed** (Watts)	≥	**Total Actual** (Watts)	**07 must be >= 08**
4,245	+	---	+	---	+	---	+	---	OR	---	=	4,245	≥	3,256	COMPLIES
Cutoff Compliance (See Table G for Details)												N/A			
Controls Compliance (See Table H for Details)												COMPLIES			

D. EXCEPTIONAL CONDITIONS

This table is auto-filled with uneditable comments because of selections made or data entered in tables throughout the form.

E. ADDITIONAL REMARKS

This table includes remarks made by the permit applicant to the Authority Having Jurisdiction.

STATE OF CALIFORNIA
Outdoor Lighting
NRCC-LTO-E — CALIFORNIA ENERGY COMMISSION

CERTIFICATE OF COMPLIANCE			NRCC-LTO-E
Project Name:	Madera Industrial WHSE	**Report Page:**	**(Page 3 of 7)**
Project Address:	S. Schnoor Avenue	**Date Prepared:**	9/17/2021

F. OUTDOOR LIGHTING FIXTURE SCHEDULE

For new or altered lighting systems demonstrating compliance with §140.7 all new luminaires being installed and any existing luminaires remaining or being moved within the spaces covered by the permit application are included in the Table below. For altered lighting systems using the Existing Power method per §141.0(b)2L only new luminaires being installed and replacement luminaires being installed as part of the project scope are included (ie, existing luminaires remaining or existing luminaires being moved are not included).

Designed Wattage:

01	02		03	04	05	06	07	08	09	10	
Name or Item Tag	Complete Luminaire Description		Watts per luminaire[1, 2]	How is Wattage determined	Total number luminaires[2]	Luminaire Status[3]	Excluded per §140.7(a)	Design Watts	Cutoff Req. > 6,200 initial lumen output §130.2(b)[4]	Field Inspector Pass	Fail
C	Sylvania Non Cutoff Wall Pack	☐ Linear	30	CEC Default	104	New	☐	3,120	NA: < 6200 lumens	☐	☐
	Architectural Square Cylinder up & Downlight	☐ Linear	17	CEC Default	8	New	☐	136	NA: < 6200 lumens	☐	☐
							Total Design Watts:	3256			

* NOTES: Selections with a * require a note in the space below explaining how compliance is achieved.
EX: Luminaire is lighting a statue; EXCEPTION 2 to §130.2(b)

[1] *FOOTNOTES: Authority Having Jurisdiction may ask for Luminaire cut sheets to confirm wattage used for compliance per §130.0(c)*
[2] *For linear luminaires, wattage should be indicated as W/lf instead of Watts/luminaire. Total linear feet should be indicated in column 05 instead of number of luminaires.*
[3] *Select "New" for new luminaires in a new outdoor lighting project, or for added luminaires in an alteration. Select "Altered" for replacement luminaires in an alteration. Select "Existing to Remain" for existing luminaires within the project scope that are not being altered and are remaining. Select "Existing Reinstalled" for existing luminaires which are being removed and reinstalled as part of the project scope.*
[4] *Compliance with mandatory cutoff requirements is required for luminaires with initial lumen output >= 6,200 unless exempted by §130.2(b)*

G. CUTOFF REQUIREMENTS (BUG)

This section does not apply to this project.

STATE OF CALIFORNIA
Outdoor Lighting
NRCC-LTO-E — CALIFORNIA ENERGY COMMISSION

CERTIFICATE OF COMPLIANCE			NRCC-LTO-E
Project Name:	Madera Industrial WHSE	**Report Page:**	**(Page 4 of 7)**
Project Address:	S. Schnoor Avenue	**Date Prepared:**	9/17/2021

H. OUTDOOR LIGHTING CONTROLS

This table demonstrates compliance with controls requirements for all new or altered luminaires installed as part of the permit application. For alteration projects, luminaires which are existing to remain (ie untouched) and luminaires which are removed and reinstalled (wiring only) do not need to be included in this table even if they are within the spaces covered by the permit application.
*When an option having a * is selected, the notes section of this table must be completed. The lighting controls section of the Compliance Summary Table on the first page will show "DOES NOT COMPLY" if the notes are left blank.*

Mandatory Controls

01	02	03	04	05	
Area Description	Shut-Off §130.2(c)1	Auto-Schedule §130.2(c)2	Motion Sensor §130.2(c)3	Field Inspector Pass	Fail

* NOTES: Controls with a * require a note in the space below explaining how compliance is achieved.
EX: Not permitted by health & safety to be turned off; EXCEPTION 1 to §130.2(c)

STATE OF CALIFORNIA
Outdoor Lighting
NRCC-LTO-E — CALIFORNIA ENERGY COMMISSION

CERTIFICATE OF COMPLIANCE			NRCC-LTO-E
Project Name:	Madera Industrial WHSE	**Report Page:**	**(Page 5 of 7)**
Project Address:	S. Schnoor Avenue	**Date Prepared:**	9/17/2021

I. LIGHTING POWER ALLOWANCE (per §140.7)

This table includes areas using allowance calculations per §140.7. General Hardscape Allowance is per Table 140.7-A while "Use it or lose it" Allowances are per Table 140.7-B. Indicate which allowances are being used to expand sections for user input. Luminaires that qualify for one of the "Use it or lose it" allowances shall not qualify for another "Use it or lose it" allowance.

01				
☒ General Hardscape Allowance Table I (below)	"Use it or lose it" Allowance (select all that apply) (select all that apply)			
	☐ Per Application Table J	☐ Sales Frontage Table K	☐ Ornamental Table L	☐ Per Specific Area Table M

Calculated General Hardscape Lighting Power Allowance per Table 140.7-A (LZ 0, 1 & 4)
This section does not apply to this project.
Calculated General Hardscape Lighting Power Allowance per Table 140.7-A (LZ 2 & 3)

02	03	04	05	06	07	08	9	10
		Area Wattage Allowance (AWA)			Area Wattage Allowance (AWA)			
Area Description	Surface Type	Illuminated Area (ft^2)	Allowed Density (W/ft^2)	Area Allowance (Watts)	Perimeter Length (lf)	Allowed Density (W/lf)	Linear Allowance (Watts)	Total General AWA + LWA (Watts)
Exterior Lighting	Asphalt	60000	0.03	1500	5080	0.4	1270	2770
Exterior Light	Asphalt	20000	0.03	500	2500	0.4	625	1125
Initial Wattage Allowance for Entire Site (Watts):								350
Total General Hardscape Allowance (Watts):								4245

J. LIGHTING ALLOWANCE: PER APPLICATION

This section does not apply to this project.

K. LIGHTING ALLOWANCE: SALES FRONTAGE

This section does not apply to this project.

L. LIGHTING ALLOWANCE: ORNAMENTAL

This section does not apply to this project.

M. LIGHTING ALLOWANCE: PER SPECIFIC AREA

This section does not apply to this project.

STATE OF CALIFORNIA
Outdoor Lighting
NRCC-LTO-E — CALIFORNIA ENERGY COMMISSION

CERTIFICATE OF COMPLIANCE			NRCC-LTO-E
Project Name:	Madera Industrial WHSE	**Report Page:**	**(Page 6 of 7)**
Project Address:	S. Schnoor Avenue	**Date Prepared:**	9/17/2021

N. EXISTING CONDITIONS POWER ALLOWANCE (alterations only)

This section does not apply to this project.

O. DECLARATION OF REQUIRED CERTIFICATES OF INSTALLATION

Selections have been made based on information provided in this document. If any selection have been changed by permit applicant, an explanation should be included in Table E. Additional Remarks. These documents must be provided to the building inspector during construction and can be found online at https://www.energy.ca.gov/title24/2019standards/2019_compliance_documents/Nonresidential_Documents/NRCI/

Yes	No	Form/Title	Field Inspector Pass	Fail
●	○	NRCI-LTO-01-E - Must be submitted for all buildings	☐	☐
○	●	NRCI-LTO-02-E- Must be submitted for a lighting control system, or for an Energy Management Control System (EMCS), to be recognized for compliance.	☐	☐

P. DECLARATION OF REQUIRED CERTIFICATES OF ACCEPTANCE

Selections have been made based on information provided in this document. If any selection have been changed by permit applicant, an explanation should be included in Table E. Additional Remarks. These documents must be provided to the building inspector during construction and must be completed through an Acceptance Test Technician Certification Provider (ATTCP). For more information visit: http://www.energy.ca.gov/title24/attcp/providers.html

Yes	No	Form/Title	Field Inspector Pass	Fail
○	●	NRCA-LTO-02-A - Must be submitted for all outdoor lighting controls except for alterations where controls are added to <= 20 luminaires.	☐	☐

STATE OF CALIFORNIA
Outdoor Lighting
NRCC-LTO-E — CALIFORNIA ENERGY COMMISSION

CERTIFICATE OF COMPLIANCE			NRCC-LTO-E
Project Name:	Madera Industrial WHSE	**Report Page:**	**(Page 7 of 7)**
Project Address:	S. Schnoor Avenue	**Date Prepared:**	9/17/2021

DOCUMENTATION AUTHOR'S DECLARATION STATEMENT

I certify that this Certificate of Compliance documentation is accurate and complete.

Documentation Author Name: Daniel Field	Documentation Author Signature: *Daniel Field*
Company: GMA Consulting Engineers & Architects, Inc.	Signature Date: 9/17/21
Address: 7337 N. First St. Suite #110	CEA/ HERS Certification Identification (if applicable):
City/State/Zip: Fresno California 93720	Phone: (559) 435-1411

RESPONSIBLE PERSON'S DECLARATION STATEMENT

I certify the following under penalty of perjury, under the laws of the State of California:

1. The information provided on this Certificate of Compliance is true and correct.
2. I am eligible under Division 3 of the Business and Professions Code to accept responsibility for the building design or system design identified on this Certificate of Compliance (responsible designer)
3. The energy features and performance specifications, materials, components, and manufactured devices for the building design or system design identified on this Certificate of Compliance conform to the requirements of Title 24, Part 1 and Part 6 of the California Code of Regulations.
4. The building design features or system design features identified on this Certificate of Compliance are consistent with the information provided on other applicable compliance documents, worksheets, calculations, plans and specifications submitted to the enforcement agency for approval with this building permit application.
5. I will ensure that a completed signed copy of this Certificate of Compliance shall be made available with the building permit(s) issued for the building, and made available to the enforcement agency for all applicable inspections. I understand that a completed signed copy of this Certificate of Compliance is required to be included with the documentation the builder provides to the building owner at occupancy.

Responsible Designer Name: Tom Dukes	Responsible Designer Signature: [signature]
Company: Performance Electric	Date Signed: 2021-09-17
Address:	License:
City/State/Zip:	Phone: (559) 631-1000

2019CBC City of Madera Building Department
The approval of these plans does not prevent the City of Madera from requiring correction of errors or omissions in the plans, specifications or construction. Subject to field inspections and approvals. Laws, Codes and ordinances
2019CBC
APPROVED
By: [signature]
Date: MAR 03 2022

BY | REVISION | DATE

ANY INFORMATION OR DATA ON THIS DRAWING IS NOT INTENDED TO BE SUITABLE FOR REUSE BY ANY PERSON, FIRM, CORPORATION, OR ANY OTHERS ON EXTENSIONS OF THIS PROJECT OR FOR ANY USE ON ANY OTHER PROJECT. ANY REUSE WITHOUT WRITTEN VERIFICATION AND ADAPTATION BY THE ENGINEER FOR THE SPECIFIC PURPOSE INTENDED WILL BE AT THE USER'S SOLE RISK AND WITHOUT LIABILITY OR LEGAL EXPOSURE TO THE ENGINEER.

SEAL

TYPICAL MECHANICAL FLOOR PLAN

LEASE FLEX. / WAREHOUSE BUILDINGS
FOR
MADERA INDUSTRIAL WHSE, LLC
S. SCHNOOR AVENUE, MADERA, CA

JOB NUMBER 21107
DESIGNED BY
DRAWN BY
DATE 9/09/2021
SHEET NUMBER E6

BUILDING WALL PACKS ARE A MAXIMUM OF 30' APART

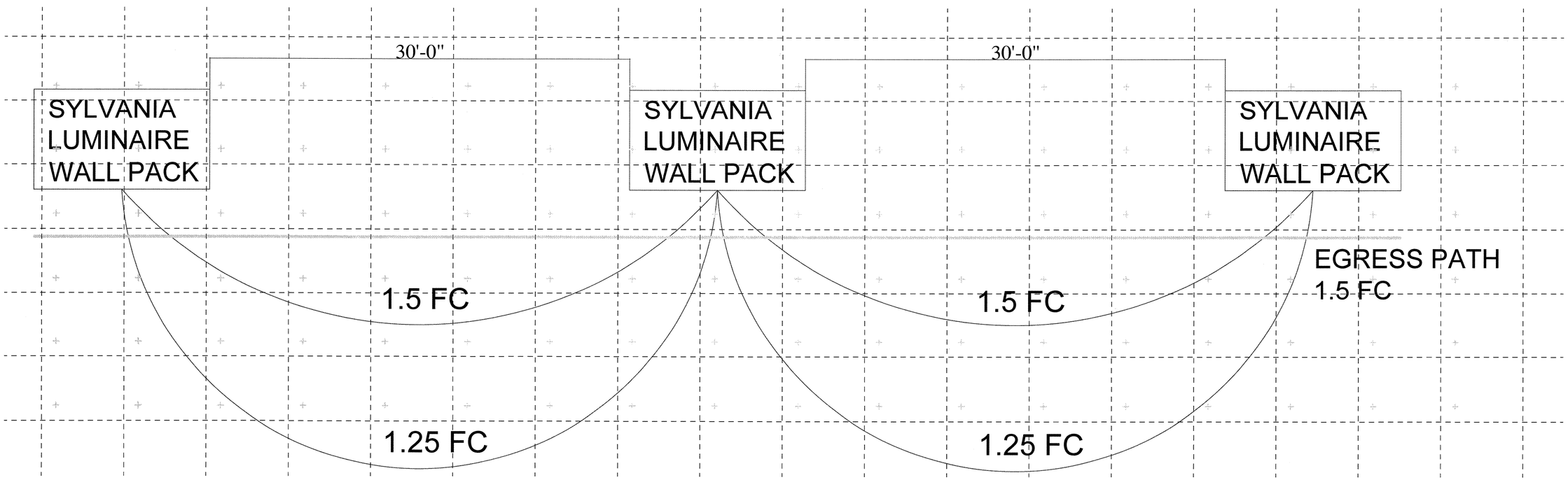

REFER TO SHEET E3 (1 OF 4, 3 OF 4, AND 2 OF 2) TO CONFIRM PHOTOMETRICS

PLEASE REFER TO SHEET A1-0 FOR EGRESS PATH AND E3 FOR LIGHTING SPECS
NO LIGHTS ARE OVER 30' APART
MEETS AND EXCEEDS CBC FOR EGRESS LIGHTING

2019CBC
City of Madera
Building Department
The approval of these plans does not relieve the City of Madera from requiring correction of errors or omissions found in the plans and specifications or from requiring them to be made to meet the requirements of all laws, codes and ordinances.
APPROVED
By:
Date: MAR 03 2022

CONTRACTOR:

DBKO
DESIGN BUILD
UCF032283
8839 NORTH CEDAR #374
FRESNO, CA 93720
(559) 930-DBKO

WHSE PARTNERS

DATE	REVISION	BY
9/08/2021		BN

ANY INFORMATION OR DATA ON THIS DRAWING IS NOT INTENDED TO BE SUITABLE FOR REUSE BY ANY PERSON, FIRM, CORPORATION, OR ANY OTHERS ON EXTENSIONS OF THIS PROJECT OR FOR ANY USE ON ANY OTHER PROJECT. ANY REPRODUCTION OF THIS DRAWING WITHOUT WRITTEN PERMISSION OF THE ENGINEER FOR SPECIFIC PURPOSE INTENDED WILL BE AT THE USER'S SOLE RISK AND WITHOUT LIABILITY OR LEGAL EXPOSURE TO THE ENGINEER.

SEAL

EGRESS PLAN

LEASE FLEX. / WAREHOUSE BUILDINGS
FOR
MADERA INDUSTRIAL WHSE, LLC.
S. SCHNOOR AVENUE
MADERA, CA 93637

JOB NUMBER	
DESIGNED BY	TD
DRAWN BY	BN
DATE	9/08/2021
SHEET NUMBER	E7

TABLE 5.303.6
STANDARDS FOR PLUMBING FIXTURES AND FIXTURE FITTINGS

REQUIRED STANDARDS	
WATER CLOSETS (TOILETS) – FLUSHOMETER VALVE TYPE SINGLE FLUSH MAXIMUM FLUSH VOLUME	ASME A 112.19.2/CSA B45.1 – 1.28 GAL (4.8L)
WATER CLOSETS (TOILETS) – FLUSHOMETER VALVE TYPE DUAL FLUSH MAXIMUM FLUSH VOLUME	ASME A 112.19.14 AND USEPA WATERSENSE TANK–TYPE HIGH EFFICIENCY TOILET SPECFICATION – 1.28 GAL (4.8L)
WATER CLOSETS (TOILETS) – TANK TYPE	U.S. EPA WATERSENSE TANK–TYPE HIGH EFFICIENCY TOILET SPECFICATION
URINALS, FLOOR–MOUNT URINALS, WALL–MOUNT MAXIMUM FLUSH VOLUME	ASME A 112.19.2/CSA B45.1 – 0.5 GAL (1.9L) ASME A 112.19.14/CSA B45.1 – 0.125GAL (.47L)
URINALS, NONWATER URINALS	ASME A 112.19.19 (VITREOUS CHINA) ANSI Z124.9–2004 OR IAPMO Z124.9 (PLASTIC)
PUBLIC LAVATORY FAUCETS: MAXIMUM FLOW RATE – 0.5 GPM(1.9/MIN.)	ASME A 112.18.1/CSA B125.1
PUBLIC METERING SELF–CLOSING FAUCETS: MAXIMUM WATER USE – 0.20 GAL (.75L) PER METERING CYCLE	ASME A 112.18.1/CSA B125.1
RESIDENTIAL BATHROOM LAVATORY SINK FAUCETS: MAXIMUM FLOW RATE – 1.5 GPM (5.7L/MIN.)	ASME A 112.18.1/CSA B125.1

TABLE 5.303.2.3.1 FIXTURE FLOW RATES PER CAL GREEN CODE

FIXTURE TYPE	FLOW RATE	MAXIMUM FLOW RATE AT 20 PERCENT REDUCTION
SHOWERHEADS	2.0 GPM @ 80 PSI	1.8 GPM @ 80 PSI
LAVATORY FAUCETS[3] NON RESIDENTAL	0.5 GPM @ 60 PSI	0.35 GPM @ 60 PSI
KITCHEN FAUCETS[3]	1.8 GPM @ 60 PSI	1.6 GPM @ 60 PSI
WASH FOUNTAINS	1.8 GAL/CYCLE/20[RIM SPACE(in.) @ 60 PSI	1.6 GPM/20[RIM SPACE(in.) @ 60 PSI
METERING FAUCETS	0.20 GALLONS/CYCLE	0.18 GALLONS/CYCLE
METERING FAUCETS FOR WASH FOUNTAINS	0.20 GAL/CYCLE/20 [RIM SPACE(in.) @ 60 PSI	0.18 GAL/CYCLE 20 [RIM SPACE (in.) @ 60 PSI
GRAVITY TANK TYPE WATER CLOSETS	1.28 GALLONS / FLUSH	1.12 GALLONS / FLUSH[1]
FLUSHMETER TANK WATER CLOSETS	1.28 GALLONS / FLUSH	1.12 GALLONS / FLUSH[1]
FLUSHMETER VALVE WATER CLOSETS	1.28 GALLONS / FLUSH	1.12 GALLONS / FLUSH[1]
ELECTROMECHANICAL HYDRAULIC WATER CLOSETS	1.28 GALLONS / FLUSH	1.12 GALLONS / FLUSH[1]
URINALS	0.5 OR 0.125[4] GALLONS / FLUSH	0.44 OR 0.11[4] GALLONS / FLUSH

ALL FIXTURES AND FITTINGS TO COMPLY WITH TABLE 5.303.2.3.1 AND TABLE 5.303.6.
1. Includes water closets with an effective flush rate of 1.12 gallons or less when tested per ASME A 112.19.2 and ASME A 112.19.14.
2. See Table A5.503.2.2 for additional notes and references.
3. Where complying faucets are unavailable, aerators rated at .35 gpm or other means may be used to achieve reduction.
4. Floor–mounted urinals @ 0.5 GPR or wall–mounted urinals @ 0.125 GPF.

GENERAL NOTES

1. ALL WORK AND MATERIALS SHALL BE PERFORMED AND INSTALLED IN COMPLIENCE WITH THE FOLLOWING CODES AS ADOPTED BY THE INSPECTION AUTHORITY. NOTHING IN THESE PLANS IS TO BE CONSTRUCTED TO PERMIT WORK NOT CONFORMING TO THESE CODES OR OTHERS APPLICABLE TO THIS PROJECT.
   A) 2019 CALIFORNIA BUILDING CODE (CBC)
   B) 2019 CALIFORNIA PLUMBING CODE (CPC)
   C) 2019 CALIFORNIA MECHANICAL CODE (CMC)
   D) 2019 CALIFORNIA ELECTRICAL CODE (CEC)
   E) 2019 CALIFORNIA ENERGY CODE (effective date January 1, 2020
   F) 2019 CALIFORNIA GREEN BUILDING STANDARDS CODE (Cal Green)
2. ROUTE FULL SIZE DISCHARGE OF P & T RELIEF VALVES FROM WATER HEATER TO EXTERIOR OF BUILDING. DAYLIGHT @ (+/-) 6" ABOVE FINISHED GRADE AND ELBOW DOWN.
3. STORAGE TYPE WATER HEATER SHALL BE FACTORY INSULATED TO SATISFY A COMBINED THERMAL RESISTANCE OF R-16 OR GREATER.
4. PROVIDE FULL SIZE CONDENSATE DRAIN WITH DEEPWELL TRAP FOR ALL A/C UNITS. ROUTE CONDENSATE DRAIN TO NEAREST PLUMBING VENT AND TIE IN WITH APPROVED FITTINGS OR ROUTE TO PLANTER AREA.
5. ALL HOT WATER PIPING SHALL BE INSULATED WITH 1" THICK INSULATION AND HAVE AN R RATING OF R-4.2 FOR PIPE SIZES 1" OR LESS. FOR HOT WATER PIPING LARGER THAN 1", 1½" THICK INSULATION IS REQUIRED AND SHALL HAVE AN R RATING OF R-6
6. ALL WATER AND DRAIN PIPE UNDER ADA LAVATORIES AND ADA SINKS SHALL BE INSULATED AND PROTECTED AGAINST CONTAC AND THERE SHALL BE NO SHARP OR ABRASIVE SURFACES.
7. ALL PLUMBING VENTS SHALL TERMINATE 10' AWAY FROM ANY OUTSIDE AIR INTAKE.
8. DRAIN, WASTE AND VENT PIPE SHALL BE ABS, PVC-DWV, OR CAST IRON. VENT PIPE ABOVE GRADE MAY BE GALVANIZED IRON.
9. WATER PIPE SHALL BE TYPE M COPPER, ASTM 888, PEX TUBING ASTM F877. COPPER PIPE TYPE L BELOW GRADE SHALBE BRAZED AND WRAPPED WITH 40 MIL TAPE OR APPROVED PVC. GALVENIZED STEEL WATER PIPE IS PROHIBITED IN THE CITY OF FRESNO.
10. GAS PIPE SHALL BE SCHEDULE 40 BLACK STEEL, ASTM A-53, CSST PIPE CSA LC-1 (NFPA45:5.6.3.4.). BELOW GRADE PIPE POLYETHELNE, ASTM D 2513, SCHEDULE 40 GALV. STEEL SHALL HAVE A PROTECTIVE COATING OF POLYETHENE OR BE OF APPROVED PVC.
11. CHECK W/ THE WATER DEPARTMENT FOR R.P. (BACKFLOW PREVENTION) DEVICE REQUIREMENTS AND LOCATIONS.
12. ALL MATERIALS AND EQUIPMENT INSTALLED UNDER THIS CONTRACT SHALL BE GUARANTEED FREE FROM ALL MECHANICAL, ELECTRICAL, AND WORKMANSHIP DEFECTS FOR A PRIOR OF ONE YEAR FROM DATE OF FINAL ACCEPTANCE.
13. WORKMANSHIP:
    ALL WORK SHALL BE DONE IN A NEAT AND WORKMANLIKE MANNER ACCORDING TO THE BEST TRADE PRACTICED BY THOSE SKILLED IN THE PARTICULAR TRADE: PIPES, FIXTURES, EQUIPMENT, ETC., TO BE LEVEL, SQUARE, OR CENTERED, ETC., TO GIVE NEAT AND PLEASING APPEARANCE. ALL EQUIPMENT IS TO BE INSTALL STRICTLY PER MANUFACTURERS RECOMMENDATIONS. COORDINATE ALL WORK W/ OTHER TRADES.
14. OFFICE OR PUBLIC BUILDINGS FOR USE BY MORE THAN SIX PEOPLE SHALL HAVE ON DRINKING FOUNTAIN. (CPC APPENDIX "C").
15. ALL WATER CLOSETS FOR PUBLIC USE SHALL BE ELONGATED BOWLS W/ OPEN FRONT SEATS. (CPC 409)
16. PLUMBING FIXTURES SHALL MEET STATE OF CALIFORNIA HANDICAPPED REQUIREMENTS.
17. ALL PLUMBING WORK SHALL COMPLY W/ THE LATEST UPC REQUIREMENTS.
18. PROVIDE PERMANENT IDENTIFICATION ON ALL HEATING AND COOLING EQUIPMENT AS TO THE AREA OF SPACE SERVED BY THE EQUIPMENT. (CMC 303.6)
19. PROVIDE CLEANOUTS FOR WASTE LINES EXCEEDING 5' FROM THE MAIN. CLEANOUTS SHALL BE SIZED PER CPC TABLE 707.1.
20. ATTIC WATER HEATER SHALL BE EQUIPPED W/ AN APPROVED TYPE PAN W/ A ¾" DRAIN TO EXTERIOR OF BUILDING AT A CONSPICUOUS LOCATION.
21. ATTIC MOUNTED WATER HEATERS SHALL BE ACCESSIBLE BY A FULL 24"x48" APPLIES PER (CPC 511.2) INCLUDING A LIGHT SWITCH AND FIXTURE.
22. DISABLED ACCESS WATER CLOSET TRIP LEVERS. (OR FLUSHOMETER VALVE HANDLES) SHALL BE MOUNTED ON THE WIDE SIDE.
23. HOT WATER DELIVERED FROM PUBLIC USE LAVATORIES SHALL BE LIMITED TO A MAXIMUM HOT WATER TEMPERATURE OF 110° F AND THE WATER HEATER THERMOSTAT SHALL NOT BE CONDSIDERED A CONTROL FOR MEETING THIS PROVISION. CPC 421.2.
24. ALL WASTE LINES TO BE A MINIMUM 2% SLOPE PER CPC 708.0.
25. ALL PLUMBING CONVEYING OR DISPENSING WATER FOR HUMAN CONSUMPTION SHALL COMPLY WITH AB1953 FOR LEAD CONTENT.

DOMESTIC WATER DEMAND AND SIZING

WATER CALCULATIONS FOR BUILDINGS "A" AND "B"

WATER METER SIZE 2"
TOTAL FIXTURE UNITS 118 EQUAL TOTAL 50 GPM
TOTAL DISTANCE FROM WATER METER TO MOST REMOTE PLBG. FIXTURE. 500 FT.
TOTAL RISE FOR HEAD LOSS 3 FT. x 0.43 .... 1.5 PSI
PSI REQUIRED FOR WATER CLOSET/URINAL (*F.V.=15.0 PSI, F.T. = 8.0 PSI) .... 8.0 PSI
PSI FLOW LOSS THRU WATER METER (CHART A–102.2) .... 1.5 PSI
PSI FLOW LOSS THRU BACKFLOW PREVENTER (RP=12.0 PSI, D.C. = 12.0 PSI)........ 12.0 PSI
TOTAL SYSTEM LOSS .... 22.0 PSI

MINIMUM PSI AVAILABLE @ JOB SITE .... 35.0 PSI
TOTAL SYSTEM LOSS IN PSI .... 22.0 PSI
REMAINING PSI AVAILABLE (IF NEGATIVE USE BOOSTER PUMP) .... 13.0 PSI
BOOSTER PUMP PSI .... – PSI
TOTAL REMAINING PSI AVAILABLE .... 13.0 PSI
PSI AVAILABLE 13 ÷ 500 TOTAL FEET = .026 x100= 2.6 PSI/100 FT

USE LINE "3" CHART #A–105.1(1) C.P.C.

PIPE	PIPE WILL DELIVER (GPM)	GPM FOR *F.V. FIXTURE UNITS	*F.T. FIXTURE UNITS
6"			
5"			
4"			
3"			
2 1/2"			
2"	60		175
1 1/2"	30	–	50
1 1/4"	18	–	22
1"	10	–	10
3/4"	5	–	5
1/2"	2	–	2

REMARKS
F.T. = FLUSH TANK
F.V. = FLUSH VALVE

DOMESTIC WATER DEMAND AND SIZING

WATER CALCULATIONS FOR BUILDINGS "C" AND "D"

WATER METER SIZE 2"
TOTAL FIXTURE UNITS 112 EQUAL TOTAL 48 GPM
TOTAL DISTANCE FROM WATER METER TO MOST REMOTE PLBG. FIXTURE. 500 FT.
TOTAL RISE FOR HEAD LOSS 10 FT. x 0.43 .... 1.5 PSI
PSI REQUIRED FOR WATER CLOSET/URINAL (*F.V.=15.0 PSI, F.T. = 8.0 PSI) .... 8.0 PSI
PSI FLOW LOSS THRU WATER METER (CHART A–102.2) .... 1.5 PSI
PSI FLOW LOSS THRU BACKFLOW PREVENTER (RP=12.0 PSI, D.C. = 12.0 PSI)........ 12.0 PSI
TOTAL SYSTEM LOSS .... 22.0 PSI

MINIMUM PSI AVAILABLE @ JOB SITE .... 35.0 PSI
TOTAL SYSTEM LOSS IN PSI .... 22.0 PSI
REMAINING PSI AVAILABLE (IF NEGATIVE USE BOOSTER PUMP) .... 13.0 PSI
BOOSTER PUMP PSI .... – PSI
TOTAL REMAINING PSI AVAILABLE .... 13.0 PSI
PSI AVAILABLE 13 ÷ 500 TOTAL FEET = .026 x100= 2.6 PSI/100 FT

USE LINE "3" CHART #A–105.1(1) C.P.C.

PIPE	PIPE WILL DELIVER (GPM)	GPM FOR *F.V. FIXTURE UNITS	*F.T. FIXTURE UNITS
6"			
5"			
4"			
3"			
2 1/2"			
2"	60		175
1 1/2"	30	–	50
1 1/4"	18	–	22
1"	10	–	10
3/4"	5	–	5
1/2"	2	–	2

REMARKS
F.T. = FLUSH TANK
F.V. = FLUSH VALVE

FIXTURE SCHEDULE

1. ADA WATER CLOSET, TANK TYPE, HANDLE ON WIDE SIDE, FLOOR MOUNT, ELONG BOWL, OPEN END SEAT, 18" MAX HEIGHT
   3"W / 2"V / ½" CW
2. ADA LAVATORY, WALL MOUNT, SINGLE LEVER FAUCET, 34" MAX RIM HEIGHT , 29" MIN. KNEE CLEARANCE, TRAP BOOT.
   2" W / 2" V / ½ CW/ HW FROM MULTI LAV INSTANTANEOUS WATER HEATER
3. ADA SINK, WALL MOUNT, SINGLE LEVER FAUCET, 34" MAX RIM HEIGHT , 29" MIN. KNEE CLEARANCE, TRAP BOOT.
   2" W / 2" V / ½ CW/ HW FROM MULTI LAV INSTANTANEOUS WATER HEATER
4. INSTANTANEOUS WATER HEATER MULTI-LAV, EEMAX LAV ADVANTAGE SPEX 4208T ML: 4.1 KW , 20AMP.
   1/2" CW/ ⅜" SUPPLY HOT WATER.
5. HOSE BIB WITH VACUUM BREAKER
   ½" CW
6. ROOF TOP HOSE BIB WITH VACUUM BREAKER
   ½" CW
7. SUMP PUMP, ZOELLER M98, CAST IRON, 1/2 HP, 1½" EJECTION PORT VERTICAL FLOAT, CHECK VALVE, 35' CORD, IN TRAFFIC RATED PRECAST CONCRETE BOX. 4500 PSI CONCRETE, H-20 LOAD RATE.
   SEE LOADING DOCK SUMP PUMP DETAIL ON SHEET P-5.0D.

EVAP COOLER CONNECTION DETAIL

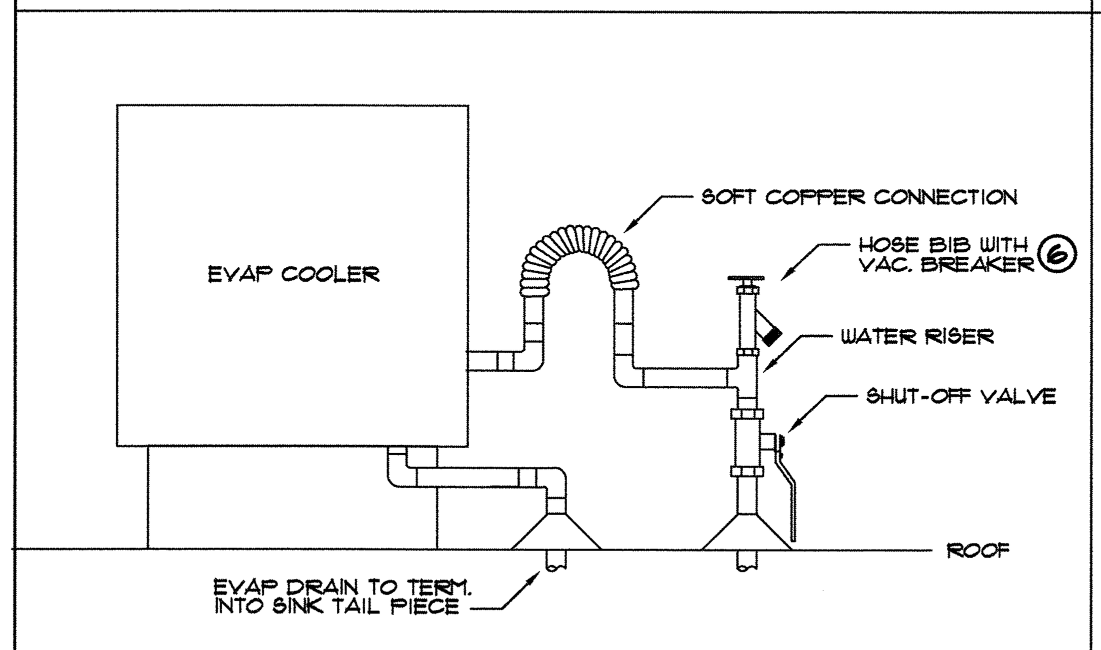

INDOOR MINI SPLIT UNIT CONDENSATE DRAIN DETAIL

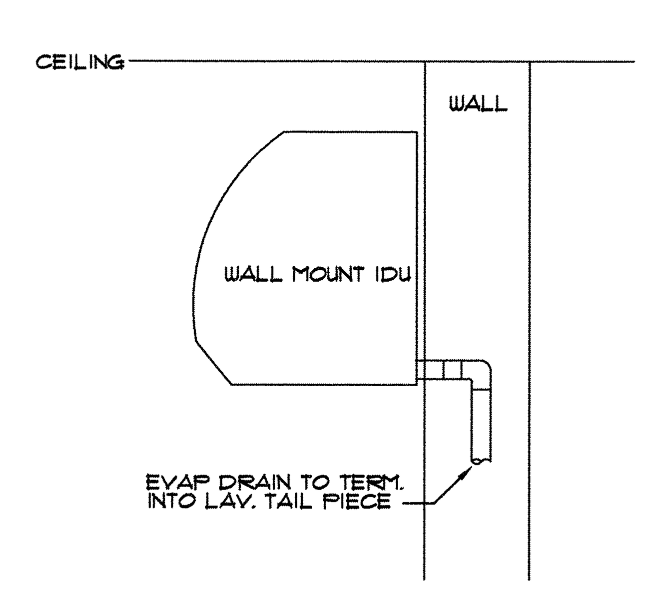

INSTA-HOT HOT WATER SUPPLY CONNECTION DETAIL

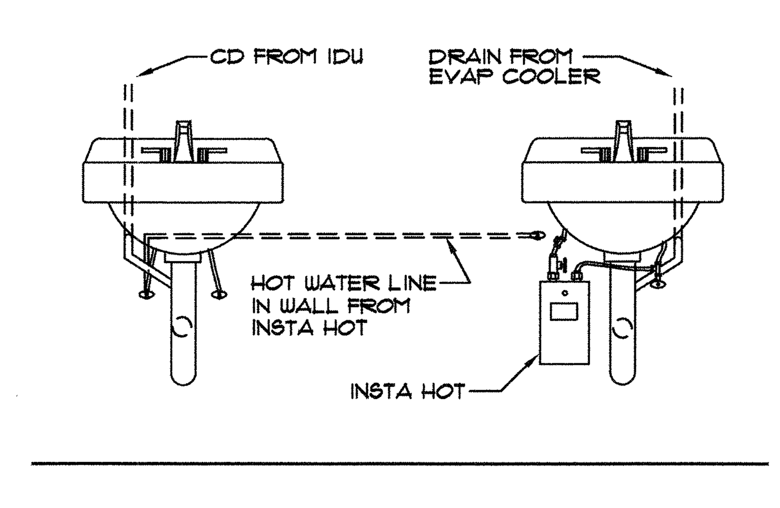

NOTES

1. ALL WASTE LINES 4" AND LARGER TO RUN AT ⅛" PER FOOT. (1%) SLOPE TO MEET CITY SEWER DEPTH.
2. ALL WASTE LINES, VENT LINES AND WATER LINES PENETRATING CONCRETE SLAB SHALL BE PROTECTED WITH A RIDGID SLEEVE. WATER CLOSET RISER , FLOOR DRAIN AND F.D. TAILPIECE EXCLUDED.
3. MECHANICAL INDOOR WALL UNIT CONDENSATE DRAIN TO RUN THROUGH WALL AND TERMINATE INTO LAVATORY TAILPIECE.
4. EVAPORATIVE COOLER TO HAVE ½"CW SHUT-OFF VALVE AND ¾" DRAIN TO TERMINATE INTO WAREHOUSE SINK TAILPIECE.

SYMBOLS

SOV	SHUT–OFF VALVE	
SOVB	SHUT–OFF VALVE IN BOX	
FCO	FLOOR CLEAN–OUT	
WCO	WALL CLEAN–OUT	
IWH	INSTANTANEOUS WATER HEATER	
HB	HOSE BIB WITH VAC. BREAKER	
RTHB	ROOF TOP HOSE BIB WITH VAC. BREAKER	

LEGEND

WASTE
VENT
COLD WATER
HOT WATER
C — CONDENSATE

GT PLUMBING
LICENSE: #1050771
ADDRESS: 5405 E. HAMPTON WAY FRESNO, CA. 93727
CELL#: (559) 779-9665
EMAIL: Tonygaitan@outlook.com

2019CBC City of Madera Building Department
The approval of these plans does not prevent the City of Madera from requiring correction of errors or omissions in the plans, specifications of construction. Subject to field inspections and approval ... Codes and ... ordinances.
APPROVED
By:
Date: MAR 03 2022
2019CBC 2019CBC

DBKO DESIGN BUILD
WHSE PARTNERS

DATE	REVISION	BY
11/11/2021	CITY OF MADERA PLAN CHECK CORRECTION	

ANY INFORMATION OR DATA ON THIS DRAWING IS NOT INTENDED TO BE SUITABLE FOR REUSE BY ANY PERSON, FIRM, CORPORATION, OR ANY OTHERS ON EXTENSIONS OF THIS PROJECT OR FOR ANY USE ON ANY OTHER PROJECT. ANY REUSE WITHOUT WRITTEN VERIFICATION AND ADAPTATION BY THE ENGINEER FOR THE SPECIFIC PURPOSE INTENDED WILL BE AT THE USER'S SOLE RISK AND WITHOUT LIABILITY OR LEGAL EXPOSURE TO THE ENGINEER.

SEAL

GENERAL NOTES AND DETAILS

LEASE FLEX. / WAREHOUSE BUILDINGS
FOR
MADERA INDUSTRIAL WHSE, LLC
325/335/345/355 S. SCHNOOR AVENUE, MADERA, CA

JOB NUMBER 21107
DESIGNED BY Designer
DRAWN BY Author
DATE 7/XX/2021
SHEET NUMBER P-1.0

7/11/2021 11:49:10 AM
G:\Shared drives\DBKOmpany\PROJECTS\20106_WHSE Partners-Fresno, CA\Plans, Calcs & Specs\Arch-Struct (DBKO)\Drawings\Franco Property - Madera\20106 -WP - Franco-Madera_2021-07-05.rvt

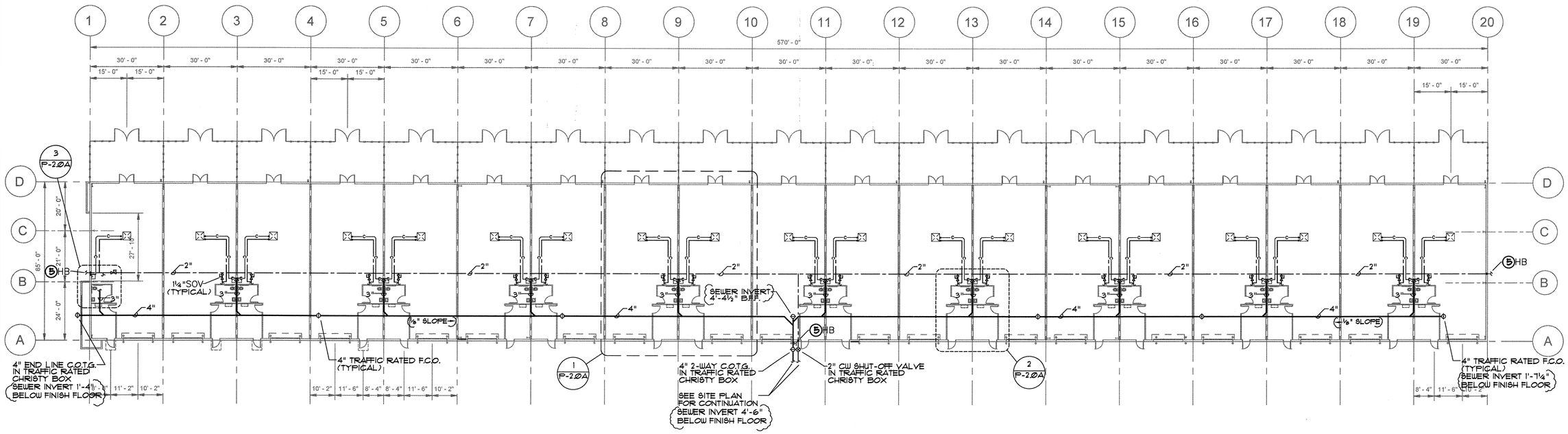

OVERALL PLUMBING PLAN — SCALE: 1" = 20'-0"

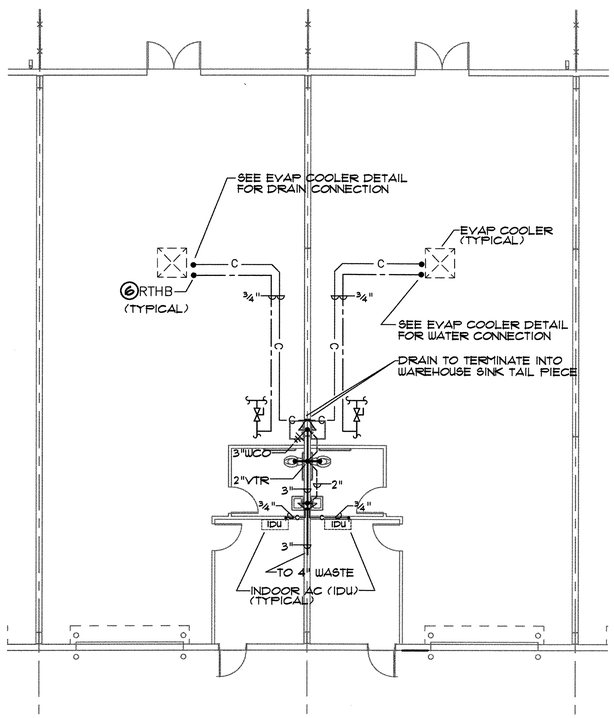

1 ENLARGED TENANT SPACE PLUMBING PLAN — SCALE: ⅛" = 1'-0"

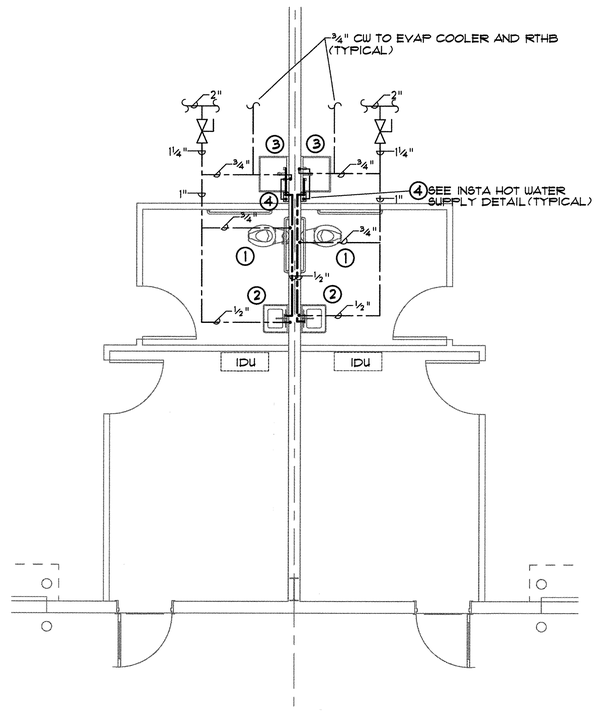

2 ENLARGED TENANT SPACE DOMESTIC WATER PLAN — SCALE: ¼" = 1'-0"

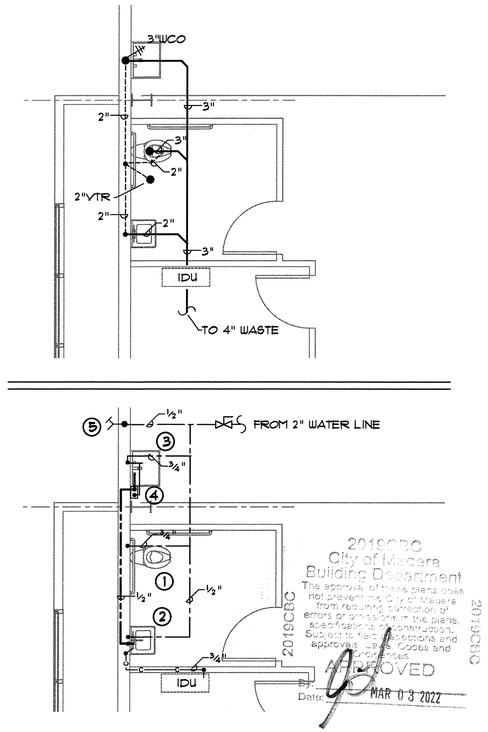

3 ENLARGED RESTROOM PLUMBING PLAN — SCALE: ¼" = 1'-0"

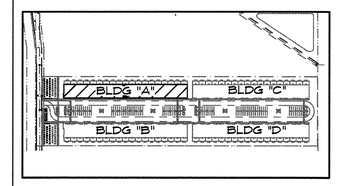

SITE MAP

LEGEND

- WASTE
- VENT
- COLD WATER
- HOT WATER
- C — CONDENSATE

SYMBOLS

- SOV — SHUT-OFF VALVE
- SOVB — SHUT-OFF VALVE IN BOX
- FCO — FLOOR CLEAN-OUT
- WCO — WALL CLEAN-OUT
- IWH — INSTANTANEOUS WATER HEATER
- HB — HOSE BIB WITH VAC. BREAKER
- RTHB — ROOF TOP HOSE BIB WITH VAC. BREAKER

GT PLUMBING
LICENSE: #1060771
ADDRESS: 5405 E. HAMPTON WAY
FRESNO, CA. 93727
CELL#: (559) 779-9655
EMAIL: Tonygastan@outlook.com

DBKO DESIGN BUILD

WHSE PARTNERS

DATE	REVISION	BY
11/1/2021	CITY OF MADERA PLAN CHECK CORRECTION	

SEAL

ANY INFORMATION OR DATA ON THIS DRAWING IS NOT INTENDED TO BE SUITABLE FOR REUSE BY ANY PERSON, FIRM OR CORPORATION FOR ANY PURPOSE OTHER THAN THE SPECIFIC PROJECT. ANY REUSE WITHOUT WRITTEN VERIFICATION AND ADAPTATION BY THE ENGINEER FOR THE SPECIFIC PURPOSE INTENDED WILL BE AT THE USER'S SOLE RISK AND WITHOUT LIABILITY OR LEGAL EXPOSURE TO THE ENGINEER.

BLDG. A PLUMBING PLAN

LEASE FLEX. / WAREHOUSE BUILDINGS
FOR
MADERA INDUSTRIAL WHSE, LLC
325 S. SCHNOOR AVENUE, MADERA, CA

JOB NUMBER: 21107
DESIGNED BY: Designer
DRAWN BY: Author
DATE: 4/27/2021
SHEET NUMBER: P-2.0A

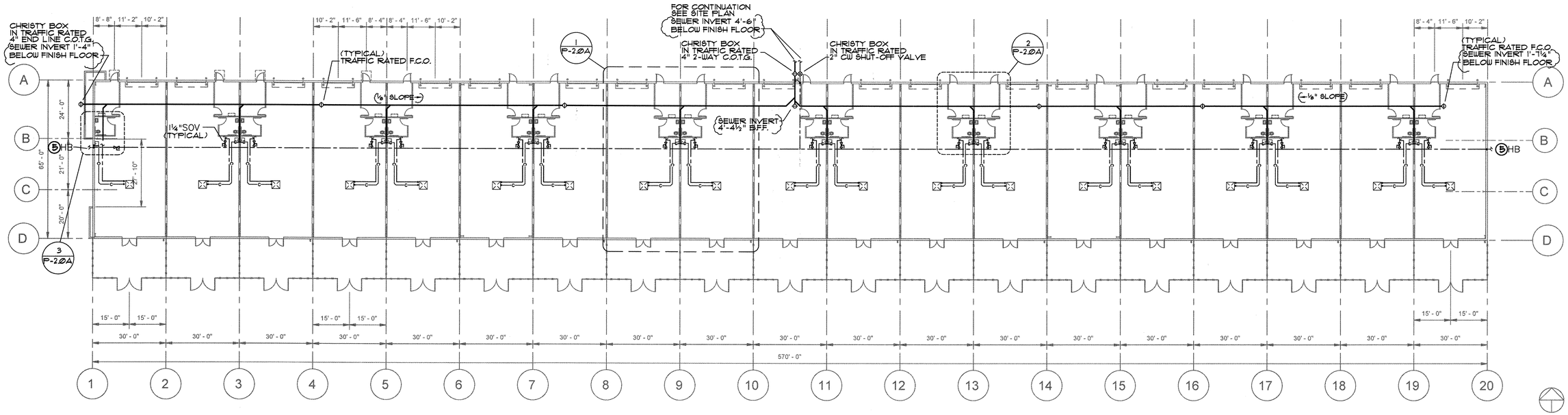

OVERALL PLUMBING PLAN

SCALE: 1" = 20'-0"

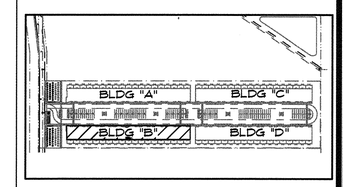

SITE MAP

LEGEND

- WASTE
- VENT
- COLD WATER
- HOT WATER
- C — CONDENSATE

SYMBOLS

	SOV	SHUT-OFF VALVE
	SOVB	SHUT-OFF VALVE IN BOX
	FCO	FLOOR CLEAN-OUT
	WCO	WALL CLEAN-OUT
	IWH	INSTANTANEOUS WATER HEATER
	HB	HOSE BIB WITH VAC. BREAKER
	RTHB	ROOF TOP HOSE BIB WITH VAC. BREAKER

GT PLUMBING
LICENSE: #1060771
ADDRESS: 5405 E. HAMPTON WAY FRESNO, CA. 93727
CELL#: (559) 779-9665
EMAIL: Tonygwatan@outlook.com

2019CBC
City of Madera
Building Department
This approval of these plans does not prevent the City of Madera from requiring correction of errors or omissions in the plans, specifications or construction. Subject to field inspections and applicable laws, codes and ordinances.
APPROVED
By:
Date: MAR 03 2022

DBKO DESIGN - BUILD

WHSE PARTNERS

DATE	REVISION	BY
11/1/2021	CITY OF MADERA PLAN CHECK CORRECTION	

SEAL

ANY INFORMATION OR DATA ON THIS DRAWING IS NOT INTENDED TO BE SUITABLE FOR REUSE BY ANY PERSON, FIRM, CORPORATION, OR ANY OTHER ON EXTENSIONS OF THIS PROJECT OR FOR ANY USE ON ANY OTHER PROJECT. ANY REUSE WITHOUT WRITTEN VERIFICATION OR ADAPTATION BY THE ENGINEER FOR THE SPECIFIC PURPOSE INTENDED WILL BE AT THE USER'S SOLE RISK AND WITHOUT LIABILITY OR LEGAL EXPOSURE TO THE ENGINEER.

BLDG. B PLUMBING PLAN

LEASE FLEX. / WAREHOUSE BUILDINGS
FOR
MADERA INDUSTRIAL WHSE, LLC
345 S. SCHNOOR AVENUE, MADERA, CA

JOB NUMBER	21107
DESIGNED BY	Designer
DRAWN BY	Author
DATE	4/27/2021
SHEET NUMBER	P-3.0B

G:\Shared drives\DBKO\Company\PROJECTS\2019_WHSE Partners-Fresno, CA\Plans, Calcs & Specs\Arch-Struct\DBKO\Drawings\Franco Property - Madera\WHSE-BLDGB_2021-07-12.rvt 7/11/2021 11:12:46 AM
G:\Shared drives\DBKO\Company\PROJECTS\2019_WHSE Partners-Fresno, CA\Plans, Calcs & Specs\Arch-Struct\DBKO\Drawings\Franco Property - Madera\2019.vbp - Franco-Madera_2021-07-05.vbt 7/11/2021 11:49:19 AM

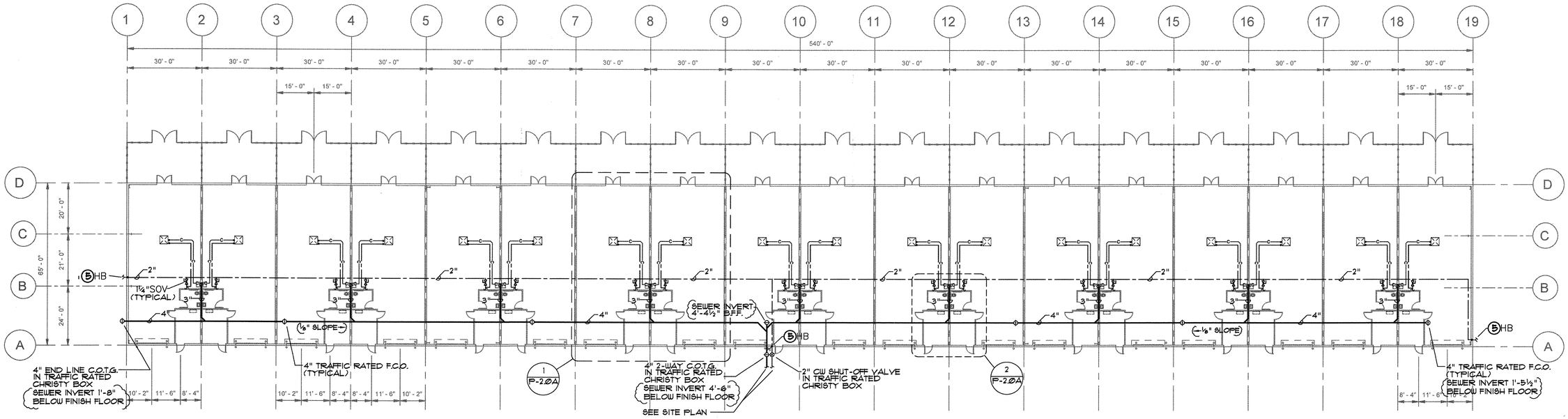

OVERALL PLUMBING PLAN

SCALE: 1" = 20'-0"

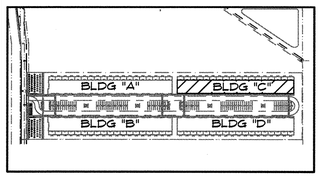

SITE MAP

LEGEND

- WASTE
- VENT
- COLD WATER
- HOT WATER
- C — CONDENSATE

SYMBOLS

	SOV	SHUT-OFF VALVE
	SOVB	SHUT-OFF VALVE IN BOX
	FCO	FLOOR CLEAN-OUT
	WCO	WALL CLEAN-OUT
	IWH	INSTANTANEOUS WATER HEATER
	HB	HOSE BIB WITH VAC. BREAKER
	RTHB	ROOF TOP HOSE BIB WITH VAC. BREAKER

GT PLUMBING
LICENSE: #1050771
ADDRESS: 5405 E. HAMPTON WAY
FRESNO, CA. 93727
CELL#: (559) 779-9665
EMAIL: Tonygastan@outlook.com

2019CBC
City of Madera
Building Department
The approval of these plans shall not prevent the City of Madera from requiring correction of errors or omissions in the plans, specifications or construction. Subject to field inspections and approval of all Codes and Ordinances.
APPROVED
By:
Date: MAR 03 2022
2019CBC

DBKO DESIGN BUILD

WHSE PARTNERS

DATE	REVISION	BY
11/11/2021	CITY OF MADERA PLAN CHECK CORRECTION	

SEAL

ANY INFORMATION OR DATA ON THIS DRAWING IS NOT INTENDED TO BE SUITABLE FOR REUSE BY ANY PERSON, FIRM OR CORPORATION FOR ANY PURPOSE OTHER THAN THE SPECIFIC PROJECT FOR WHICH IT WAS PREPARED AND PUBLISHED. ANY REUSE WITHOUT WRITTEN VERIFICATION AND ADAPTATION BY THE ENGINEER FOR THE SPECIFIC PURPOSE INTENDED WILL BE AT THE USER'S SOLE RISK AND WITHOUT LIABILITY OR LEGAL EXPOSURE TO THE ENGINEER.

BLDG. C PLUMBING PLAN

LEASE FLEX. / WAREHOUSE BUILDINGS
FOR
MADERA INDUSTRIAL WHSE, LLC
335 S. SCHNOOR AVENUE, MADERA, CA

JOB NUMBER	21107
DESIGNED BY	Designer
DRAWN BY	Author
DATE	4/27/2021
SHEET NUMBER	P-4.0C

G:\Shared Drives\PROGRAMS\PROJECTS\2021\HB_MHSE Partners Fresno, CA\Plans, Cases & Specs\Arch-Shell (DBKO)\Plumbing\Madera Property - Master\MHSE-Bldg-PC-P4.0C.dwg\Tab: P-4.0C 7/11/2021 11:43:16 AM

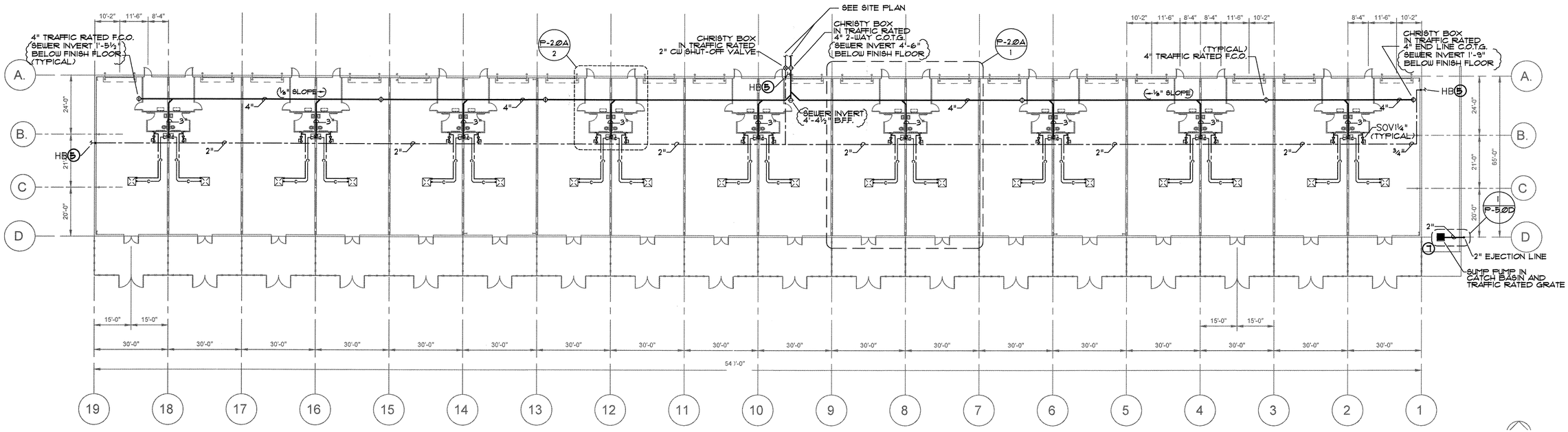

OVERALL PLUMBING PLAN

SCALE: 1" = 20'-0"

LOADING DOCK SUMP PUMP DETAIL (7)

NO SCALE

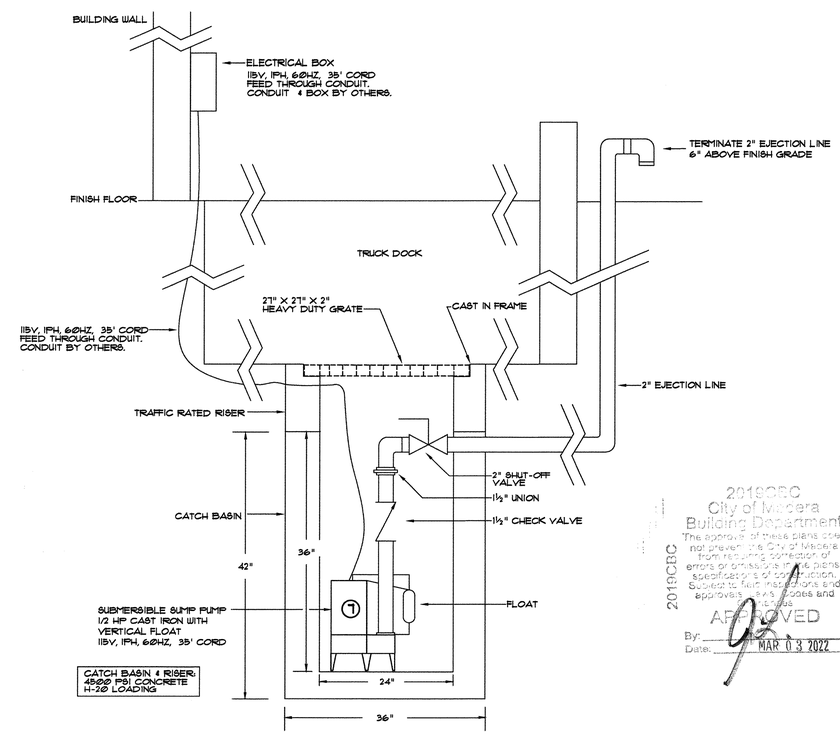

2019CBC
City of Madera
Building Department
The approval of these plans does not prevent the City of Madera from requiring correction of errors or omissions in the plans, specifications and construction. Subject to field inspections and approvals as required by codes and ordinances.
APPROVED
By:
Date: MAR 03 2022
2019CBC

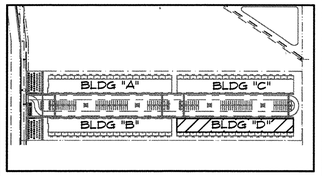

SITE MAP

LEGEND

- WASTE
- VENT
- COLD WATER
- HOT WATER
- C — CONDENSATE

SYMBOLS

- SOV SHUT-OFF VALVE
- SOVB SHUT-OFF VALVE IN BOX
- FCO FLOOR CLEAN-OUT
- WCO WALL CLEAN-OUT
- IWH INSTANTANEOUS WATER HEATER
- HB HOSE BIB WITH VAC. BREAKER
- RTHB ROOF TOP HOSE BIB WITH VAC. BREAKER

G PLUMBING
LICENSE: #1050771
ADDRESS: 5405 E. HAMPTON WAY
FRESNO, CA. 93727
CELL#: (559) 779-9963
EMAIL: Tonygaitan@outlook.com

DBKO DESIGN-BUILD

WHSE PARTNERS

DATE	REVISION	BY
11/1/2021	CITY OF MADERA PLAN CHECK CORRECTION	

ANY INFORMATION OR DATA ON THIS DRAWING IS NOT INTENDED TO BE SUITABLE FOR REUSE BY ANY PERSON, FIRM OR CORPORATION FOR ANY PURPOSE OTHER THAN THE SPECIFIC PROJECT FOR WHICH IT WAS PREPARED. ANY REUSE WITHOUT WRITTEN VERIFICATION AND ADAPTATION BY THE ENGINEER FOR THE SPECIFIC PURPOSE INTENDED WILL BE AT THE USER'S SOLE RISK AND WITHOUT LIABILITY OR LEGAL EXPOSURE TO THE ENGINEER.

SEAL

BLDG. D PLUMBING PLAN

LEASE FLEX. / WAREHOUSE BUILDINGS
FOR
MADERA INDUSTRIAL WHSE, LLC
355 S. SCHNOOR AVENUE, MADERA, CA

JOB NUMBER	21107
DESIGNED BY	Designer
DRAWN BY	Author
DATE	4/27/2021
SHEET NUMBER	P-5.0D

RECEIVED
DEC 08 2021
BUILDING DEPARTMENT

JOB COPY

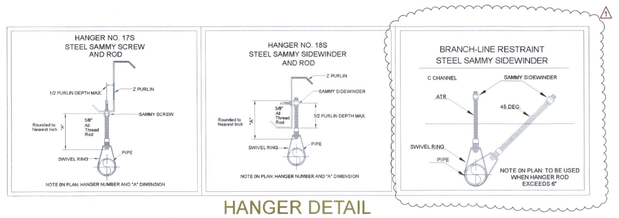

HANGER DETAIL

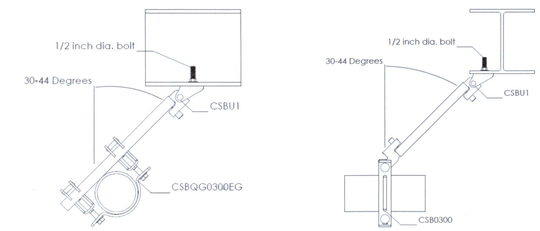

Steel (I-Beam shown, C Purlin and Z Purlin Similar) **Steel (I-Beam shown, C Purlin and Z Purlin Similar)**

BRACE DETAIL

REMOTE AREA #1 BUILDING "A"

COMPANY PRINT NO. FP - 3 DATED 11/13/2021
FOR MADERA INDUSTRIAL WAREHOUSE BLDG. A, B, C, & D
AT 325 S. SCHNOOR AVE CONTRACT NO. 21016
IS DESIGNED TO DISCHARGE AT A RATE OF 20 GPM
(L/min) PER SQFT (m2) OF FLOOR AREA OVER A MAXIMUM AREA OF
1585.90 SQFT (m2) WHEN SUPPLIED WATER AT THE RATE OF
354.74 GPM (L/min) AT 47.383 PSI (bars) AT THE BASE OF THE RISER
HOSE STREAM ALLOWANCE OF 250 GPM (L/min)
IS INCLUDED IN THE ABOVE.
OCCUPANCY CLASSIFICATION S1 / B - SPRINKLERED
COMMODITY CLASSIFICATION CLASS I - IV
MAXIMUM STORAGE HEIGHT 12'-0 FT.
MAX. COVERAGE PER HEAD 121.88 SQ. FT.
INSTALLED BY SAN JOAQUIN FIRE PROTECTION, INC.

REMOTE AREA #3 BUILDING "C"

COMPANY PRINT NO. FP - 3 DATED 11/13/2021
FOR MADERA INDUSTRIAL WAREHOUSE BLDG. A, B, C, & D
AT 335 S. SCHNOOR AVE CONTRACT NO. 21016
IS DESIGNED TO DISCHARGE AT A RATE OF 20 GPM
(L/min) PER SQFT (m2) OF FLOOR AREA OVER A MAXIMUM AREA OF
1585.90 SQFT (m2) WHEN SUPPLIED WATER AT THE RATE OF
251.77 GPM (L/min) AT 47.391 PSI (bars) AT THE BASE OF THE RISER
HOSE STREAM ALLOWANCE OF 250 GPM (L/min)
IS INCLUDED IN THE ABOVE.
OCCUPANCY CLASSIFICATION S1 / B - SPRINKLERED
COMMODITY CLASSIFICATION CLASS I - IV
MAXIMUM STORAGE HEIGHT 12'-0 FT.
MAX. COVERAGE PER HEAD 121.88 SQ. FT.
INSTALLED BY SAN JOAQUIN FIRE PROTECTION, INC.

REMOTE AREA #2 BUILDING "B"

COMPANY PRINT NO. FP - 3 DATED 11/13/2021
FOR MADERA INDUSTRIAL WAREHOUSE BLDG. A, B, C, & D
AT 345 S. SCHNOOR AVE CONTRACT NO. 21016
IS DESIGNED TO DISCHARGE AT A RATE OF 20 GPM
(L/min) PER SQFT (m2) OF FLOOR AREA OVER A MAXIMUM AREA OF
1585.90
343.93 GPM (L/min) AT 47.733 PSI (bars) AT THE BASE OF THE RISER
HOSE STREAM ALLOWANCE OF 250 GPM (L/min)
IS INCLUDED IN THE ABOVE.
OCCUPANCY CLASSIFICATION S1 / B - SPRINKLERED
COMMODITY CLASSIFICATION CLASS I - IV
MAXIMUM STORAGE HEIGHT 12'-0 FT.
MAX. COVERAGE PER HEAD 121.88 SQ. FT.
INSTALLED BY SAN JOAQUIN FIRE PROTECTION, INC.

REMOTE AREA #4 BUILDING "D"

COMPANY PRINT NO. FP - 3 DATED 11/13/2021
FOR MADERA INDUSTRIAL WAREHOUSE BLDG. A, B, C, & D
AT 355 S. SCHNOOR AVE CONTRACT NO. 21016
IS DESIGNED TO DISCHARGE AT A RATE OF 20 GPM
(L/min) PER SQFT (m2) OF FLOOR AREA OVER A MAXIMUM AREA OF
1585.90
250.27 GPM (L/min) AT 47.761 PSI (bars) AT THE BASE OF THE RISER
HOSE STREAM ALLOWANCE OF 250 GPM (L/min)
IS INCLUDED IN THE ABOVE.
OCCUPANCY CLASSIFICATION S1 / B - SPRINKLERED
COMMODITY CLASSIFICATION CLASS I - IV
MAXIMUM STORAGE HEIGHT 12'-0 FT.
MAX. COVERAGE PER HEAD 121.88 SQ. FT.
INSTALLED BY SAN JOAQUIN FIRE PROTECTION, INC.

PROJECT DATA:

1. Project Address - 325, 345, 335, & 355 S. Schnoor Ave.
2. Occupancy Group - S1 / B Sprinklered
3. Square Footage of Buildings
   Building "A" - 325 S. Schnoor Ave., 37,500 S.F.
   Building "B" - 345 S. Schnoor Ave. 37,500 S.F.
   Building "C" - 335 S. Schnoor Ave. 35,100 S.F.
   Building "D" - 355 S. Schnoor Ave. 35,100 S.F.
   Total S.F. 145,200 S.F.
4. Construction Type - II-B Sprinklered
5. Number of Stories - 1
6. Code Edition N.F.P.A. #13, 2016 Edition
7. Hazard Group - Ordinary Hazard
8. A.P.N. No.

GENERAL NOTES

1. ALL INSTALLATION SHALL BE PER N.F.P.A. 13, 2016 EDITION.
2. ALL MATERIALS & INSTALLATIONS OF THIS AUTOMATIC FIRE SPRINKLER SYSTEM TO CONFORM TO N.F.P.A. & BE APPROVED BY THE LOCAL FIRE PREVENTION HAVING AUTHORITY.
3. EARTHQUAKE BRACING TO BE PER N.F.P.A. STANDARD.
4. PROVIDE SPARE HEAD CABINET WITH SPARE HEADS AND WRENCH.
5. LOW POINTS SHALL HAVE PROVISIONS FOR PROPER DRAINAGE.
6. SYSTEM SHALL BE HYDROSTATIC TESTED @ 200 P.S.I. FOR 2 HOURS.
7. PIPE SIZING PER: HYDRAULIC CALCULATIONS.
8. FIRE DEPT CONNECTION SHALL BE COMPATIBLE WITH LOCAL FIRE DEPARTMENT.
9. THREADED PIPING USED 1" TO 2" TO BE EDDY THREAD STEEL WITH THREADED ENDS & DUCTILE OR CAST FITTINGS.
10. WELDED PIPING USED TO BE EDDY FLOW WITH GROOVED ENDS.
11. INSTALL PROPER SIGNAGE AS REQUIRED BY N.F.P.A. 13.
12. OUTSIDE BELL TO HAVE 911 EMERGENCY SIGN.
13. 24 HOUR SUPERVISION TO BE PROVIDED BY OTHERS.
14. ALL ELECTRICAL WORK BY OTHERS.
15. FIRE ALARMS AND MANUAL PULL STATIONS BY OTHERS. FIRE ALARM DRAWINGS SHALL BE BY OTHERS.
16. ALL PAINTING BY OTHERS.
17. UNDERGROUND SHALL BE FLUSHED BY THE INSTALLING CONTRACTOR AND WRITTEN DOCUMENTATION PRIER TO CONNECTION TO OVERHEAD SYSTEM.
18. ALL ARM-OVERS TO BE 1" UNLESS NOTED OTHERWISE.
19. STORAGE LIMITED TO 12 FEET WITH MINIMUM 18 INCHES FROM PENDENT SPRINKLER DEFLECTOR TO TOP OF STORAGE. (SEE PART3 WAREHOUSE DESIGN CRITERIA).
20. IT IS THE CONTRACTOR'S RESPONSIBILITY TO MAKE WORK AVAILABLE FOR INSPECTIONS.
21. A COPY OF THE PERMANENT AND DURABLE GENERAL INFORMATION SIGN TO BE DISPLAYED PER NFPA 13, SECTION 25.6 OR A NOTE AS FOLLOWS: "A PERMANENT AND DURABLE GENERAL INFORMATION SIGN PER NFPA 13, SECTION 25.6 SHALL BE INSTALLED IN ADDITION TO THE HYDRAULIC DESIGN INFORMATION SIGN".
22. AN APPROVED PLAN SET SHALL BE ON SITE DURING ANY FIRE DEPARTMENT INSPECTION.
23. MECHANICAL TEES TEES SHALL HAVE COUPON HUNG WITHIN SIX INCHES OF TEE.
24. TRAPPED WATER: NFPA 13 2019 EDITION, 8.16.3.5.2.3 LESS THAN 5 GAL.
    (3) WHERE FLEXABLE COUPLINGS OR OTHER EASILY SEPERATED CONNECTIONS ARE USED A NIPPLE AND CAP OR PLUG SHALL BE OMITTED.
    THE TAIL BACKS ON THIS PROJECT HAS 3.69 GALLONS TRAPPED.

UNDERGROUND NOTES

UNDERGROUND PIPING BY UNDERGROUND CONTRACTOR AND NOT PART OF THIS SUBMITTAL. ALL UNDERGROUND SHOWN ON THIS PLAN IS FOR REFERENCE ONLY.

1. ALL MATERIALS & INSTALLATIONS TO BE U.L. LISTED & SHALL CONFIRM TO NFPA PAMPLETS 13 & 24 2016 EDITION
2. THRUST BLOCKS TO CONFIRM TO NFPA 24.
3. ALL WATER LINES FOR FIRE SPRINKLER SYSTEM SHALL BE TESTED AT 200 P.S.I. FOR 2 HRS. MINIMUM.
4. DUCTILE IRON PIPE SHALL BE USED WHEN PIPE PASSES UNDER BUILDING FOUNDATION, UNDER FOOTING.
5. PLASTIC PIPE SHALL BE C-900 DR-18/CLASS 150.
6. UNDERGROUND SHALL BE FLUSHED PER NFPA 24 BEFORE CONNECTING TO OVERHEAD FIRE SPRINKLER SYSTEM PIPING.
7. NOT USED

RISER KEY NOTES:

1. 6" FIRE LINE STUB-UP
2. 2" ANNULAR CLEARANCE
3. ASPHALT
4. 6 X 4 RED. WELD FLANGE FLG.
5. 4" FLEX COUPLING
6. MAIN DRAIN BRACE
7. 4" GRV. BUTTERFLY VALVE W/TAMPER SWITCH
8. 4" GRV. ~~SHOT GUN CHECK VALVE ASSY.~~ (TO PREVENT FDC BACK FLOW)
9. PSI GAUGE ASSY.
10. ¼" RELIEF VALVE
11. 2" MAIN DRAIN VALVE
12. 4" FDC LINE
13. 4" FLOW SWITCH
14. ELECT. BELL
15. 4-WAY BRACE. (ATTACHED TO Z-PURLIN INSIDE OF BUILDING)
16. SPARE HEAD BOX (IN RISER ROOM)
17. 4" FDC LINE (UNDERGROUND PLAN)
18. 4" WELD FLANGE
19. 4" GRV. CHECK VALVE (FDC LINE)

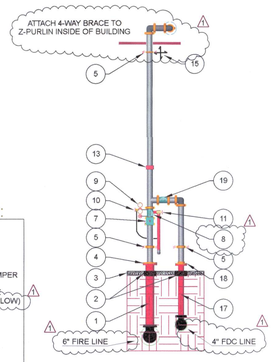

RISER DETAIL

SCALE 1/4" = 1'-0

SHEET INDEX

SHEET	DISCRIPTION
FP-1	GENERAL NOTES, RISER, HANGER AND BRACING DETAILS
FP-2	SITE, UNDERGROUND PIPING & CROOS SECTION PLAN
FP-3	BLDG. A PIPING PLAN
FP-4	BLDG. B PIPING PLAN
FP-5	BLDG. C PIPING PLAN
FP-6	BLDG. D PIPING PLAN

KEY PLAN
N.T.S.

LICENSED FIRE PROTECTION CONTRACTOR
SAN JOAQUIN FIRE PROTECTION
CLASSIFICATION(S)
C-16
LICENSE No. 775461
FRESNO, CA
STATE OF CALIFORNIA

FOR FIRE DEPT USE ONLY:

2019CBC
City of Madera
Building Department
The approval of these plans does not prevent the City of Madera from requiring correction of errors or omissions in the plans, specifications or construction. Subject to field inspections and approval of Codes and Ordinances.
APPROVED
By:
Date: JAN 05 2022

2019CBC 2019CBC

JOB COPY

THESE DRAWINGS, SPECIFICATIONS, THE IDEAS, DESIGNS, AND ARRANGEMENTS REPRESENTED THEREBY ARE AND SHALL REMAIN THE PROPERTY OF SAN JOAQUIN FIRE PROTECTION, INC. AND NO PART THEREOF SHALL BE COPIED, DISCLOSED TO OTHERS, OR USED IN CONNECTION WITH ANY OTHER WORK OR PROJECT OTHER THAN THE SPECIFIC PROJECT FOR WHICH THEY HAVE BEEN PREPARED AND DEVELOPED WITHOUT THE WRITTEN CONSENT OF SAN JOAQUIN FIRE PROTECTION, INC. VISUAL CONTACT WITH THESE DRAWINGS OR SPECIFICATIONS SHALL CONSTITUE CONCLUSIVE EVIDENCE OF THESE RESTRICTIONS.

Revisions

1	12/03/21	FIRE DEPT. COMMENTS

Symbols

Hanger Location
Lateral Brace
Longitudinal Brace
Four Way Brace
Hydraulic Refs. Points
Thrust Block

Symbols

Backflow Preventer
Key Operated Valve
Post Indicator Valve
Check Valve
Fire Dept. Connection
Hose Valve
Hose Station

Sprinkler Head Symbols

Pendent on Drop
Pendent on Drop w/401 Escutcheon
Upright & Pendent on 1" Tee
Upright on Outlet
Upright on Tee or Cross With 1" Plug
Upright on Sprig Up With Tee & 1" Plug
Upright on Sprig Up
Sidewall on Outlet

Sprinkler Head Type & Count

Sym.	Quantity	Manufacturer	Model	Response	K-Factor	Orifice Size	Type	Temp.	Finish	Escutcheon / Finish
	.									
	.									
	.									
	.									
	.			NO SPRINKLERS THIS SHEET						
	.									
	.									
Total:	.									

SAN JOAQUIN FIRE PROTECTION, INC.
5957 E. HARVARD AVE. FRESNO, CA. 93727
PH. (559) 292-7111 FAX (559) 292-7211 CA. LIC. 775461

DESCRIPTION: GENERAL NOTES, RISER, HANGER AND BRACING DETAILS

Job No.	21016
Date	11/13/2021
Engr.	GREG S.
Scale	1/8" = 1'-0"

MADERA INDUSTRIAL
325, 335, 345, & 355 S, SCHNOOR AVE.
MADERA, CA. 93637

FP-1
OF 6 SHEET

BOLLARD PROT.

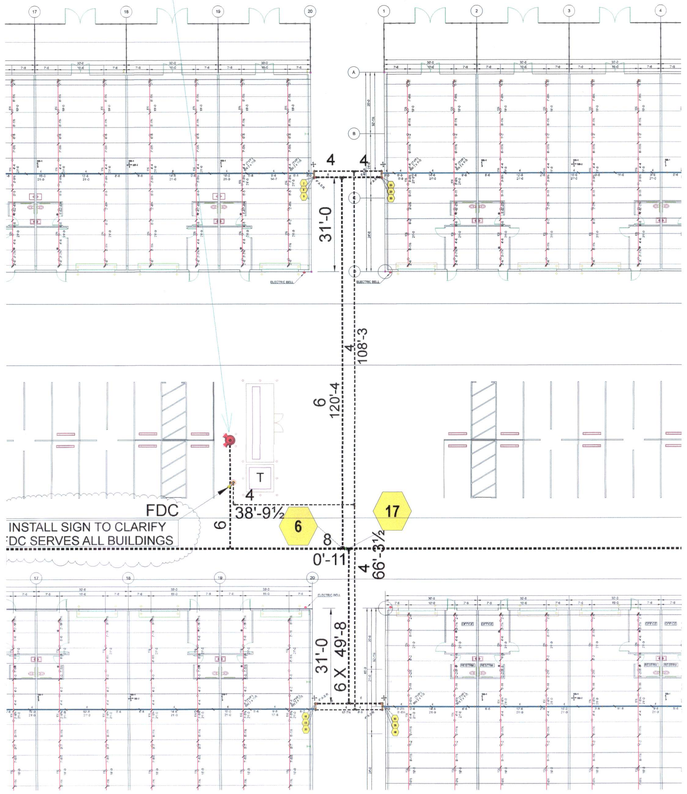

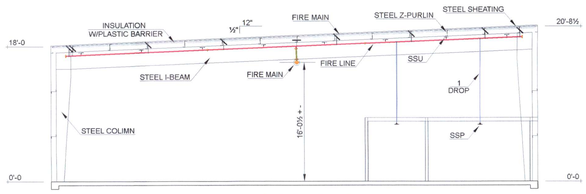

A CROSS SECTION

SCALE 1/8" = 1'-0

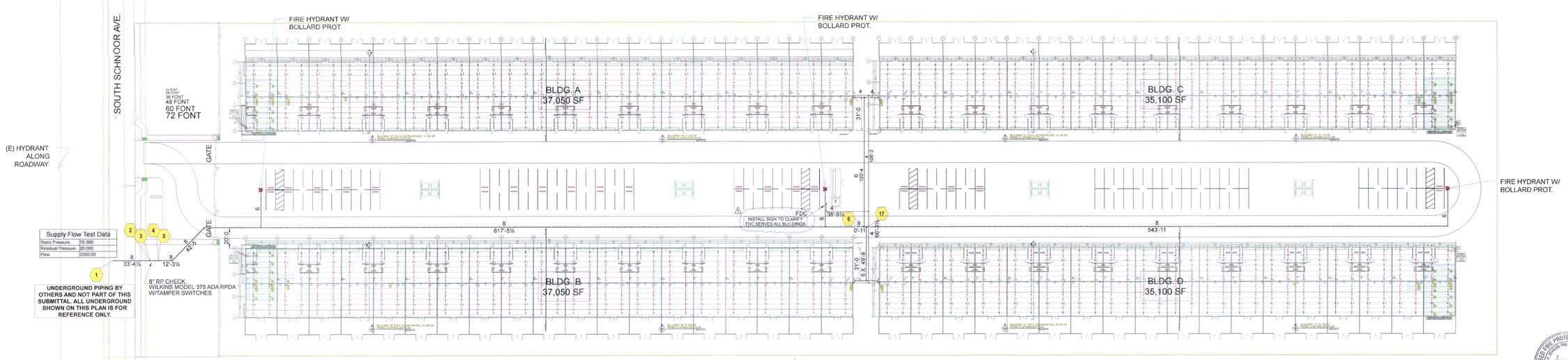

SITE PLAN

SCALE 1" = 40'-0

LICENSED FIRE PROTECTION CONTRACTOR
CLASSIFICATION: C-16
LICENSE No. 775461
STATE OF CALIFORNIA

FOR FIRE DEPT USE ONLY:

2019CBC
City of Madera
Building Department
The approval of these plans does not prevent the City of Madera from requiring correction of errors or omissions in the plans, specifications or construction. Subject to field inspections and approval of all Codes and Ordinances
APPROVED
By: GX
Date: JAN 05 2022

THESE DRAWINGS, SPECIFICATIONS, THE IDEAS, DESIGNS, AND ARRANGEMENTS REPRESENTED THEREBY ARE AND SHALL REMAIN THE PROPERTY OF SAN JOAQUIN FIRE PROTECTION, INC. AND NO PART THEREOF SHALL BE COPIED, DISCLOSED TO OTHERS, OR USED IN CONNECTION WITH ANY OTHER WORK OR PROJECT OTHER THAN THE SPECIFIC PROJECT FOR WHICH THEY HAVE BEEN PREPARED AND DEVELOPED WITHOUT THE WRITTEN CONSENT OF SAN JOAQUIN FIRE PROTECTION, INC. VISUAL CONTACT WITH THESE DRAWINGS OR SPECIFICATIONS SHALL CONSTITUE CONCLUSIVE EVIDENCE OF THESE RESTRICTIONS.

Revisions

1	12/03/21	FIRE DEPT. COMMENTS

Symbols

- Hanger Location
- Lateral Brace
- Longitudinal Brace
- Four Way Brace
- Hydraulic Refs. Points
- Thrust Block

Symbols

- Backflow Preventer
- Key Operated Valve
- Post Indicator Valve
- Check Valve
- Fire Dept. Connection
- Hose Valve
- Hose Station

Sprinkler Head Symbols

- Pendent on Drop
- Pendent on Drop w/401 Escutcheon
- Upright & Pendent on 1" Tee
- Upright on Outlet
- Upright on Tee or Cross With 1" Plug
- Upright on Sprig Up With Tee & 1" Plug
- Upright on Sprig Up
- Sidewall on Outlet

Sprinkler Head Type & Count

Sym.	Quantity	Manufacturer	Model	Response	K-Factor	Orifice Size	Type	Temp.	Finish	Escutcheon / Finish
	.									
	.									
	.									
	.			NO SPRINKLERS THIS SHEET						
	.									
	.									
Total:	.									

SAN JOAQUIN FIRE PROTECTION, INC.
5957 E. HARVARD AVE. FRESNO, CA. 93727
PH. (559) 292-7111 FAX (559) 292-7211 CA. LIC. 775461

DESCRIPTION: SITE, UNDERGROUND PIPING & CROSS SECTION PLAN

Job No.	21016
Date	11/13/2021
Engr.	GREG S.
Scale	SEE PLAN

MADERA INDUSTRIAL
325, 335, 345, & 355 S. SCHNOOR AVE.
MADERA, CA. 93637

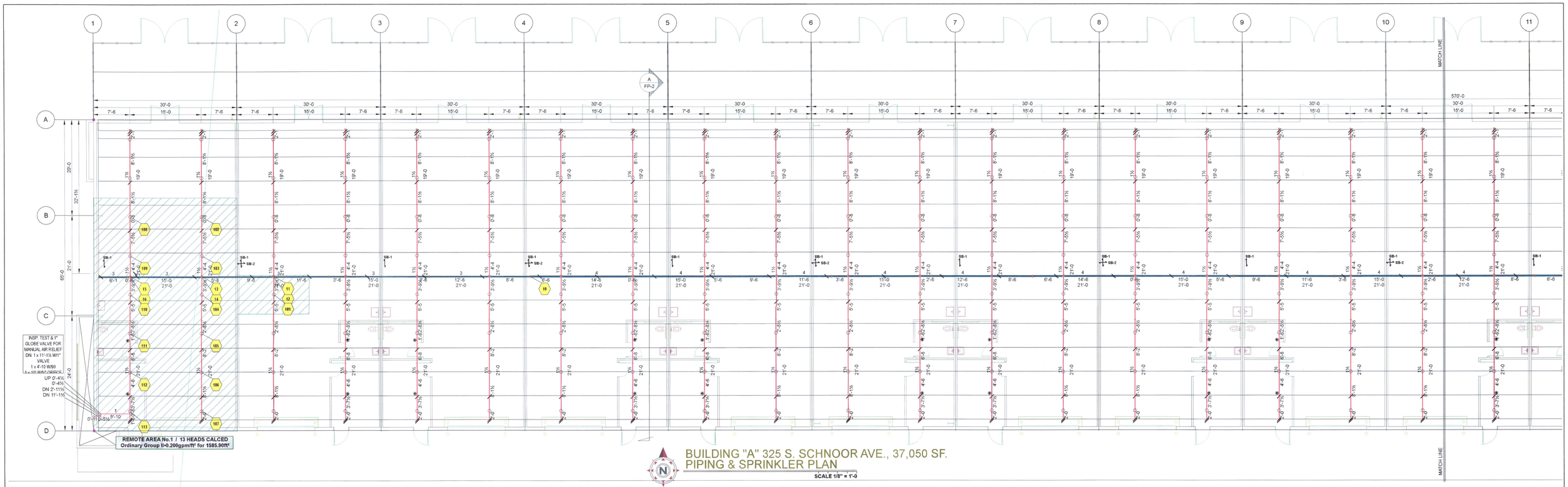

BUILDING "A" 325 S. SCHNOOR AVE., 37,050 SF.
PIPING & SPRINKLER PLAN

SCALE 1/8" = 1'-0

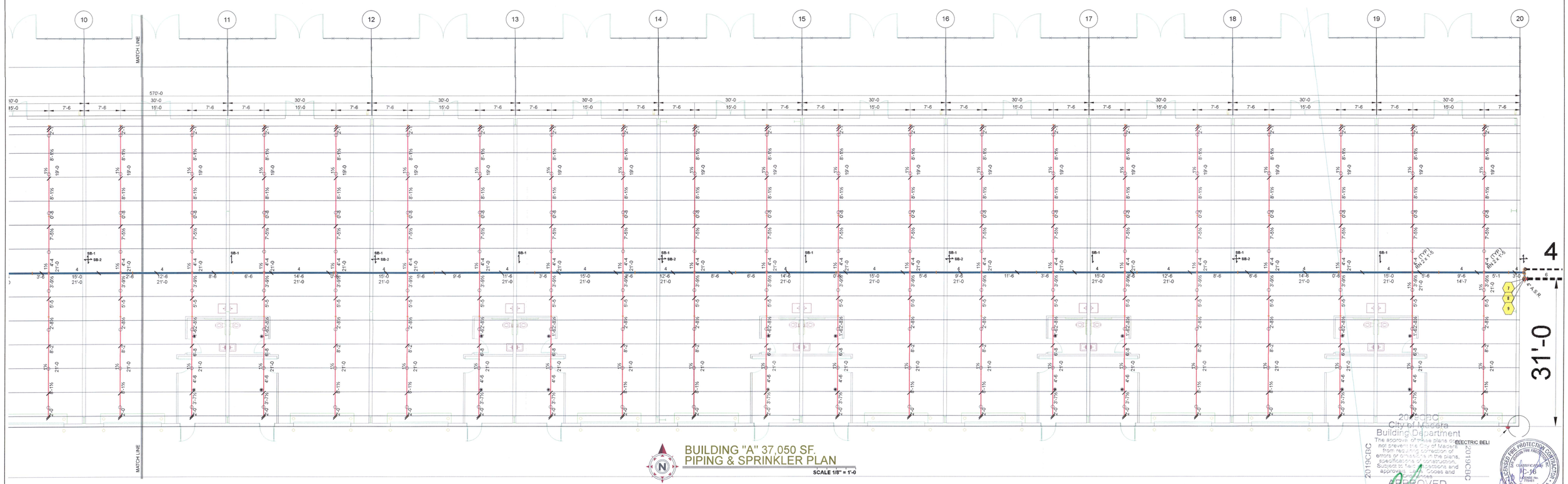

BUILDING "A" 37,050 SF.
PIPING & SPRINKLER PLAN

SCALE 1/8" = 1'-0

2019CBC
City of Madera
Building Department
The approval of these plans and specifications does not prevent the City of Madera from requiring the correction of errors or omissions in the plans, specifications or construction. Subject to field inspections and approval of all applicable Codes and Ordinances.
APPROVED
By:
Date: JAN 05 2022

ELECTRIC BELL

THESE DRAWINGS, SPECIFICATIONS, THE IDEAS, DESIGNS, AND ARRANGEMENTS REPRESENTED THEREBY ARE AND SHALL REMAIN THE PROPERTY OF SAN JOAQUIN FIRE PROTECTION, INC. AND NO PART THEREOF SHALL BE COPIED, DISCLOSED TO OTHERS, OR USED IN CONNECTION WITH ANY OTHER WORK OR PROJECT OTHER THAN THE SPECIFIC PROJECT FOR WHICH THEY HAVE BEEN PREPARED AND DEVELOPED WITHOUT THE WRITTEN CONSENT OF SAN JOAQUIN FIRE PROTECTION, INC. VISUAL CONTACT WITH THESE DRAWINGS OR SPECIFICATIONS SHALL CONSTITUE CONCLUSIVE EVIDENCE OF THESE RESTRICTIONS.

Revisions

1	12/03/21 FIRE DEPT. COMMENTS

Symbols

- Hanger Location
- Lateral Brace
- Longitudinal Brace
- Four Way Brace
- Hydraulic Refs. Points
- Thrust Block

Symbols

- Backflow Preventer
- Key Operated Valve
- Post Indicator Valve
- Check Valve
- Fire Dept. Connection
- Hose Valve
- Hose Station

Sprinkler Head Symbols

- Pendent on Drop
- Pendent on Drop w/401 Escutcheon
- Upright & Pendent on 1" Tee
- Upright on Outlet
- Upright on Tee or Cross With 1" Plug
- Upright on Sprig Up With Tee & 1" Plug
- Upright on Sprig Up
- Sidewall on Outlet

Sprinkler Head Type & Count

Sym.	Quantity	Manufacturer	Model	Response	K-Factor	Orifice Size	Type	Temp.	Finish	Escutcheon / Finish
○	304	VICTAULIC	V3401	Standard	8.0	3/4"	Upright	200°F	Brass	None
◉	38	VICTAULIC	V3405	Standard	8.0	3/4"	Pendent	155°F	Chrome	401 Adjustable / Chrome
	.									
	.									
	.									
	.									
Total:	342									

SAN JOAQUIN FIRE PROTECTION, INC.
5957 E. HARVARD AVE. FRESNO, CA. 93727
PH. (559) 292-7111 FAX (559) 292-7211 CA. LIC. 775461

DESCRIPTION: BUILDING "A" SPRINKLER PIPING, & CALCULATION PLAN

Job No.	21016
Date	11/13/2021
Engr.	GREG S.
Scale	1/8" = 1'-0"

MADERA INDUSTRIAL
325, 335, 345, & 355 S, SCHNOOR AVE.
MADERA, CA. 93637

FP-3
OF 6 SHEET

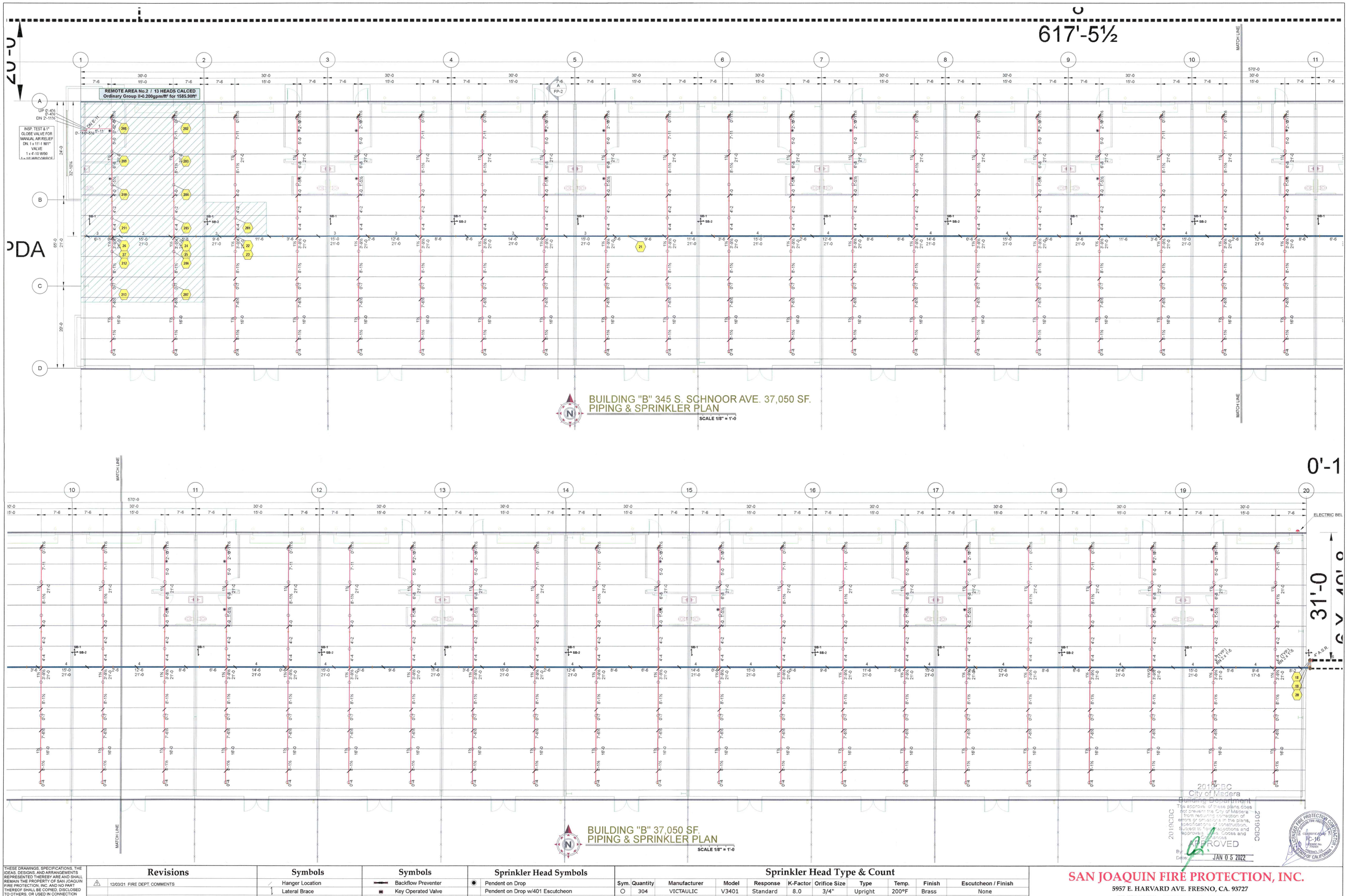

THESE DRAWINGS, SPECIFICATIONS, THE IDEAS, DESIGNS, AND ARRANGEMENTS REPRESENTED THEREBY ARE AND SHALL REMAIN THE PROPERTY OF SAN JOAQUIN FIRE PROTECTION, INC. AND NO PART THEREOF SHALL BE COPIED, DISCLOSED TO OTHERS, OR USED IN CONNECTION WITH ANY OTHER WORK OR PROJECT OTHER THAN THE SPECIFIC PROJECT FOR WHICH THEY HAVE BEEN PREPARED AND DEVELOPED WITHOUT THE WRITTEN CONSENT OF SAN JOAQUIN FIRE PROTECTION, INC. VISUAL CONTACT WITH THESE DRAWINGS OR SPECIFICATIONS SHALL CONSTITUE CONCLUSIVE EVIDENCE OF THESE RESTRICTIONS.

Revisions

1	12/03/21 FIRE DEPT. COMMENTS

Symbols

- Hanger Location
- Lateral Brace
- Longitudinal Brace
- Four Way Brace
- Hydraulic Refs. Points
- Thrust Block

Symbols

- Backflow Preventer
- Key Operated Valve
- Post Indicator Valve
- Check Valve
- Fire Dept. Connection
- Hose Valve
- Hose Station

Sprinkler Head Symbols

- Pendent on Drop
- Pendent on Drop w/401 Escutcheon
- Upright & Pendent on 1" Tee
- Upright on Outlet
- Upright on Tee or Cross With 1" Plug
- Upright on Sprig Up With Tee & 1" Plug
- Upright on Sprig Up
- Sidewall on Outlet

Sprinkler Head Type & Count

Sym.	Quantity	Manufacturer	Model	Response	K-Factor	Orifice Size	Type	Temp.	Finish	Escutcheon / Finish
○	304	VICTAULIC	V3401	Standard	8.0	3/4"	Upright	200°F	Brass	None
◉	38	VICTAULIC	V3405	Standard	8.0	3/4"	Pendent	155°F	Chrome	401 Adjustable / Chrome
	.									
	.									
	.									
	.									
Total:	342									

2019CBC
City of Madera
Building Department
The approval of these plans does not prevent the City of Madera from requiring correction of errors or omissions in the plans, specifications or construction. Subject to field inspections and approvals. Codes and Ordinances.
APPROVED
By:
Date: JAN 05 2022

SAN JOAQUIN FIRE PROTECTION, INC.
5957 E. HARVARD AVE. FRESNO, CA. 93727
PH. (559) 292-7111 FAX (559) 292-7211 CA. LIC. 775461

DISCRIPTION: BUILDING "B" SPRINKLER PIPING, & CALCULATION PLAN

Job No.	21016
Date	11/13/2021
Engr.	GREG S.
Scale	1/8" = 1'-0"

MADERA INDUSTRIAL
325, 335, 345, & 355 S, SCHNOOR AVE.
MADERA, CA. 93637

FP-4
OF 6 SHEET

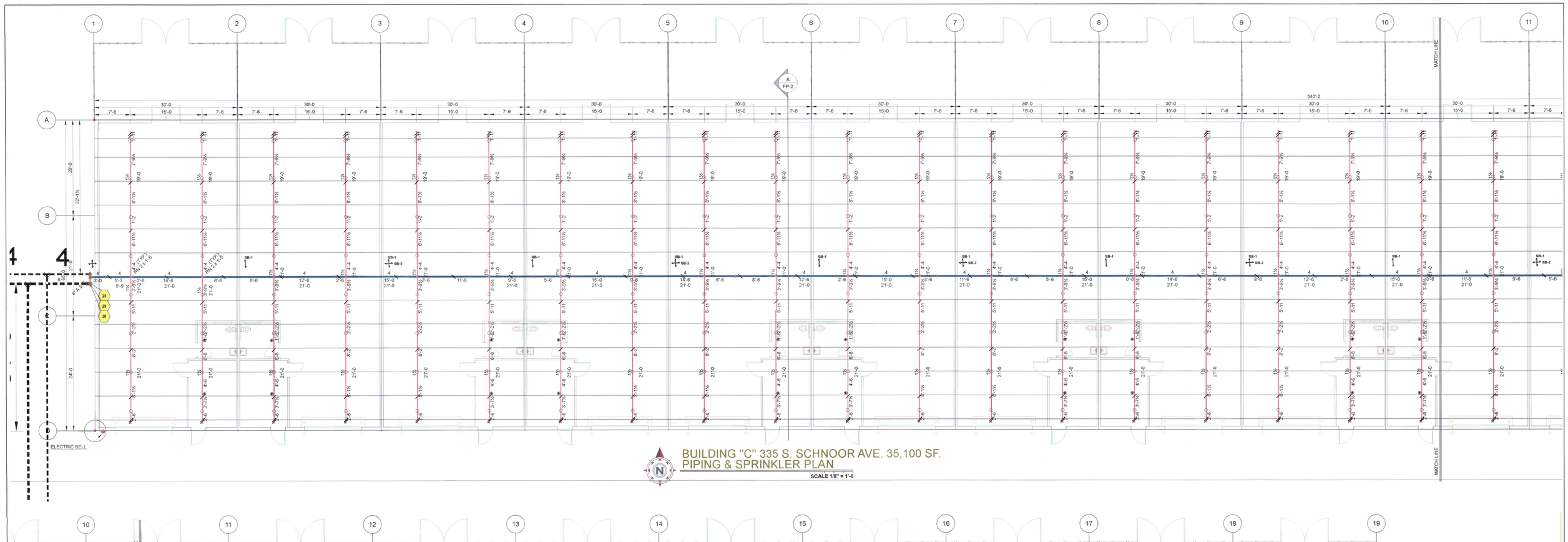

BUILDING "C" 335 S. SCHNOOR AVE. 35,100 SF.
PIPING & SPRINKLER PLAN
SCALE 1/8" = 1'-0"

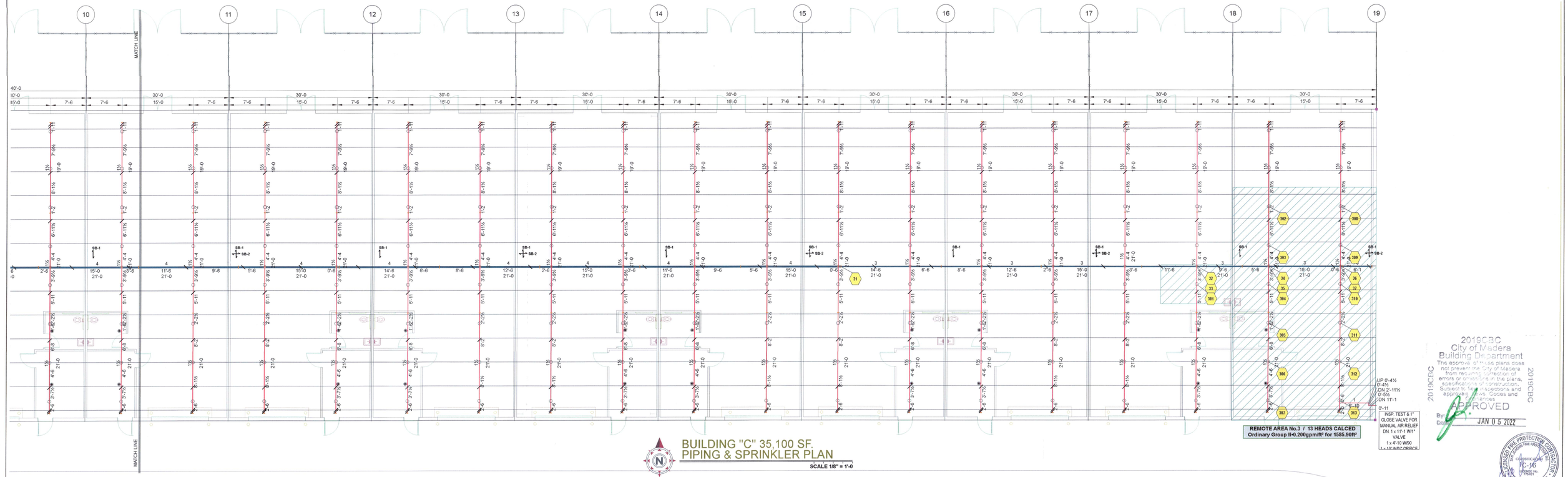

BUILDING "C" 35,100 SF.
PIPING & SPRINKLER PLAN
SCALE 1/8" = 1'-0"

2019CBC
City of Madera
Building Department
The approval of these plans does not prevent the City of Madera from requiring correction of errors or omissions in the plans, specifications or construction. Subject to field inspections and approval of all Codes and Ordinances.
APPROVED
By:
Date: JAN 05 2022

THESE DRAWINGS, SPECIFICATIONS, THE IDEAS, DESIGNS, AND ARRANGEMENTS REPRESENTED THEREBY ARE AND SHALL REMAIN THE PROPERTY OF SAN JOAQUIN FIRE PROTECTION, INC. AND NO PART THEREOF SHALL BE COPIED, DISCLOSED TO OTHERS, OR USED IN CONNECTION WITH ANY OTHER WORK OR PROJECT OTHER THAN THE SPECIFIC PROJECT FOR WHICH THEY HAVE BEEN PREPARED AND DEVELOPED WITHOUT THE WRITTEN CONSENT OF SAN JOAQUIN FIRE PROTECTION, INC. VISUAL CONTACT WITH THESE DRAWINGS OR SPECIFICATIONS SHALL CONSTITUE CONCLUSIVE EVIDENCE OF THESE RESTRICTIONS.

Revisions

1	12/03/21 FIRE DEPT. COMMENTS

Symbols

- Hanger Location
- Lateral Brace
- Longitudinal Brace
- Four Way Brace
- Hydraulic Refs. Points
- Thrust Block
- Backflow Preventer
- Key Operated Valve
- Post Indicator Valve
- Check Valve
- Fire Dept. Connection
- Hose Valve
- Hose Station

Sprinkler Head Symbols

- Pendent on Drop
- Pendent on Drop w/401 Escutcheon
- Upright & Pendent on 1" Tee
- Upright on Outlet
- Upright on Tee or Cross With 1" Plug
- Upright on Sprig Up With Tee & 1" Plug
- Upright on Sprig Up
- Sidewall on Outlet

Sprinkler Head Type & Count

Sym.	Quantity	Manufacturer	Model	Response	K-Factor	Orifice Size	Type	Temp.	Finish	Escutcheon / Finish
○	288	VICTAULIC	V3401	Standard	8.0	3/4"	Upright	200°F	Brass	None
◉	36	VICTAULIC	V3405	Standard	8.0	3/4"	Pendent	155°F	Chrome	401 Adjustable / Chrome
	.									
	.									
	.									
	.									
Total:	324									

SAN JOAQUIN FIRE PROTECTION, INC.
5957 E. HARVARD AVE. FRESNO, CA. 93727
PH. (559) 292-7111 FAX (559) 292-7211 CA. LIC. 775461

DISCRIPTION: BUILDING "C" SPRINKLER PIPING, & CALCULATION PLAN

Job No.	21016
Date	11/13/2021
Engr.	GREG S.
Scale	1/8" = 1'-0"

MADERA INDUSTRIAL
325, 335, 345, & 355 S, SCHNOOR AVE.
MADERA, CA. 93637

FP-5
OF 6 SHEET

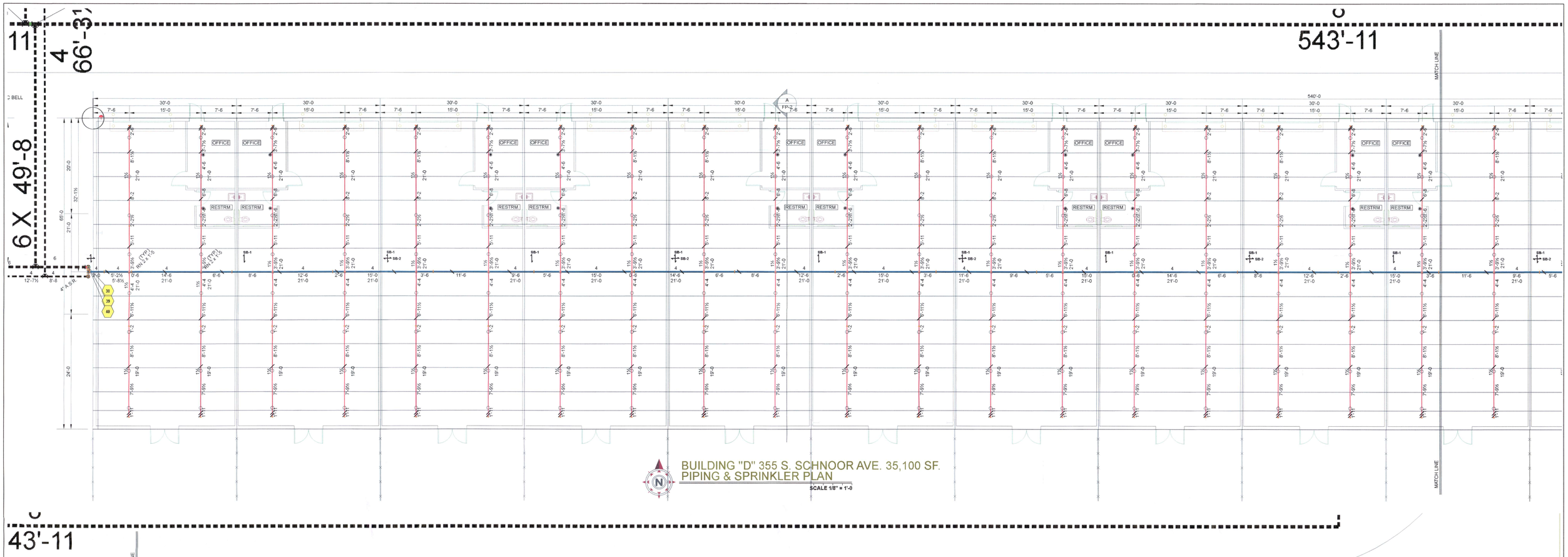

BUILDING "D" 355 S. SCHNOOR AVE. 35,100 SF.
PIPING & SPRINKLER PLAN

SCALE 1/8" = 1'-0

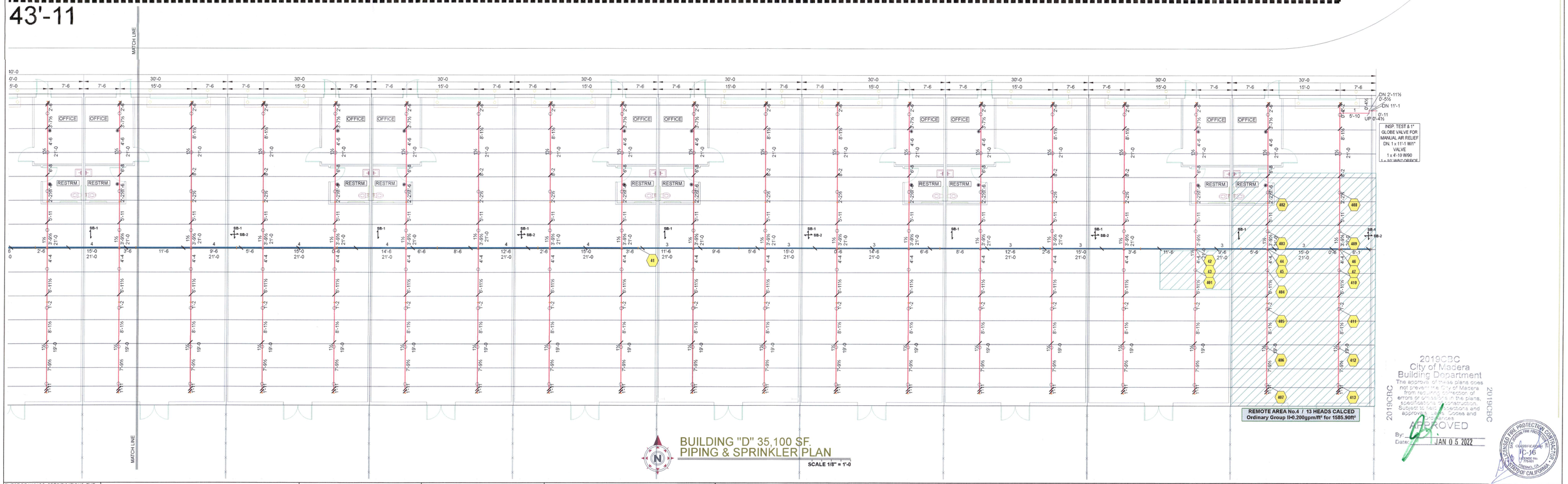

BUILDING "D" 35,100 SF.
PIPING & SPRINKLER PLAN

SCALE 1/8" = 1'-0

2019CBC
City of Madera
Building Department
The approval of these plans does not prevent the City of Madera from requiring correction of errors or omissions in the plans, specifications or construction. Subject to field inspections and approval of all codes and ordinances
APPROVED
By:
Date: JAN 05 2022

THESE DRAWINGS, SPECIFICATIONS, THE IDEAS, DESIGNS, AND ARRANGEMENTS REPRESENTED THEREBY ARE AND SHALL REMAIN THE PROPERTY OF SAN JOAQUIN FIRE PROTECTION, INC. AND NO PART THEREOF SHALL BE COPIED, DISCLOSED TO OTHERS, OR USED IN CONNECTION WITH ANY OTHER WORK OR PROJECT OTHER THAN THE SPECIFIC PROJECT FOR WHICH THEY HAVE BEEN PREPARED AND DEVELOPED WITHOUT THE WRITTEN CONSENT OF SAN JOAQUIN FIRE PROTECTION, INC. VISUAL CONTACT WITH THESE DRAWINGS OR SPECIFICATIONS SHALL CONSTITUE CONCLUSIVE EVIDENCE OF THESE RESTRICTIONS.

Revisions

1	12/03/21 FIRE DEPT. COMMENTS

Symbols

- Hanger Location
- Lateral Brace
- Longitudinal Brace
- Four Way Brace
- Hydraulic Refs. Points
- Thrust Block

Symbols

- Backflow Preventer
- Key Operated Valve
- Post Indicator Valve
- Check Valve
- Fire Dept. Connection
- Hose Valve
- Hose Station

Sprinkler Head Symbols

- Pendent on Drop
- Pendent on Drop w/401 Escutcheon
- Upright & Pendent on 1" Tee
- Upright on Outlet
- Upright on Tee or Cross With 1" Plug
- Upright on Sprig Up With Tee & 1" Plug
- Upright on Sprig Up
- Sidewall on Outlet

Sprinkler Head Type & Count

Sym.	Quantity	Manufacturer	Model	Response	K-Factor	Orifice Size	Type	Temp.	Finish	Escutcheon / Finish
○	288	VICTAULIC	V3401	Standard	8.0	3/4"	Upright	200°F	Brass	None
◉	36	VICTAULIC	V3405	Standard	8.0	3/4"	Pendent	155°F	Chrome	401 Adjustable / Chrome
	.									
	.									
	.									
	.									
Total:	324									

SAN JOAQUIN FIRE PROTECTION, INC.
5957 E. HARVARD AVE. FRESNO, CA. 93727
PH. (559) 292-7111 FAX (559) 292-7211 CA. LIC. 775461

DISCRIPTION: BUILDING "D" SPRINKLER PIPING, & CALCULATION PLAN

Job No.	21016
Date	11/13/2021
Engr.	GREG S.
Scale	1/8" = 1'-0"

MADERA INDUSTRIAL
325, 335, 345, & 355 S, SCHNOOR AVE.
MADERA, CA. 93637

FP-6
OF 6 SHEET

VP BUILDINGS®
VARCO PRUDEN
a division of BlueScope Buildings North America, Inc.

DRAWING INDEX

DRAWING TITLE	PAGES
Cover Sheet	1
Codes and Loads	2
Notes	3
Anchor Rod Plan	4 - 5
Primary Structural	6 - 19
Secondary Structural	20 - 29
Covering	30 - 40
Special Drawings	
Standard Erection Details	
Planograph Details	41 - 45

DRAWING RELEASE HISTORY

TYPE	DATE	DESCRIPTION
Anchor Rod Drawings	7/9/2021	FOR CONSTRUCTION
Permit Drawings	7/9/2021	PERMIT SET- For Building Dept. Approval
Final Erection Drawings	9/16/2021	FOR CONSTRUCTION

BASIC ERECTION GUIDE 4001

BASIC PANELS AND ACCESSORIES ERECTION GUIDE 4003

RPR WALL PANEL ERECTION GUIDE 4030

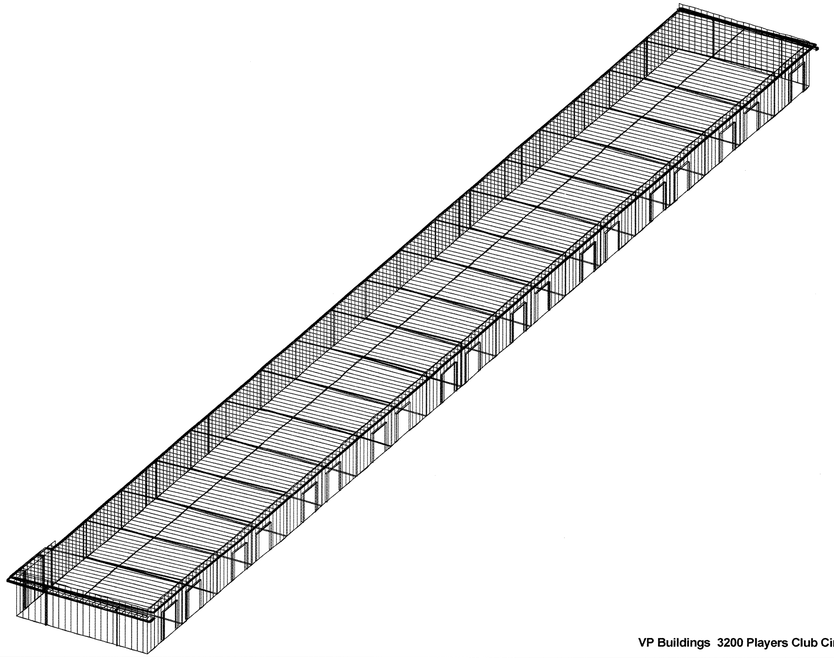

VP Buildings 3200 Players Club Circle Memphis TN 38125

GENERAL NOTES

MATERIALS

	ASTM DESIGNATION	
3 PLATE WELDED SECTIONS	A529, A572, A1011, A1018	GRADE 55
COLD FORMED LIGHT GAGE SHAPES	A653, A1011	GRADE 60
BRACE RODS	A572, A510	GRADE 50
HOT ROLLED MILL SHAPES	A36, A529, A572, A588, A992	GRADE 36 OR 50
HOT ROLLED ANGLES	A529, A572, A588, A992	GRADE 50
HOLLOW STRUCTURAL SECTION (HSS)	A500	GRADE B
CLADDING	A653, A792	GRADE 50 OR GRADE 80

HIGH STRENGTH BOLT TIGHTENING REQUIREMENTS

IT IS THE RESPONSIBILITY OF THE ERECTOR TO ENSURE PROPER BOLT TIGHTNESS IN ACCORDANCE WITH APPLICABLE REGULATIONS. SEE RCSC SPECIFICATION FOR STRUCTURAL JOINTS USING HIGH STRENGTH BOLTS FOR MORE INFORMATION. SEE ERECTION GUIDE FOR BOLT TIGHTENING INSTRUCTIONS. THE FOLLOWING CRITERIA MAY BE USED TO DETERMINE THE BOLT TIGHTNESS (I.E.-SNUG TIGHT OR PRE-TENSION) UNLESS REQUIRED OTHERWISE BY LOCAL JURISDICTION OR CONTRACT.

ALL A490 BOLTS SHALL BE "PRE-TENSIONED". A325 BOLTS IN PRIMARY FRAMING AND BRACING CONNECTIONS MAY BE "SNUG-TIGHT" EXCEPT AS FOLLOWS;

PRE-TENSION A325 BOLTS IF BUILDING SUPPORTS A CRANE GREATER THAN 5 TON CAPACITY.

PRE-TENSION A325 BOLTS IF BUILDING SUPPORTS MACHINERY THAT CREATES VIBRATION, IMPACT, OR STRESS REVERSALS ON CONNECTIONS.

PRE-TENSION A325 BOLTS IF LOCATED IN HIGH SEISMIC AREAS. FOR IBC BASED CODES; HIGH SEISMIC IS DESIGN CATEGORY D, E OR F. SEE CODES AND LOADS SECTION BELOW FOR DETAILS.

PRE-TENSION ANY CONNECTION WITH DESIGNATION A325-SC. SLIP CRITICAL (SC) CONNECTIONS MUST BE FREE OF PAINT, OIL OR OTHER MATERIALS THAT REDUCE FRICTION AT CONTACT SURFACES. GALVANIZED OR LIGHTLY RUSTED SURFACES ARE ACCEPTABLE.

IN CANADA, ALL A325 AND A490 BOLTS SHALL BE "PRE-TENSIONED", EXCEPT FOR SECONDARY MEMBERS AND FLANGE BRACES.

SECONDARY MEMBERS AND FLANGE BRACE CONNECTIONS ARE ALWAYS "SNUG TIGHT", UNLESS INDICATED OTHERWISE IN ERECTION DRAWING DETAILS.

INSPECTION AND TESTING

SPECIAL INSPECTIONS AND TESTING REQUIRED BY AUTHORITY HAVING JURISDICTION (AHJ) DURING CONSTRUCTION AND/OR STEEL FABRICATION IS THE RESPONSIBILITY OF THE OWNER OR OWNERS AUTHORIZED AGENT. WHEN REQUIRED, THE OWNER SHALL EMPLOY A QUALITY ASSURANCE AGENCY (QAA) APPROVED BY THE AHJ. THE BUILDER IS RESPONSIBLE TO COORDINATE BETWEEN THE QAA FIRM AND BBNA FABRICATION FACILITIES. THE TYPE AND EXTENT OF SPECIAL INSPECTIONS AND NDT WELD TESTING MUST BE SPECIFICALLY STIPULATED IN CONTRACT DOCUMENTS OR BBNA WILL ASSUME SPECIAL INSPECTIONS AND/OR NDT TESTING ARE WAIVED AS PERMITTED BY THE BUILDING CODE BASED ON BBNA FACILITIES IAS AC472 ACCREDITATION.

2019CRC
City of Madera
Building Department
The approval of these plans does not prevent the City of Madera from requiring the correction of errors in these plans, in the plans, specifications, construction, or violations of the California Building Codes and other laws and ordinances.
APPROVED
By
Date MAR 03 2022

Keith Erick Fix electronically signs and seals this document with his Professional Engineer seal affixed. Printed copies of this document are not signed and sealed. This signature must be verified on an electronic copy.
2021.09.21 10:10:29-05'00'

REGISTERED PROFESSIONAL ENGINEER KEITH ERICK FIX C 61044 STATE OF CALIFORNIA

09/21/2021

JHW reviewed pages 1-47 FED 9/21/21

THE VP ENGINEER'S SEAL APPLIES ONLY TO THE WORK PRODUCT OF VP AND DESIGN AND PERFORMANCE REQUIREMENTS SPECIFIED BY VP. THE VP ENGINEER'S SEAL DOES NOT APPLY TO THE PERFORMANCE OR DESIGN OF ANY OTHER PRODUCT OR COMPONENT FURNISHED BY VP EXCEPT TO ANY DESIGN OR PERFORMANCE REQUIREMENTS SPECIFIED BY VP.

THIS DRAWING, INCLUDING THE INFORMATION HEREON, REMAINS THE PROPERTY OF VP BUILDINGS. IT IS PROVIDED SOLELY FOR ERECTING THE BUILDING DESCRIBED IN THE APPLICABLE PURCHASE ORDER AND MAY BE REPRODUCED ONLY FOR THAT PURPOSE. IT SHALL NOT BE MODIFIED, REPRODUCED OR USED FOR ANY OTHER PURPOSE WITHOUT PRIOR WRITTEN APPROVAL OF VP BUILDINGS.

THE GENERAL CONTRACTOR AND/OR ERECTOR IS SOLELY RESPONSIBLE FOR ACCURATE GOOD QUALITY WORKMANSHIP IN ERECTING THIS BUILDING IN ACCORDANCE WITH THIS DRAWING, DETAILS REFERENCED IN THIS DRAWING, ALL APPLICABLE VP BUILDINGS ERECTION GUIDES, AND INDUSTRY STANDARDS PERTAINING TO PROPER ERECTION, INCLUDING THE CORRECT USE OF TEMPORARY BRACING.

CAN/CSA A660 QUASAR Certified

IAS ACCREDITED Metal Building Systems AC 472

D

COVER SHEET

BUILDER	DBKO Design + Build
CUSTOMER	Madera WH Building A
LOCATION	Madera, California
PROJECT	MT 1 Building A
BUILDERS PO#	
FILENAME	MT 1

VP BUILDINGS VARCO PRUDEN

VPC VERSION: 2021.2c

a division of BlueScope Buildings North America, Inc.

JOBNO	21-008734-01
DATE	9/16/2021
DRAWN / CHECK	ADP ADP
PAGE	1

Codes and Loads
WHEN MULTIPLE BUILDINGS ARE INVOLVED, SPECIFIC LOAD FACTORS FOR DIFFERING OCCUPANCIES, BUILDING DIMENSIONS, HEIGHTS, FRAMING SYSTEMS, ROOF SLOPES, ETC., MAY RESULT IN DIFFERENT LOAD APPLICATION FACTORS THAN INDICATED BELOW. SEE CALCULATIONS FOR FURTHER DETAILS. WIND LOADS ARE APPLIED TO OVERALL BUILDING ENVELOPE. COMMON WALLS BETWEEN CONNECTED SHAPES ARE NOT SUBJECT TO EXTERNAL WIND LOADS.

City: Madera County: Madera State: California Country: United States

Building Code
Building Code: 2019 California Building Code Structural: 16AISC - ASD Rainfall: I: 3.00 inches per hour

Based on Building Code: 2018 International Building Code Cold Form: 16AISI - ASD f'c: 3000.00 psi Concrete

Building Risk/Occupancy Category: II (Standard Occupancy Structure)

Dead and Collateral Loads
Collateral Gravity:5.00 psf
Collateral Uplift: 0.00 psf

Wind Load
Wind Speed: Vult: 94.00 (Vasd: 72.81) mph
The 'Envelope Procedure' is Used
Primaries Wind Exposure: C - Kz: 0.892
Parts Wind Exposure Factor: 0.892
Wind Enclosure: Enclosed
Topographic Factor: Kzt: 1.0000
Ground Elevation Factor: Ke: 0.9908

NOT Windborne Debris Region
Base Elevation: 0/0/0
Site Elevation: 256.0 ft
Primary Zone Strip Width: 2a: 13/0/0
Parts / Portions Zone Strip Width:
Walls, a: 6/6/0
Roof(s), 0.6h: 11/4/13
Basic Wind Pressure: q: 17.00, (Parts) 17.00 psf

Material Dead Weight
Roof Covering + Second. Dead Load: 2.20 psf
Frame Weight (assumed for seismic):2.50 psf

Snow Load
Ground Snow Load: pg: 0.00 psf
Flat Roof Snow: pf: 0.00 psf
Design Snow (Sloped): ps: 0.00 psf
Rain Surcharge: 0.00
Exposure Factor: 2 Partially Exposed - Ce: 1.00
Snow Importance: Is: 1.000
Thermal Factor: Heated - Ct: 1.00
Ground / Roof Conversion: 0.70
Obstructed or Not Slippery

Roof Live Load
Roof Live Load: 20.00 psf Reducible

Seismic Load
Lateral Force Resisting Systems using Equivalent Force Procedure
Mapped MCE Acceleration: Ss: 60.90 %g
Mapped MCE Acceleration: S1: 23.70 %g
Site Class: Stiff soil (D) - Default
Seismic Importance: Ie: 1.000
Design Acceleration Parameter: Sds: 0.5330
Design Acceleration Parameter: Sd1: 0.3359
Seismic Design Category: D
Seismic Snow Load: 0.00 psf
% Snow Used in Seismic: 0.00
Diaphragm Condition: Rigid
Fundamental Period Height Used: 20/4/4

Transverse Direction Parameters
Ordinary Steel Moment Frames
Redundancy Factor: Rho: 1.30 - USR
Fundamental Period: Ta: 0.3119
R-Factor: 3.50
Overstrength Factor: Omega: 3.00
Deflection Amplification Factor: Cd: 3.00
Base Shear: V: 0.1523 x W

Longitudinal Direction Parameters
Ordinary Steel Moment Frames
Redundancy Factor: Rho: 1.30
Fundamental Period: Ta: 0.3119
R-Factor: 3.50
Overstrength Factor: Omega: 3.00
Deflection Amplification Factor: Cd: 3.00
Base Shear: V: 0.1523 x W

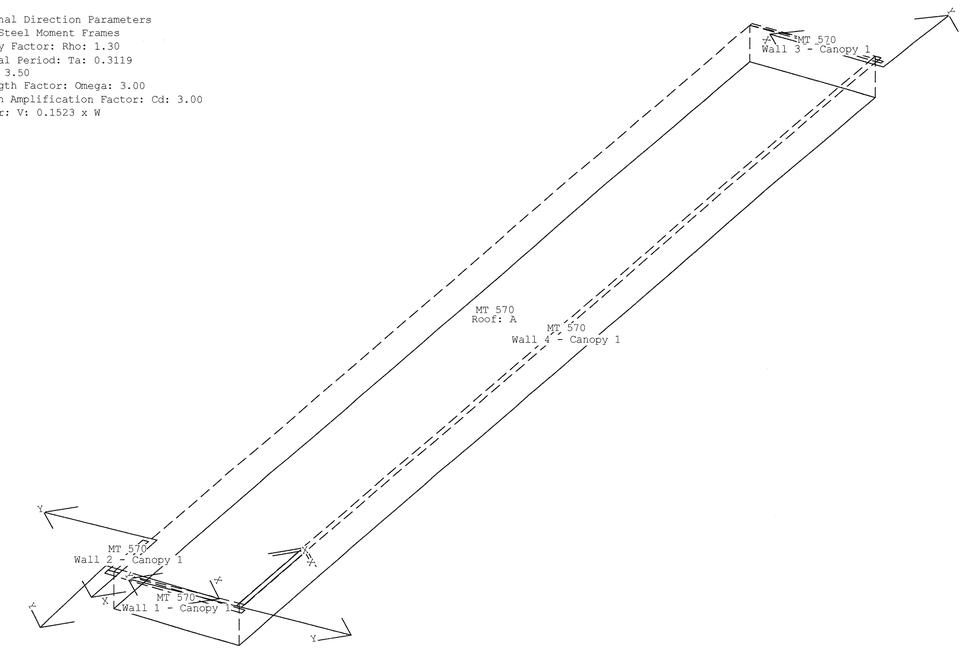

2019CBC
City of Madera
Building Department
The approval of these plans does not prevent the City of Madera from requiring the correction of errors or omissions in the plans, specifications, construction or otherwise in violation of any ordinance or state law. Approval of Codes and Ordinances
APPROVED
By:
Date: MAR 03 2022

REGISTERED PROFESSIONAL ENGINEER KEITH ERICK FIP C 61044 STATE OF CALIFORNIA

FOR CONSTRUCTION

09/21/2021

MODIFIED IN AUTOCAD

THE VP ENGINEER'S SEAL APPLIES ONLY TO THE WORK PRODUCT OF VP AND DESIGN AND PERFORMANCE REQUIREMENTS SPECIFIED BY VP. THE VP ENGINEER'S SEAL DOES NOT APPLY TO THE PERFORMANCE OR DESIGN OF ANY OTHER PRODUCT OR COMPONENT FURNISHED BY VP EXCEPT TO ANY DESIGN OR PERFORMANCE REQUIREMENTS SPECIFIED BY VP.

THIS DRAWING, INCLUDING THE INFORMATION HEREON, REMAINS THE PROPERTY OF VP BUILDINGS. IT IS PROVIDED SOLELY FOR ERECTING THE BUILDING DESCRIBED IN THE APPLICABLE PURCHASE ORDER AND MAY BE REPRODUCED ONLY FOR THAT PURPOSE. IT SHALL NOT BE MODIFIED, REPRODUCED OR USED FOR ANY OTHER PURPOSE WITHOUT PRIOR WRITTEN APPROVAL OF VP BUILDINGS.

THE GENERAL CONTRACTOR AND/OR ERECTOR IS SOLELY RESPONSIBLE FOR ACCURATE GOOD QUALITY WORKMANSHIP IN ERECTING THIS BUILDING IN ACCORDANCE WITH THIS DRAWING, DETAILS REFERENCED IN THIS DRAWING, ALL APPLICABLE VP BUILDINGS ERECTION GUIDES, AND INDUSTRY STANDARDS PERTAINING TO PROPER ERECTION, INCLUDING THE CORRECT USE OF TEMPORARY BRACING.

D

VP Buildings
3200 Players Club Circle Memphis TN 38125

REV	DATE	BY	DESCRIPTION

NTS

CODES AND LOADS

BUILDER	DBKO Design + Build
CUSTOMER	Madera WH Building A
LOCATION	Madera, California
PROJECT	MT 1 Building A
BUILDERS PO#	

VP BUILDINGS VARCO PRUDEN
A BlueScope Steel Company
VPC VERSION: 2021.2

JOBNO	21-008734-01
DATE	7/8/2021
DRAWN/CHECK	KJJ
PAGE	2

a division of BlueScope Buildings North America, Inc.

FILENAME: C:\Users\krjones\OneDrive - BlueScope\Building Files\21-008734-01\MT 1_CODES AND LOADS.dwg SAVE DATE: 7/8/2021 SAVE TIME: 19:38:47 LAST SAVED BY: krjones

BUILDER/CONTRACTOR RESPONSIBILITIES

VP Buildings follows the guidelines as outlined in the AISC and MBMA Codes of Standard Practice. VP Buildings standard product specifications, design, fabrication, quality criteria shall govern all work unless stipulated otherwise in the contract documents. In case of discrepancies between VP Buildings structural plans and plans for other trades, VP Buildings structural plans shall govern.

It is the responsibility of the Builder to obtain approvals and permits from all governing agencies and jurisdictions as required. Approval of VP Buildings drawings constitutes the builders acceptance of VP interpretation of the contract purchase order. Unless specific design criteria concerning interface design and details are furnished as part of the contract, VP Buildings design assumptions shall govern.

VP engineers are not Project Engineers or Engineer of Record for the overall project. VP engineering supply sealed engineering design data and drawings for VP supplied material as part of the overall project for use by others to obtain permits, approvals, and coordinate with other trades. All interface and/or compatibility of any materials not furnished by VP are to be considered and coordinated by the builder or A/E firm.

CONSTRUCTION & ERECTION RESPONSIBILITY

The Builder is responsible for construction in strict accordance with VP Buildings "FOR CONSTRUCTION" drawings and all applicable product installation guides. VP is not responsible for work done from any other VP drawings that are not marked "FOR CONSTRUCTION", nor any drawings prepared by others.

As erected field assemblies of members shall be as specified in MBMA Code of Standard Practice (in Canada - CSA S16), which require L/500 tolerance of installed members. Occasional field work including shimming, cutting, coping, and drilling for final fit-up are considered part of erection. Specified field work and field welding conditions indicated on these drawings shall also be included in the erectors scope of work. See Erection Guide for shimming procedure. For building with top riding bridge cranes see Crane Data drawing for column plumb tolerance.

The building erector shall be properly licensed and experienced in erecting metal building systems. The Builder is responsible for having knowledge of, and shall comply with, all OSHA requirements and all other governing site safety criteria. The builder is responsible for designing, supplying, locating and installing temporary supports and bracing during erection of the building. VP bracing is designed for code required loads after building completion and shall not be considered as adequate erection bracing. See Erection Guide.

Shimming of steel buildings during erection may be required to accomodate allowable tolerances during fabrication and erection. Special care should be taken by the building erector to shim connections where key dimensions must be maintained for building performance as even small tolerances can have a significant impact on critical dimensions such as height, clearances and plumbness, especially as the size of the member or building increases. Conditions where shimming should be expected can include but are not limited to large door openings, critical clear height requirements, cranes, buildings greater than 45 feet in height, clear spans greater than 125 feet and adjacent frames with different characteristics (like clear span frames adjacent to an endwall or modular frame). Shims are normally provided by the erector, but may be ordered upon request by contacting your Project Manager.

EXISTING STRUCTURES

VP must be advised of any structure that is within 20 ft. of VP's building. Load effects from snow drifting, wind effects, and seismic separation must be considered for both the new and existing structures. VP has designed the new VP building for these effects. The owner/builder are responsible for employing a Professional Engineer to review and verify the existing structure for all load effects from the adjacent VP building.

BRACING

Tension brace rods work in pairs to balance forces caused by initial tensioning. Care must be taken while tightening brace rods so as not to cause accidental or misalignment of components. All rods must be installed loose and then tightened. Rods should not exhibit excessive sag. For long or heavy rods, or angles it may be necessary to support the rods at mid-bay by suspending them from secondary members.

Bracing for seismic or wind loading of objects or equipment that are not a part of the VP structure must be designed by a qualified professional to deliver lateral loads to primary frames and rod bracing struts. Equipment bracing and suspension connections must not impose torsion or minor axis loads, or cause local distortion in any VP components. VP accepts no responsibility for design or installation of bracing systems not furnished by VP.

FIELD WELDING

All field welding shall be done at the direction of a design professional, and done in accordance with governing requirements (AWS in USA, CWB in Canada) by welders qualified to perform the welding as directed by the applicable welding procedure specification (WPS). A WPS shall be prepared by the contractor for each welding variation specified. The contractor is responsible for any special welding inspection as required by local jurisdiction. Filler metal shall be 70 ksi (480 MPa) tensile strength. For welds in high seismic force resisting system (Seismic Cat D, E or F), minimum Charpy V-Notch toughness shall meet AISC-341 criteria (20 ft-lbs min @ 0Deg F). Interpass temperatures shall not exceed 550Deg F (300Deg C).

DELIVERIES

It is the responsibility of the builder to have adequate equipment available at the job site to unload trucks in a safe and timely manner. The Builder will be responsible for all retention charges from carriers as a result of job site unloading delays.

SIGNAGE

The Builder is responsible for furnishing signs as required by Code and the Building Department, including but not limited to, exits, occupancy limits, floor loading limits, and bulk storage limits. Floor loading signs shall clearly indicate maximum floor live load permitted.
Bulk storage facilities shall have signs clearly posted on all loaded walls indicating the type of commodity stored and the maximum storage height. Signs shall be clearly visible when building is fully loaded to design level. Overloading of floors or walls may result in failure.

Claims for damage or shorts MUST be noted on the Bill-of-Lading or delivery receipt and filed against the carrier by the consignee as per VP's Terms of Sales (F.O.B. Plant) under the Uniform Commercial Code. It is critical that damages or shorts be noted on the Bill-of-Lading or you have little recourse with the carrier. Immediately upon delivery of material, material quantities are verified by the Builder against quantities billed on the shipping document. Neither the Manufacturer nor the carrier is responsible for material shortages against quantities billed on the shipping document if such shortages are not noted on the shipping documents upon delivery of material and acknowledged by the carriers agent. For materials concealed in bundles, boxes, or crates, shortages must be reported immediately upon unpacking. Should products get wet, bundled and crated materials must be unpacked and unbundled immediately to provide drainage of trapped moisture. See Erection Guide for proper job site storage procedure.

SEALANTS

Sealants shall be applied in strict accordance with VP details or weather tightness will be compromised. Sealant must be applied in temperatures and weather conditions consistent with labeling.

INDEPENDENT MEZZANINES

Independent mezzanines must be designed by a professional engineer. The engineer must ensure that proper isolation from the VP building has been provided to avoid structural damage due to differential movements, or inadvertently apply loads to the VP structure. VP accepts no responsibility for the design of the independent mezzanine.

FIRE CODE COMPLIANCE

It is the responsibility of the project design professional and builder to comply with local fire code regulations including consideration of, but not limited to, building use and occupancy, all building construction materials, separation requirements, egress requirements, fire protection systems, etc. Builder shall advise VP of any special requirements to be furnished by VP.

FIELD MODIFICATIONS

Modifications to this building from details and instructions contained on these drawings must be approved in writing by VP Buildings engineers, or other licensed structural engineer. This includes, but is not limited to, removal of roof or wall cladding, removing or moving any flange braces or rod braces, cutting of openings for doors, windows or RTU's, correction of fabrication errors, etc. The owner shall not impose loads to this structure beyond what is specified for this building in the contract documents. VP Buildings accepts no responsibility for the consequences of any unauthorized additions, alterations, or added loads to this structure.

If the builder intends to invoice VP Buildings for modifications in excess of $1000, The builder must notify VP Buildings immediately, and obtain a Work Authorization from VP Buildings prior to proceeding. All final claims must be submitted to VP Buildings with all supporting documentation within 30 days of the building completion. Claims submitted without work authorizations, or after 30 days will not be accepted. Correction of minor misfits, shimming and plumbing, moderate amount of reaming, drilling, chipping / cutting and minor welding are considered by Code of Standard Practice to be part of erection are not subject to claim reimbursement.

CONCRETE/MASONRY/CONVENTIONAL STUD WALLS

The engineer responsible for the design of the wall system is responsible for coordinating with, or specifying to VP Buildings, any wall to steel compatibility issues such as drift and deflection compatibility, special base details, and wall to VP steel connections. All fasteners, sealant and counter flashing of wall systems are to be provided by contractor. The engineer responsible for the wall shall design the anchorage to VP supporting elements consistent with Code required forces.

PANELS

Oil canning is an inherent characteristic of cold formed steel panels. It is the result of several factors that include induced stresses in the raw material delivered to VP, fabrication methods, installation procedures, and post installation thermal forces. Thru fastened panels will exhibit some dimpling when installed, especially when insulation is installed between panels and secondary supports. Dimpling can be minimized by careful installation, taking care not to over drive fasteners.

Roof rumble is a phenomenon that is caused by wind gusts lifting up on the roof panels and then springing back into place. All panels experience this action to some degree, especially with concealed clip Standing Seam panels. Roof rumble noise may be minimized by providing a layer of blanket insulation between the panels and any hard support surface such as steel secondary members, substrates such as plywood, steel decking, or rigid board insulation. A minimum of 3 inch thick blanket is recommended over steel secondary members, or 2 inch over substrates.

Oil canning, dimpling, and roof rumble do not affect the structural integrity or weather tightness of the panels and is not grounds for rejection of panels.

The Standing Seam joint detail is designed with an interlocking feature for ease of installation. However, it is imperative that installed Standing Seam panels be secured to the secondary structural members and properly seamed prior to departure from the job site each day.

SKYLIGHTS

Local building departments may require added fall restraint due to conditions that may affect the skylight structural integrity. It is the responsibility of the builder to determine and provide any added fall restraint under the skylight as may be required by your building department.

RAIN WATER RUNOFF

Drainage systems must be designed by the project professional to comply with code requirements. VP is not responsible for drainage designs, overflow scuppers, down piping, etc. The project professional and contractor are responsible to ensure that primary drains and overflow devices such as scuppers and auxiliary drains are provided as required for the required rain intensity at the building perimeter and at valley conditions to prevent ponding.

STEEL SHOP COAT

The purpose of VP's shop coat is to provide protection for the steel members during transportation, during temporary job site storage and during erection. Standard shop formulation is not designed to perform as a finish coat when exposed to environmental conditions. Members shall be kept free of the ground and properly drained during job site storage. It is the Builder's responsibility to ensure that if a finish coat is being applied over VP shop coat that the painting contractor verifies compatibility between his finish coat and VP's shop coat.

VP BUILDINGS ACCREDITATIONS AND APPROVALS

Fabricator Approvals

IAS AC472 Approvals: (www.iasonline.org/services/metal-building-inspection)
Listed under BlueScope Buildings North America, Inc.
City of Los Angeles, CA #FB00031; City of Houston, TX 767 & 429;
City of Phoenix, AZ C19-02008; Clark County, NV 43 & 833, San Bernardino County, CA 289
State of Utah, City of Richmond, CA.

Design Approvals

IAS AC472 Approvals: (www.iasonline.org/services/metal-building-inspection)
Listed under Varco Pruden Buildings, a Division of BlueScope Buildings North America, Inc.

Canadian CSA A660 Certifications

(www.cwbgroup.org)
Listed under BlueScope Buildings North America, Inc.

Engineering Certifications of Authorization

USA--AR#576; FL#30427; ID#C-2470; IL#184-002649; KS#E-29; MS#E-0592;
MO#E-2010007736; NC#F-0998; OK#CA4170PE; SD#C-1787; TX#F4828; WV#C03059-00;
CAN--AB#P08900; NS#30123; ON#100148796; and YT#PP134

ICC Evaluation Reports (www.icc-es.org)

SSR Roof System - #ESR-2527

State of Florida Product Approvals (www.floridabuilding.org)

Approved Products Listed Under VP Buildings, Inc.

VP TextureClad - See Transamerican Structuroc, Inc.

Dade Co. Product Approval (www.miamidade.gov/buildingcode)

Approved Products Listed Under Varco Pruden Buildings, Inc.

VP TextureClad - See Transamerican Structuroc, Inc.

Underwriter's Laboratory Approvals (Available only when specified in contract)

SSR Roof-UL#TGKX-113; SSR Composite Roof Class 90-UL#TGKX-113A;

SSR Roof w/Super Block; Class 90-UL#TGKX-328;

Panel Rib Roof UL Class 60-UL#TGKX-60; Panel Rib Roof UL Class 90-UL#TGKX-64;

VP SLR II Roof Class 90-UL#TGKX-90, -180, -435, -435A, -176, -238, -238A, -238B

Factory Mutual Approved Assemblies (Available only when specified in contract)

SSR Roof Systems are approved in various type applications and listed in FM Approval Guide.

24 Ga SSR (0.0227" Nominal), is available in Class 1-60, 1-75, 1-90. 22Ga SSR (0.0277" Nominal), is available in Class 1-75, 1-90-, 1-120.

SLR II Roof Systems are approved in various type applications and listed in FM Approval Guide.

24 Ga SLR II (0.0227" Nominal), is available in Class 1-75 and 1-120.

2019CBC
City of Madera
Building Department
The approval of these plans does not prevent the City of Madera from requiring correction of errors or omissions in the plans, specifications or construction. Subject to field inspections and approvals. Laws, Codes and Ordinances
APPROVED
By:
Date: MAR 0 3 2022

REGISTERED PROFESSIONAL ENGINEER
KEITH ERICK FIX
C 61044
STATE OF CALIFORNIA

09/21/2021

FOR CONSTRUCTION

THE VP ENGINEER'S SEAL APPLIES ONLY TO THE WORK PRODUCT OF VP AND DESIGN AND PERFORMANCE REQUIREMENTS SPECIFIED BY VP. THE VP ENGINEER'S SEAL DOES NOT APPLY TO THE PERFORMANCE OR DESIGN OF ANY OTHER PRODUCT OR COMPONENT FURNISHED BY VP EXCEPT TO ANY DESIGN OR PERFORMANCE REQUIREMENTS SPECIFIED BY VP.

THIS DRAWING, INCLUDING THE INFORMATION HEREON, REMAINS THE PROPERTY OF VP BUILDINGS. IT IS PROVIDED SOLELY FOR ERECTING THE BUILDING DESCRIBED IN THE APPLICABLE PURCHASE ORDER AND MAY BE REPRODUCED ONLY FOR THAT PURPOSE. IT SHALL NOT BE MODIFIED, REPRODUCED OR USED FOR ANY OTHER PURPOSE WITHOUT PRIOR WRITTEN APPROVAL OF VP BUILDINGS.

THE GENERAL CONTRACTOR AND/OR ERECTOR IS SOLELY RESPONSIBLE FOR ACCURATE GOOD QUALITY WORKMANSHIP IN ERECTING THIS BUILDING IN ACCORDANCE WITH THIS DRAWING, DETAILS REFERENCED IN THIS DRAWING, ALL APPLICABLE VP BUILDINGS ERECTION GUIDES, AND INDUSTRY STANDARDS PERTAINING TO PROPER ERECTION, INCLUDING THE CORRECT USE OF TEMPORARY BRACING.

D

VP Buildings
3200 Players Club Circle Memphis TN 38125

REV	DATE	BY	DESCRIPTION

NTS

7/8/2021 19:29:04

ERECTION NOTES

BUILDER	DBKO Design + Build
CUSTOMER	Madera WH Building A
LOCATION	Madera, California
PROJECT	MT 1 Building A
BUILDERS PO#	
FILENAME:	MT 1

VP BUILDINGS
VARCO PRUDEN
A BlueScope Steel Company
VPC VERSION: 2021.2

JOBNO	21-008734-01
DATE	7/8/2021
DRAWN/CHECK	KJJ
PAGE	3

a division of BlueScope Buildings North America, Inc.

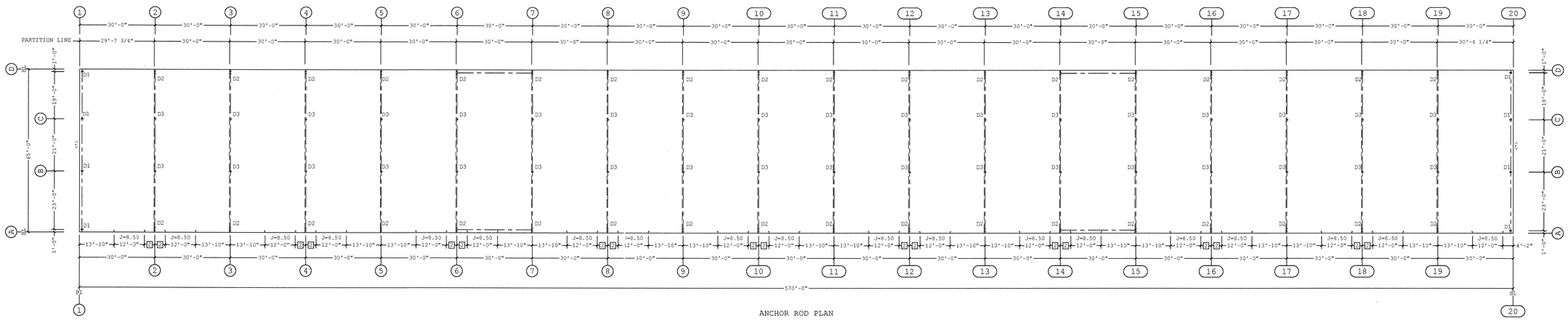

ANCHOR ROD PLAN

2 4'-2"

Dimension Key

Finished Floor Elevation = 100'-0" (Unless Noted Otherwise)

2019CBC
City of Madera
Building Department
The approval of these plans does not prevent the City of Madera from requiring correction of errors or omissions in the plans, specifications or construction. Submittal of plans, specifications and approval of them does not authorize violations of any codes and ordinances.
APPROVED
By:
Date: MAR 03 2022

REGISTERED PROFESSIONAL ENGINEER
KEITH ERICK TAN
C 61044
STATE OF CALIFORNIA

FOR CONSTRUCTION

09/21/2021

<*> THE BUILDING IS DESIGNED WITH BRACING DIAGONALS IN THE DESIGNATED BAYS. COLUMN BASE REACTIONS, BASE PLATES AND ANCHOR RODS ARE AFFECTED BY THIS BRACING AND DIAGONALS MAY NOT BE RELOCATED WITHOUT CONSULTING THE BUILDING SUPPLIERS ENGINEER.

THE VP ENGINEER'S SEAL APPLIES ONLY TO THE WORK PRODUCT OF VP AND DESIGN AND PERFORMANCE REQUIREMENTS SPECIFIED BY VP. THE VP ENGINEER'S SEAL DOES NOT APPLY TO THE PERFORMANCE OR DESIGN OF ANY OTHER PRODUCT OR COMPONENT FURNISHED BY VP EXCEPT TO ANY DESIGN OR PERFORMANCE REQUIREMENTS SPECIFIED BY VP.

THIS DRAWING, INCLUDING THE INFORMATION HEREON, REMAINS THE PROPERTY OF VP BUILDINGS. IT IS PROVIDED SOLELY FOR ERECTING THE BUILDING DESCRIBED IN THE APPLICABLE PURCHASE ORDER AND MAY BE REPRODUCED ONLY FOR THAT PURPOSE. IT SHALL NOT BE MODIFIED, REPRODUCED OR USED FOR ANY OTHER PURPOSE WITHOUT PRIOR WRITTEN APPROVAL OF VP BUILDINGS.

THE GENERAL CONTRACTOR AND/OR ERECTOR IS SOLELY RESPONSIBLE FOR ACCURATE GOOD QUALITY WORKMANSHIP IN ERECTING THIS BUILDING IN ACCORDANCE WITH THIS DRAWING, DETAILS REFERENCED IN THIS DRAWING, ALL APPLICABLE VP BUILDINGS ERECTION GUIDES, AND INDUSTRY STANDARDS PERTAINING TO PROPER ERECTION, INCLUDING THE CORRECT USE OF TEMPORARY BRACING.

D

VP Buildings
3200 Players Club Circle Memphis TN 38125

REV	DATE	BY	DESCRIPTION

NTS

ANCHOR ROD PLAN

BUILDER	DBKO Design + Build
CUSTOMER	Madera WH Building A
LOCATION	Madera, California
PROJECT	MT 1 Building A
BUILDERS PO#	

VP BUILDINGS
VARCO PRUDEN
A BlueScope Steel Company
VPC VERSION: 2021.2

JOBNO	21-008734-01
DATE	7/8/2021
DRAWN/CHECK	KJJ
PAGE	4

a division of BlueScope Buildings North America, Inc.

MODIFIED IN AUTOCAD

FILENAME: C:\Users\krjones\OneDrive - BlueScope\Building Files\21-008734-01\MT 1_ANCHOR ROD PLAN.dwg

SAVE DATE: 7/9/2021 SAVE TIME: 09:42:03 LAST SAVED BY: krjones

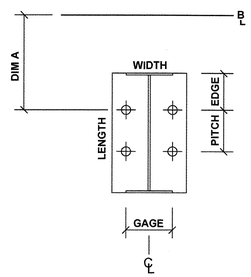

D1 (4)3/4" Dia. GR36 Anchor Rods
Plate W=8" L=8 1/2"
Dim: A=10 1/4"
Gage=5" Pitch=5" Edge Out=1 3/4"
Elev.=100'-0"

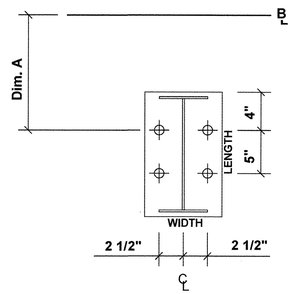

D2 (4)3/4" Dia. GR36 Anchor Rods
Plate W=8" L=1'-1"
Dim: A=1'-0"
Elev.=100'-0"

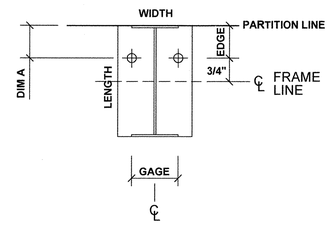

D3 (2)3/4" Dia. GR36 Anchor Rods
Plate W=8" L=8 1/2"
Dim: A=3 1/2"
Gage=5" Edge Out=3 1/2"
Elev.=100'-0"

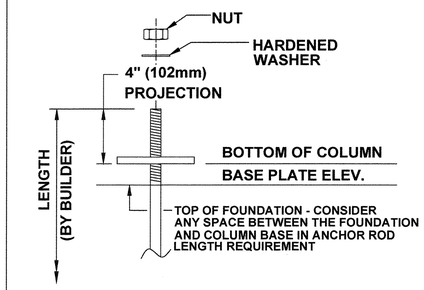

THE 4" PROJECTION ABOVE THE BOTTOM OF THE BASE PLATE IS A SUGGESTED MINIMUM TO ENSURE ADEQUATE ANCHOR ROD LENGTH. A DIFFERENT PROJECTION MAY BE REQUIRED BY THE FOUNDATION DESIGNER.

THE ANCHOR ROD PROJECTION MAY NEED TO BE CUT OFF IF THERE IS INTERFERENCE WITH OTHER PARTS.

SUGGESTED ANCHOR ROD PROJECTION

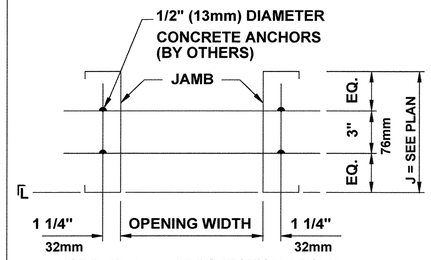

NOTE: 1" (25mm) PROJECTION ABOVE BOTTOM OF JAMB CLIP

SEE PLAN FOR JAMB SIZES : J = SIZE

JAMB 'EQ.' VALUES:

7 EQ = 2" 51mm, 8.5 EQ = 2 3/4" 70mm

10 EQ = 3 1/2" 89mm, 11.5 EQ = 4 1/4" 108mm

FRAMED OPENING DETAIL

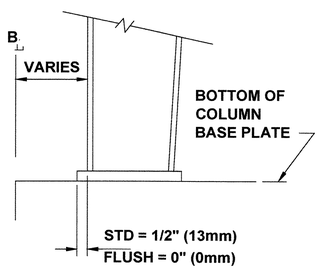

TYPICAL COLUMN BASE PLATE DETAIL

1. ANCHOR RODS, NUTS, HARDENED WASHERS AND ANY OTHER EMBEDDED ITEMS ARE TO BE FURNISHED BY CONTRACTOR.
2. ANCHOR ROD DIAMETERS WERE DETERMINED BY ALLOWABLE SHEAR AND TENSION PER AISC SPECIFICATIONS (FY=36KSI). (ASTM F1554 GRADE 36) ANCHOR ROD LENGTH, EFFECTS OF EMBEDDED ANCHOR ROD EDGE DIMENSIONS AND METHOD OF TRANSFERRING FORCES FROM ANCHOR RODS TO FOOTINGS ARE TO BE DETERMINED BY OTHERS.
3. UNLESS OTHERWISE SPECIFIED, ANCHOR RODS ARE DESIGNED AND DETAILED AS "CAST-IN-PLACE" ANCHOR RODS WITH "SNUG TIGHT" CONNECTIONS.
4. FOUNDATION MUST BE LEVEL, SQUARE AND SMOOTH. ANCHOR RODS MUST BE ACCURATELY PLACED AS SHOWN ON THIS DRAWING OR STEEL WILL NOT FIT. THE BUILDER IS RESPONSIBLE FOR ACCURATE SETTING OF ANCHOR RODS PER AISC CODE OF STANDARD PRACTICE, SEC 7.5 VARIATIONS ARE SUMMARIZED BELOW;
   a. CENTERS OF ANY TWO AR'S WITHIN A COLUMN BASE GROUP; +-1/8"
   b. CENTERS OF ADJACENT AR GROUPS; +-1/4"
   c. TOPS OF AR'S; +-1/2"
   d. ACCUMULATED DIM BETWEEN CENTERS OF AR GROUPS ALONG COLUMN LINE; +-1/4" PER 100FT., NOT TO EXCEED 1" TOTAL.
   e. DIM FROM CENTER OF ANY AR GROUP FROM COLUMN LINE; +-1/4"
5. DESIGN LOADS AND REACTIONS ARE FURNISHED IN THE REACTIONS REPORT.

2019CBC
City of Madera
Building Department
The approval of these plans does not prevent the City of Madera from requiring correction of errors or omissions in the plans, specifications or construction. Subsequent plan reviews and approvals are subject to all laws, codes and ordinances in effect.
APPROVED
By:
Date: MAR 03 2022

REGISTERED PROFESSIONAL ENGINEER
KEITH ERICK FIX
C 61044
STATE OF CALIFORNIA

Finished Floor Elevation = 100'-0" (Unless Noted Otherwise)

FOR CONSTRUCTION

09/21/2021

<*> THE BUILDING IS DESIGNED WITH BRACING DIAGONALS IN THE DESIGNATED BAYS. COLUMN BASE REACTIONS, BASE PLATES AND ANCHOR RODS ARE AFFECTED BY THIS BRACING AND DIAGONALS MAY NOT BE RELOCATED WITHOUT CONSULTING THE BUILDING SUPPLIERS ENGINEER.

THE VP ENGINEER'S SEAL APPLIES ONLY TO THE WORK PRODUCT OF VP AND DESIGN AND PERFORMANCE REQUIREMENTS SPECIFIED BY VP. THE VP ENGINEER'S SEAL DOES NOT APPLY TO THE PERFORMANCE OR DESIGN OF ANY OTHER PRODUCT OR COMPONENT FURNISHED BY VP EXCEPT TO ANY DESIGN OR PERFORMANCE REQUIREMENTS SPECIFIED BY VP.

THIS DRAWING, INCLUDING THE INFORMATION HEREON, REMAINS THE PROPERTY OF VP BUILDINGS. IT IS PROVIDED SOLELY FOR ERECTING THE BUILDING DESCRIBED IN THE APPLICABLE PURCHASE ORDER AND MAY BE REPRODUCED ONLY FOR THAT PURPOSE. IT SHALL NOT BE MODIFIED, REPRODUCED OR USED FOR ANY OTHER PURPOSE WITHOUT PRIOR WRITTEN APPROVAL OF VP BUILDINGS.

THE GENERAL CONTRACTOR AND/OR ERECTOR IS SOLELY RESPONSIBLE FOR ACCURATE GOOD QUALITY WORKMANSHIP IN ERECTING THIS BUILDING IN ACCORDANCE WITH THIS DRAWING, DETAILS REFERENCED IN THIS DRAWING, ALL APPLICABLE VP BUILDINGS ERECTION GUIDES, AND INDUSTRY STANDARDS PERTAINING TO PROPER ERECTION, INCLUDING THE CORRECT USE OF TEMPORARY BRACING.

D

VP Buildings
3200 Players Club Circle Memphis TN 38125

REV	DATE	BY	DESCRIPTION

NTS

ANCHOR ROD PLAN

BUILDER	DBKO Design + Build
CUSTOMER	Madera WH Building A
LOCATION	Madera, California
PROJECT	MT 1 Building A
BUILDERS PO#	

VP BUILDINGS
VARCO PRUDEN
A BlueScope Steel Company
VPC VERSION: 2021.2

JOBNO	21-008734-01
DATE	7/8/2021
DRAWN/CHECK	KJJ
PAGE	5

a division of BlueScope Buildings North America, Inc.

MODIFIED IN AUTOCAD

FILENAME: C:\Users\krjones\OneDrive - BlueScope\Building Files\21-008734-01\MT 1_ANCHOR ROD PLAN DETAILS.dwg

SAVE DATE: 7/9/2021 SAVE TIME: 14:17:52 LAST SAVED BY: krjones

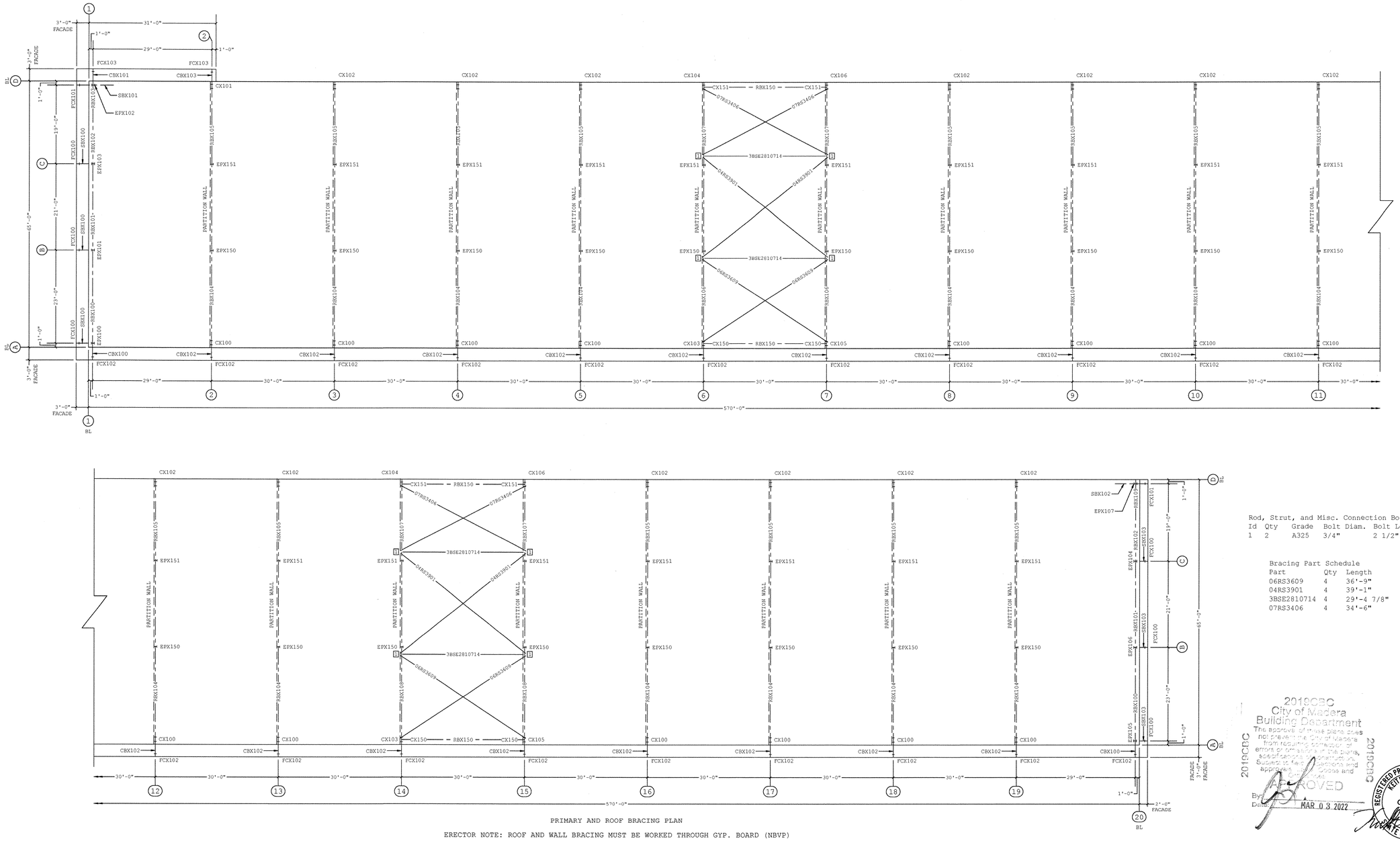

PRIMARY AND ROOF BRACING PLAN

ERECTOR NOTE: ROOF AND WALL BRACING MUST BE WORKED THROUGH GYP. BOARD (NBVP)

Rod, Strut, and Misc. Connection Bolts

Id	Qty	Grade	Bolt Diam.	Bolt Length	PartNo
1	2	A325	3/4"	2 1/2"	0097284

Bracing Part Schedule

Part	Qty	Length	Detail
06RS3609	4	36'-9"	BR01G2
04RS3901	4	39'-1"	BR01G2
3BSE2810714	4	29'-4 7/8"	BR15L1
07RS3406	4	34'-6"	BR01G2

2019CBC
City of Madera
Building Department
The approval of these plans does not prevent the City of Madera from requiring correction of errors or omissions in the plans, specifications or construction. Subject to field inspections and approval of finished work and occupancy.
APPROVED
By
Date MAR 03 2022

REGISTERED PROFESSIONAL ENGINEER
KEITH ERICK FIX
C 61044
STATE OF CALIFORNIA

Shape Name = MT 570

FOR CONSTRUCTION

09/21/2021

1. USE 1/2 X 1 1/2 A325T BOLT (49080) AND NUT (47120) W/O WASHERS. SNUG TIGHTEN BOLTS FOR ALL SECONDARY CONNECTIONS, SECONDARY CLIP CONNECTIONS, AND FLANGE BRACE CONNECTIONS, UNLESS NOTED OTHERWISE.
2. SLOT REINFORCEMENT PLATES NEED NOT BE LOCATED ON THE SAME SIDE OF THE WEB AS THE HILLSIDE WASHER.

MODIFIED IN AUTOCAD

THE VP ENGINEER'S SEAL APPLIES ONLY TO THE WORK PRODUCT OF VP AND DESIGN AND PERFORMANCE REQUIREMENTS SPECIFIED BY VP. THE VP ENGINEER'S SEAL DOES NOT APPLY TO THE PERFORMANCE OR DESIGN OF ANY OTHER PRODUCT OR COMPONENT FURNISHED BY VP EXCEPT TO ANY DESIGN OR PERFORMANCE REQUIREMENTS SPECIFIED BY VP.

THIS DRAWING, INCLUDING THE INFORMATION HEREON, REMAINS THE PROPERTY OF VP BUILDINGS. IT IS PROVIDED SOLELY FOR ERECTING THE BUILDING DESCRIBED IN THE APPLICABLE PURCHASE ORDER AND MAY BE REPRODUCED ONLY FOR THAT PURPOSE. IT SHALL NOT BE MODIFIED, REPRODUCED OR USED FOR ANY OTHER PURPOSE WITHOUT PRIOR WRITTEN APPROVAL OF VP BUILDINGS.

THE GENERAL CONTRACTOR AND/OR ERECTOR IS SOLELY RESPONSIBLE FOR ACCURATE GOOD QUALITY WORKMANSHIP IN ERECTING THIS BUILDING IN ACCORDANCE WITH THIS DRAWING, DETAILS REFERENCED IN THIS DRAWING, ALL APPLICABLE VP BUILDINGS ERECTION GUIDES, AND INDUSTRY STANDARDS PERTAINING TO PROPER ERECTION, INCLUDING THE CORRECT USE OF TEMPORARY BRACING.

D

VP Buildings
3200 Players Club Circle Memphis TN 38125

REV	DATE	BY	DESCRIPTION

NTS

PRIMARY AND ROOF BRACING PLAN

BUILDER	DBKO Design + Build
CUSTOMER	Madera WH Building A
LOCATION	Madera, California
PROJECT	MT 1 Building A
BUILDERS PO#	

VP BUILDINGS
VARCO PRUDEN
A BlueScope Steel Company
VPC VERSION: 2021.2c

JOBNO	21-008734-01
DATE	9/16/2021
DRAWN/CHECK	ADP ADP
PAGE	6

a division of BlueScope Buildings North America, Inc.

FILENAME: C:\Users\ADPritchett\OneDrive - BlueScope\Check Jobs\21-008734\Final\2_Frames\6_MT 1_PRIMARY AND ROOF BRACING PLAN.dwg

SAVE DATE: 9/16/2021 SAVE TIME: 11:17:16 LAST SAVED BY: ADPritchett